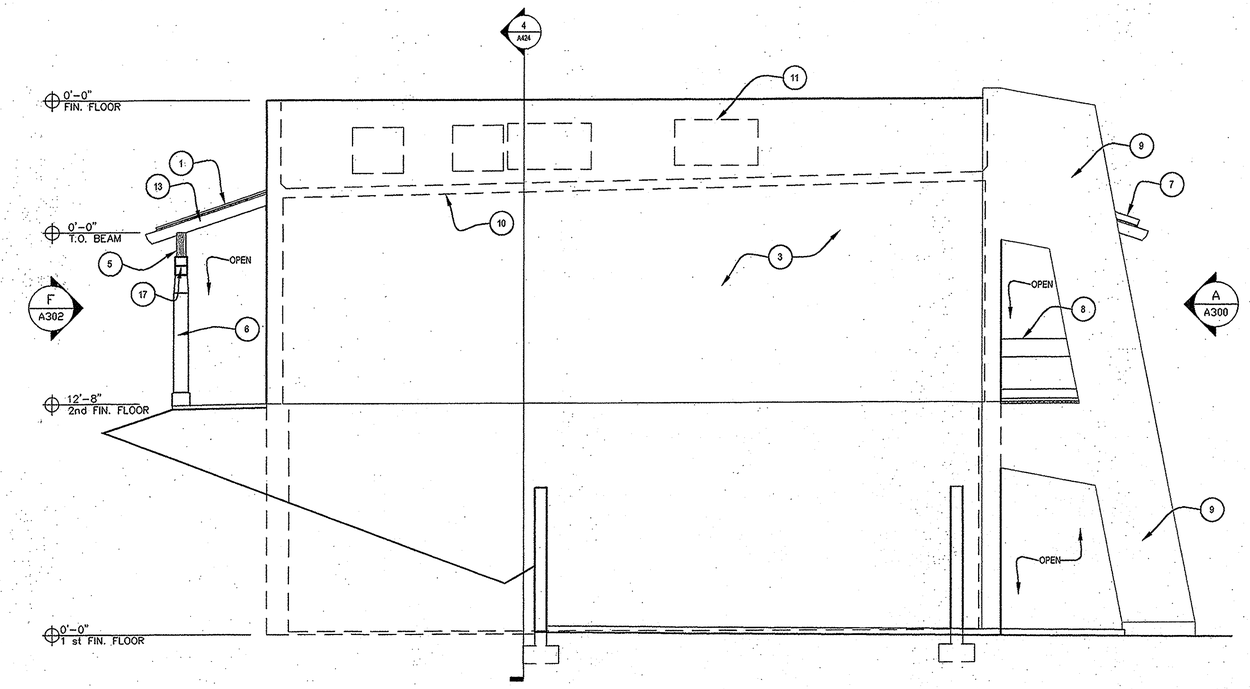

G ELEVATIONS
SCALE 1/4"=1'-0"

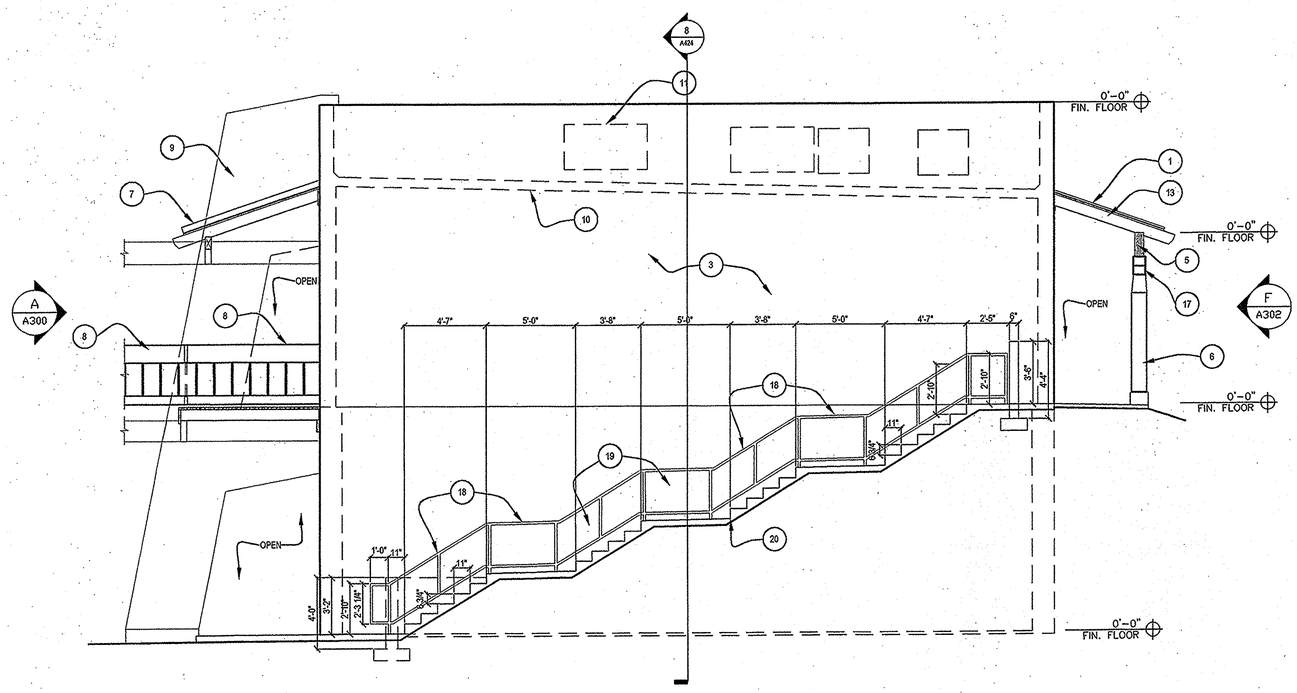

H ELEVATIONS
SCALE 1/4"=1'-0"

KEYNOTES

1. GALVANIZED METAL ROOFING WITH EXPOSED FASTNERS
2. CUSTOM WOOD DOOR WITH HOLLOW METAL FRAME
3. 5/8" TWO COAT STUCCO OVER CMU
4. WOOD SLIDING GLASS DOOR
5. ENGINEERED WOOD BEAMS - SEE STRUCTURAL
6. PEELED 10" DIA. WOOD COLUMNS
7. 4" DIA. PEELED WOOD LOGS
8. 2x12 TOP RAIL WITH 2x6 BOTTOM RAIL & 1x10 SLATS CONTINUOS
9. STUCCO OVER 5/8" PLYWOOD ON 2"x4" WOOD FRAMING
10. ROOF AND FLOOR LINES
11. HVAC UNITS ON ROOF
12. STUCCO ON 5/8" PLYWOOD ON 2"x6" WOOD FRAMING
13. WOOD RAFTERS - SEE WALL SECTIONS
14. CLAD WOOD WINDOWS
15. 2"x12" ROUGH SAWN TRIM BOARD
16. ROUGH SAWN WOOD BEAM
17. ROUGH SAWN WOOD CORBAL
18. 1 1/2" DIA. STEEL PIPE HANRAILS
19. EXPANDED METAL GUARD BETWEEN HANDRAILS
20. CONCRETE STAIRS ON GRADE

1 KEYNOTES
NTS

Amrhein Design Group
Design Group
Architecture, Planning, Inc. Suite 108 A 602-922-0031
Phoenix, Arizona 85016 Fax 602-922-0031

arcone associates, LLC
2715 N. 3rd STREET, PHOENIX, ARIZONA 85004
Phone 602.241.7871 / Fax 602.241.7874
E-mail rochieria@cox.net

REGISTERED ARCHITECT
CERTIFICATE
12821
RICHARD D. OEHLER
Date Signed
ARIZONA, U.S.A.

date: 4/26/03

A COMMERCIAL DEVELOPMENT FOR
SAINT MICHAEL'S PLAZA
PARCEL 216-07-004A
6975 EAST CAVE CREEK ROAD
CAVE CREEK ARIZONA 85331
480 488 5261 - MICHAEL NOONAN

ELEVATIONS
1/4"=1'-0"

date	com	
date	com	
date	com	
date	com	
date	com	
date	com	

design rdo
drawn rdo
check rdo

COPYRIGHT 2001, ALL RIGHTS RESERVED, ARCONE & ASSOCIATES, LLC. ARCONE & ASSOCIATES, LLC. CONSTITUTES AN ORIGINAL WORK OF AUTHORSHIP. IT IS THE PROPERTY OF ARCONE ASSOCIATES, LLC. AND MAY NOT BE REPRODUCED, OR REPRODUCTION MADE OF USED, WITHOUT PERMISSION OF THE ARCHITECT.

sheet
A303
of 17
job A0110303