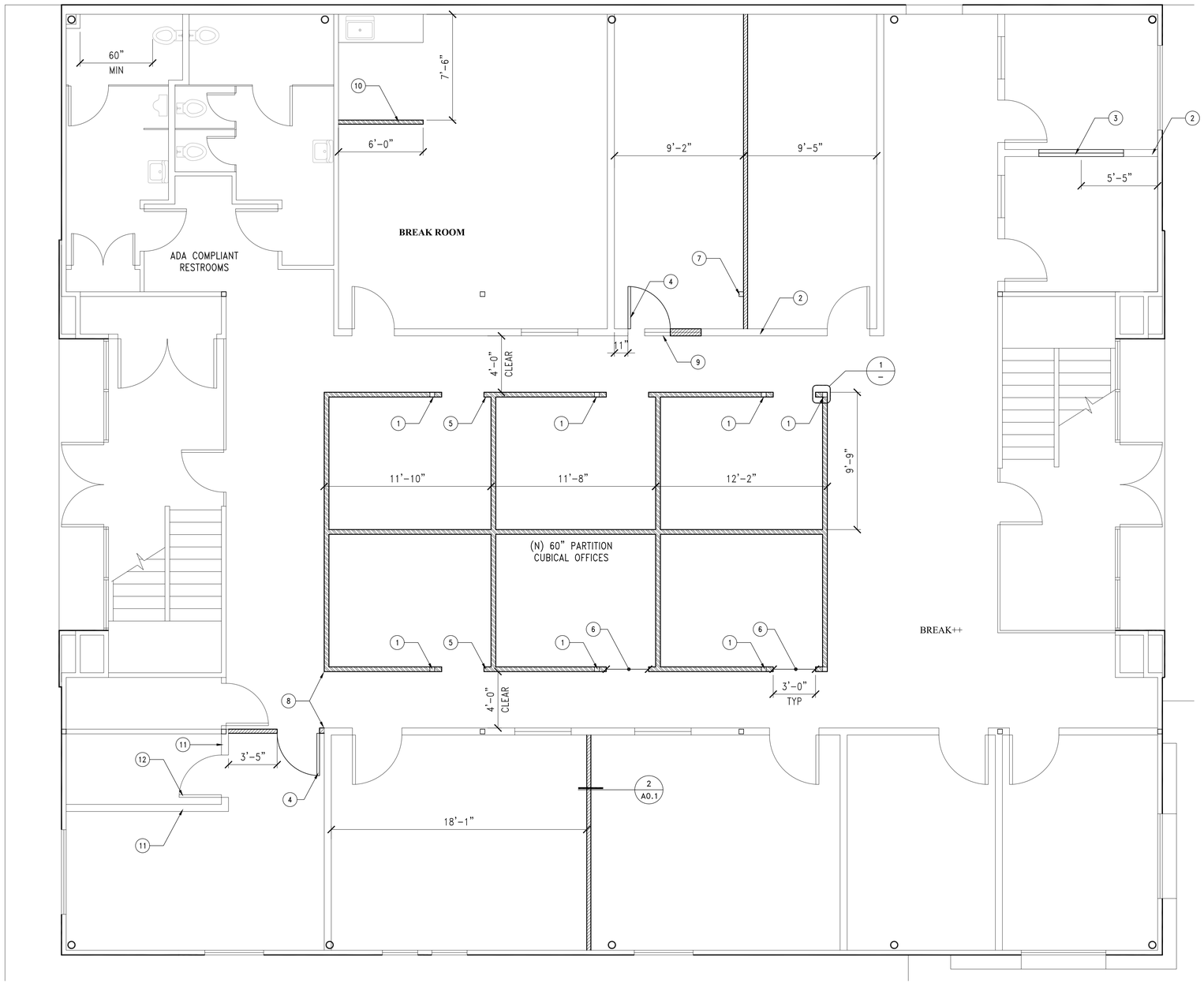

100% OFFICE USE

FLOOR PLAN

0 2' 4' 8' 12'

SCALE: 1/4"= 1'-0"

MATERIAL NOTES

1. (N) STEEL TUBE 3-1/2" X 3-1/2" X 1/4" WELD TO 1/2" PLATE
2. (E) WALL PATCH AND REPAIR AS REQ'D TYP ALL AREAS DUE TO NEW WORK
3. (N) INTERIOR WINDOW 6'-0" X 2'-0" @ 5'-0" AFF
4. (N) DOOR 3'-0" X 7'-0"
5. 1/2" PLYWOOD BACKING TO METAL FRAMING BUTT DRYWALL TO PLYWOOD TYP ALL OPENINGS
6. 37 1/2" FACE OF METAL FRAMING TO FACE OF STEEL POST TYP ALL OPENINGS
7. (E) STRUCTURAL COLUMNS/ POSTS FURR AROUND ALL EXPOSED COLUMNS/ POSTS w/ 5/8" GYP BD o/ 3/4" "HAT" CHANNEL
8. ALIGN WALLS
9. REMOVE EXISTING WINDOW
10. (N) PARTITION WALL 42" MAX HEIGHT
11. REMOVE EXISTING WALL
12. REMOVE EXISTING DOOR

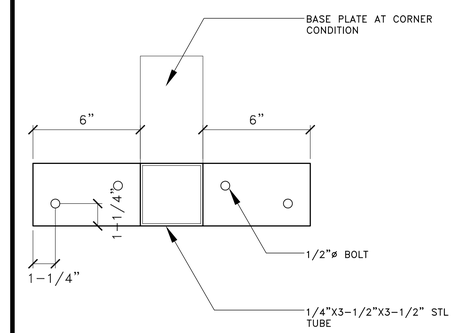

1-1/2"=1'-0" STEEL BASE PLATE 1

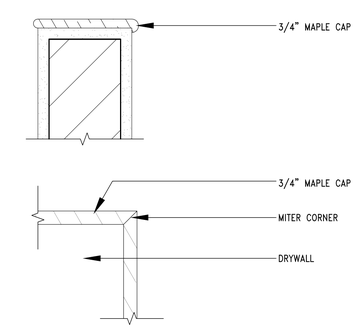

1-1/2"=1'-0" CAP @ TOP OF WALL + JAMB 2

WALL LEGEND

- (E) WALL
- (N) INTERIOR PARTITION WALL w/ 5/8" GYP BD BOTH SIDES OF MTL STUDS @ 16" OC w/ R-11 BATT INSULATION FULL HEIGHT AND LENGTH
- (N) 4"X4" MTL STUD PARTITION WALL 60" MAX HEIGHT w/ 3/4" MAPLE CAP AND JAMBS @ OPENINGS PER DETAIL 2/-

MAINSTREET
ARCHITECTS + PLANNERS INC.
422 East Main Street
Ventura California 93001
phn: (805) 652-2115 fax: (805) 652-1532
mainstreetarchitects.com

PLANS ARE PREPARED UNDER MY DIRECT SUPERVISION

REGISTERED ARCHITECT
DAVID MINH DOAN
C-52085
REN. 1-31-13
STATE OF CALIFORNIA

VIOLA OFFICE BUILDING
TENANT IMPROVEMENT
505 'A' STREET
OXNARD, CA
VIOLA CONSTRUCTORS

THESE DRAWINGS, INCLUDING ALL DESIGN, DETAILS, SPECIFICATIONS, AND INFORMATION ARE THE SOLE PROPERTY OF MAINSTREET ARCHITECTS & PLANNERS, INC. AND ARE FOR USE ON THIS SPECIFIC PROJECT AND SHALL NOT BE USED ON ANY OTHER WORK WITHOUT THE AGREEMENT AND PERMISSION OF MAINSTREET ARCHITECTS & PLANNERS, INC.

NO.	REVISIONS	DATE

O.	12-018
	1/4"=1'-0"
	08-01-12
	AUP
C	DD
CAD NO.	X-Model.dwg

A1

FLOOR PLAN