CITY OF COLTON
COUNTY OF SAN BERNARDINO, CALIFORNIA
XXXXXX

GENERAL NOTES

1. All work shall conform to the *"Standard Plans and Specifications for Public Works Construction" (Greenbook)*, latest edition, including supplements, to the City of Colton Standard Plans & Specifications, and to the City of Colton Public Services Department Engineering Division "Standard Construction Drawings"
2. No work shall be done without approval from the City Engineer; all offsite improvements shall be completed to the satisfaction of the City Engineer.
3. Contractor shall implement all City, County, State and Federal job site safety requirements as they relate to dust control, equipment movement, noise, hours of work and construction hazardous materials and shall minimize any inconvenience to the public.
4. The Contractor shall not conduct any operations or perform any work pertaining to the Project between the hours of 5:00 P.M. and 7:00 A.M. on any day nor on Saturday, Sunday or any holiday at any time without prior approval, in writing, of the City Engineer
5. The property owner shall be responsible for the cost of cleaning and hauling any hazardous and detrimental material discovered during and after the work from the site.
6. Contractor shall remove and replace all broken, cracked or raised sidewalks, drive approach, or curb and gutter within property frontage. For corner lots, both street frontages shall be included.
7. These notes shall take precedence over the information appearing on the Plans.
8. All work proposed in the public right of way requires a separate Permit [Street Cut Permit, Street Improvement Permit, Encroachment Permit, etc.] issued by the Public Services Department, Engineering Division.
9. A construction water meter is available from the Water/Wastewater Department, located at 160 S. 10th Street, Colton, CA 92324. The property owner/contractor/developer is responsible for the cost of the water used during the course of the construction.
10. These plans have been checked based on the assumption that all information shown or implied on these plans is true, and have been checked by the City only in conformance with City Standards, compliance with development conditions and for general conceptual approval of the drainage and parkway improvements shown hereon. No detailed mathematical check or field survey was made by the City for the accuracy of the existing utilities shown or not shown. No checks were made on the existing design infrastructures and structures shown on these plans; these plans were checked on the assumption that all building layouts, setbacks and site plans were initially approved by the appropriate entities.
11. The Registered Civil Engineer signing these plans is responsible for assuring the accuracy and acceptability of the work hereon. In the event any discrepancies arising during construction, he shall be responsible for determining an acceptable solution and revising the Plans for approval by the City.
12. The Contractor shall be responsible for clearing the proposed work area of all deleterious matter per the final approved grading plan. It shall be the responsibility of the Contractor to clear the right of way in accordance with the provisions of law as it affects each utility including irrigation lines and appurtances and at no cost to the City.
13. No work on off-site improvements may be started without an approved Street Improvement Plan, and a Street Improvement Permit issued by Public Services Department, Engineering Division.
14. All utility installations within the public right of way require a Street Cut Permit issued by Public Services Department, Engineering Division. In addition, an Installation Permit will be required for water or sewer lines, and is issued by the Water/Wastewater Department, located at 160 S. 10th Street, Colton, CA 92324.
15. For information regarding electrical installations within the public right of way contact the Electric Department at 150 S. 10th Street, Colton, CA, 92324. In addition, a Street Cut Permit issued by the Public Services Department, Engineering Division.
16. Gas, phone and cable utilities have franchise agreements with the City of Colton, and are required to secure their own Street Improvement Permit and/or Street Cut Permit from Public Services Department, Engineering.
17. A separate permit is required for any fence constructed on-site. This permit is issued by Community Development Department, 659 N. La Cadena Drive, Colton. If the proposed (or existing) fence is constructed within the public right of way, an Encroachment Permit is required and is issued by the Engineering Division, Public Services Department.
18. Prior to the commencement of any Work in public streets, or within the public right of way, Contractor shall provide a Traffic Control Plan (in triplicate) to the City Engineer for review.
    a. Traffic Control Plans for minor public right of way improvements shall conform to the "Work Area Traffic Control Handbook" (W.A.T.C.H. Manual); Traffic Control Plans for larger projects shall be prepared (in triplicate) by a Registered Civil Engineer, and each set shall be "wet-signed" and submitted to the City Engineer for review.
    b. The decision as to what constitutes a minor improvement versus a large project shall be at the sole discretion of the City Engineer.
19. Contractor shall verify the locations of all underground utility lines or structures whether shown or not shown on this plan, and shall be responsible for protecting them from damage. The Contractor shall call Underground Service Alert at 1-800-422-4133 a minimum of two working days before digging. The USA number shall be provided to the City Engineer.
20. No Work may begin without an approved Traffic Control Plan, and once begun, Contract shall endeavor to complete work in the street and/or public right of way without delay so as to provide minimum inconvenience to adjacent property owners and to the traveling public.
21. Any Contractor working within the public right of way is subject to the licensing and insurance requirements of the City.
22. The Contractor shall take all necessary and proper precautions to protect adjacent properties form any and all damage that may occur from storm water runoff and/or any deposit of water runoff and/or debris resulting from any and all work in connection with construction.
23. Trees, foliage, signs, and other improvements shall be protected in place and any damage to existing improvements shall be repaired or replaced in kind to the satisfaction of the City Engineer.
24. It shall be the responsibility of the Contractor to locate all substructures within the alignment of the proposed improvements, and in the event of substructure damage, the Contractor shall bear the total cost of repair or replacement.
25. If any utilities or facilities conflict with proposed improvements, all work shall stop and the City Engineer shall be notified immediately.
26. The Contractor is advised that all excavated materials shall become his property and shall be removed from the job site unless instructed by the City Engineer, in writing, to do otherwise.
27. No trenches, regardless of depth or width and whether on-site or off-site, may be left open overnight unless prior approval is secured, in writing, from the City Engineer.
28. Trenches deeper than 5'0" will require a CAL-OSHA permit. A copy of the permit shall be provided to the City Engineer.
29. The Contractor shall be responsible during all phases of the work to provide for public safety and convenience. The Contractor shall establish adequate access to driveways at the end of each working day to the satisfaction of the City Engineer
30. The Contractor shall provide a 72-hour notification to the affected properties, the Police Department, and the Fire Department in the event of a change in street closure to traffic and/or Public Safety Vehicles, parking restrictions, and on each Monday morning during the construction period.
31. Road closures in excess of twenty-four (24) hours shall require approval of the City of Colton City Council. Processing time for this request is six to eight (6 to 8) weeks, and a written application (Temporary Road Closure Permit) must be submitted to the City Engineer in sufficient time to process the request.
32. All Inspection requests for Work performed in the public right of way shall be directed to the Engineering Division, Public Services Department, and shall be made by the Contractor a minimum of twenty-four (24) hours before the services thereof will be required
33. Contractor shall comply with these requirements and City Engineer's directions during the course of construction.

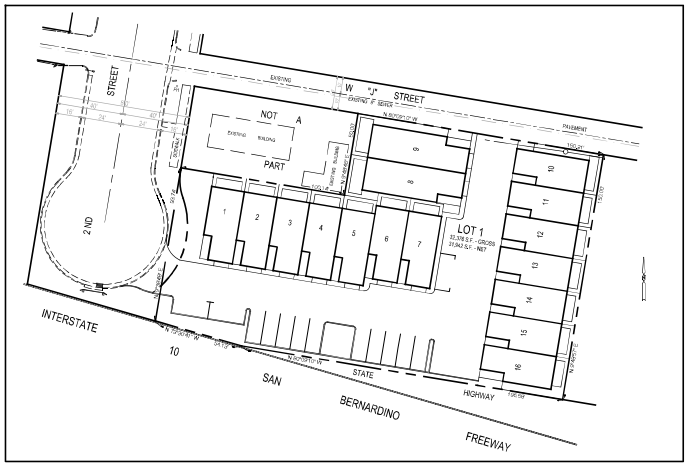
W "J" STREET
EXISTING 8" SEWER
NOT A PART
EXISTING BUILDING
EXISTING 6" WATER
EXISTING 6" WATER
PROPOSED 6" WATER
PROPOSED 6" WATER
PROPOSED

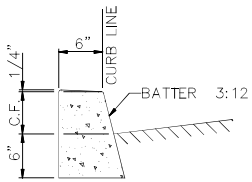

CONCRETE CURB DETAIL ⑥

NO SCALE

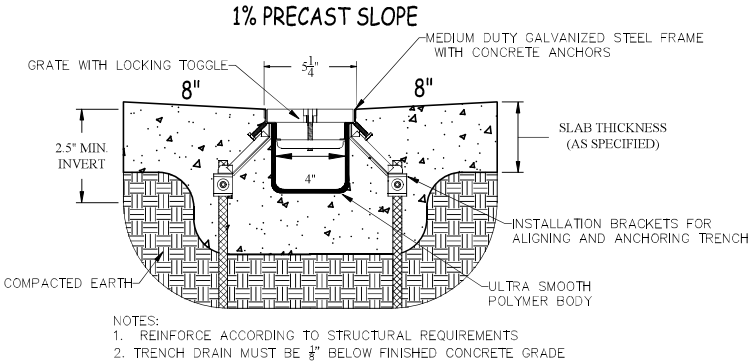

NOTES:
1. REINFORCE ACCORDING TO STRUCTURAL REQUIREMENTS
2. TRENCH DRAIN MUST BE 3/8" BELOW FINISHED CONCRETE GRADE

TYPICAL DTPF4–MDGS08ZSA SQUARE TRENCH SECTION ⑧

GRADING PLAN NOTES AND QUANTITIES

①	CONSTRUCT SIX FOOT HIGH CONCRETE BLOCK WALL	25	EA
②	CONSTRUCT SEVEN FOOT HIGH SOUND WALL	145	LF
③	CONSTRUCT DRIVEWAY PAVEMENT PER SOILS ENGINEER'S RECOMMENDATIONS	6,300	SF
④	CONSTRUCT FIRE DEPARTMENT TURN AROUND – PAVEMENT TO MEET FIRE DEPARTMENT SPECIFICATIONS (SHADED AREA ONLY)	4,150	SF
⑤	CONSTRUCT SIDEWALK/DRIVEWAY CONCRETE PAVEMENT PER SOILS ENGINEER'S RECOMMENDATIONS	815	SF
⑥	CONSTRUCT CONCRETE CURB PER DETAIL ON SHEET No. 3	320	LF
⑦	CONSTRUCT CONCRETE SLAB AS SHOWN	25	EA
⑧	INSTALL DURA DRAIN DTPF4–MDGS08ZSA 4" SQUARE TRENCH DRAIN SEE SHEET No. 3 FOR DETAIL	26	LF
⑨	CONSTRUCT 6' HIGH METAL FENCE AS SHOWN	387	LF

STORM DRAIN SYSTEM NOTES AND QUANTITIES

⑩	INSTALL 12"x12" PLASTIC BASIN W/ FOSSIL FILTER	25	EA
⑪	INSTALL 4" PVC SDR 35 PIPE AS SHOWN	524	LF
⑫	INSTALL 6" PVC SDR 35 PIPE AS SHOWN	74	LF
⑬	INSTALL 24"x24" TRAFFIC WEIGHT CATCH BASIN AND INSTALL AN OLDCASTLE FGP–24F FLOGARD FILTER INSERT	2	EA
⑭	INSTALL MAXWELL IV DRYWELL – TOTAL DEPTH = 22'	1	EA
⑮	INSTALL MAXWELL IV DRYWELL – TOTAL DEPTH = 30'	1	EA
⑯	INSTALL OLDCASTLE STORMCAPTURE (7'x15'x3' I.D.) MODULES	5	EA

Underground Service Alert
Call: TOLL FREE
1–800
422–4133
TWO WORKING DAYS BEFORE YOU DIG

BENCHMARK

B.M. No. 220 - ELEV. = 1010.64 FD. 2¼" CADT BRASS DISK IN TOP OF CURB, 20' S. OF SE COR BCR INTERSECTION OF VALLEY BLVD & RANCHO AVE. STAMPED "SB10 GPS 22.0 2000"

PROFESSIONAL ENGINEER
V.O. ORTIZ
No. 34087
Exp. 12-31-27
CIVIL
STATE OF CALIFORNIA

PREPARED BY:
GILBERT ENGINEERING COMPANY, INC.
P.O. BOX 940
GLENDORA, CALIFORNIA 91740
(626) 253–2443
email – gilbertcivil@gmail.com

CITY OF COLTON
PUBLIC WORKS DEPARTMENT
CITY ENGINEER
NAME: VICTOR ORTIZ, P.E. EXPIRES: 6/30/27
R.C.E: 73848
ACCEPTED: _____ DATE: _____
PLAN NO. #####

REVISIONS | DATE | APP'D

PRECISE GRADING PLAN
CONSTRUCTION NOTES AND DETAILS
TRACT No. 20767
100 N. 2nd STREET

SCALE
HORZ: NONE
VERT: NONE
DATE: 02-10-26
SHEET 2 OF 10

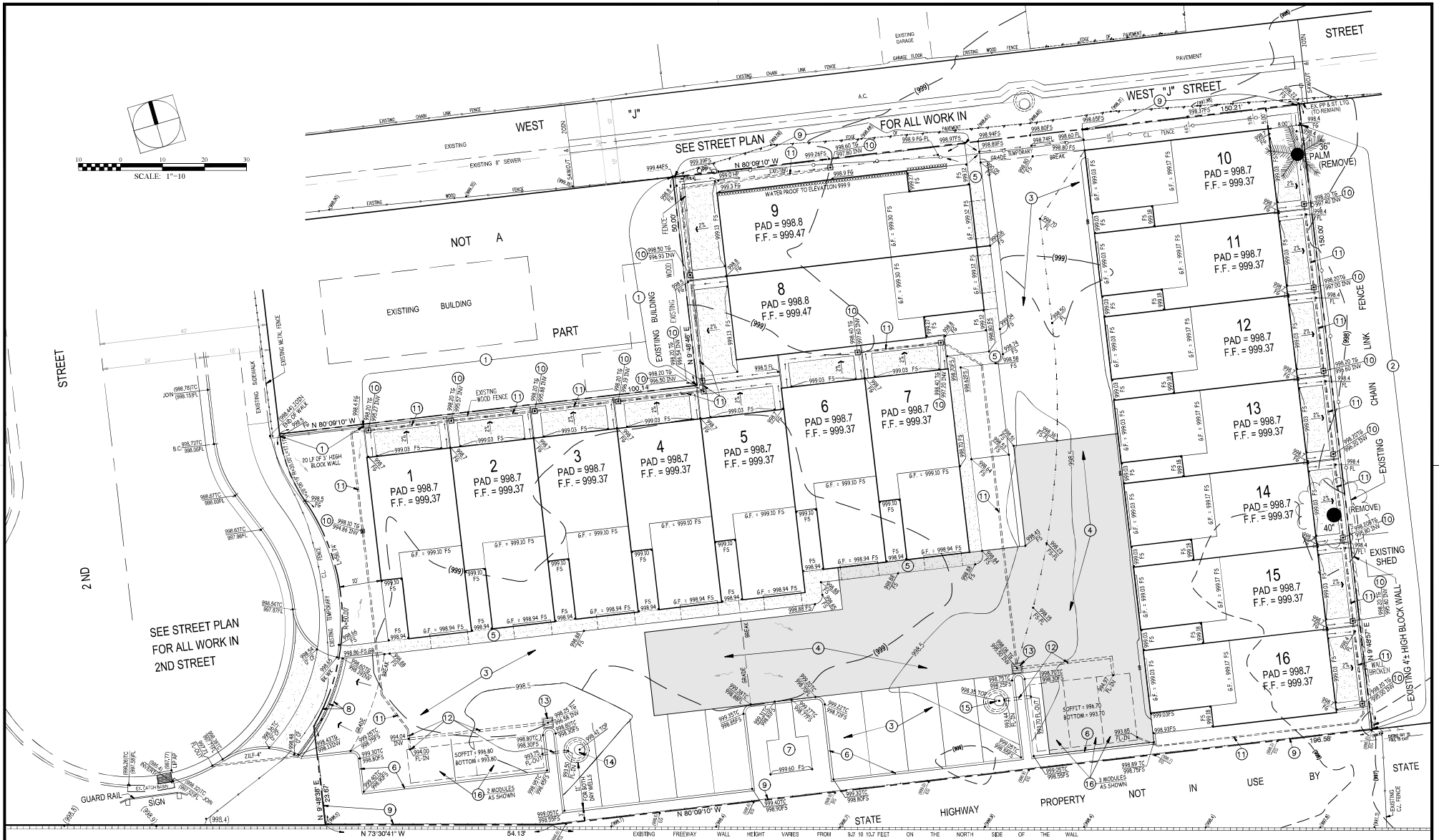

Underground Service Alert

Call: TOLL FREE 1-800 422-4133

TWO WORKING DAYS BEFORE YOU DIG

BENCHMARK

B.M. No. 220 - ELEV. = 1010.64
FD. 2½" CADT BRASS DISK IN TOP OF CURB, 20' S. OF SE COR BCR INTERSECTION OF VALLEY BLVD & RANCHO AVE. STAMPED "SB10 GPS 22.0 2000"

PROFESSIONAL ENGINEER — LO ECKERT — No. 34087 — Exp. 12-31-27 — CIVIL — STATE OF CALIFORNIA

PREPARED BY:

GILBERT ENGINEERING COMPANY, INC.
P.O. BOX 940
GLENDORA, CALIFORNIA 91740
(626) 253-2443
email - gilbertcivil@gmail.com

CITY OF COLTON
PUBLIC WORKS DEPARTMENT

CITY ENGINEER
NAME: VICTOR ORTIZ, P.E. EXPIRES: 6/30/27
R.C.E.: 73848

ACCEPTED: _____ DATE: _____

PLAN NO. #####

REVISIONS | DATE | APP'D

PRECISE GRADING PLAN
TRACT No. 20767
100 N. 2nd STREET

SCALE: NONE
HORZ: NONE
VERT: NONE
DATE: 02-10-26

SHEET 3 OF 10

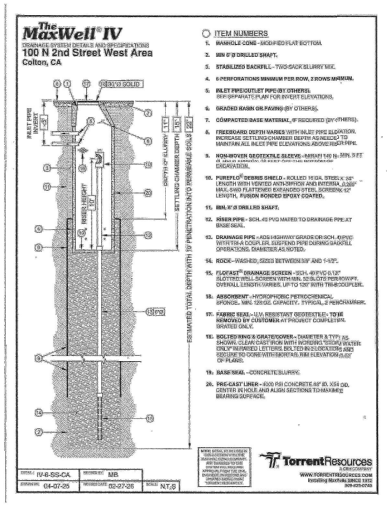

DRAFT

MaxwellIV Drainage System Calculations Prepared on February 27, 2026
Project: 100 N 2nd Street - West Area - Colton, CA
Contact: Ed Eckert at Gilbert Engineering - Glendora CA

Given: (depths from existing ground)

Design Infiltration Rate	3.39 in/hr
Mitigated Volume	964 cf
Required Drawdown Time	48 hours
Min. Req. Depth to Start Infiltration	5 ft
Groundwater Depth	60 ft

Proposed: (depths from drywell lid)

Drywell Rock Shaft Diameter	6 ft
Drywell Chamber Depth	25 ft
Rock Porosity	40 %
Depth to Slurry	11 ft
Drywell Bottom Depth	36 ft

Convert Design Rate from in/hr to ft/sec.

$1.19 \cdot \frac{in}{hr} \cdot \frac{ft}{12 \cdot in} \cdot \frac{hr}{3600 \cdot sec} = 0.000028 \cdot \frac{ft}{sec}$

A 6 foot diameter drywell provides 19.35 SF of infiltration area per foot of depth, plus 28.27 SF at the bottom.

For a 22 foot deep drywell, infiltration occurs between 11 feet and 22 feet below grade. This provides 11 feet of infiltration depth in addition to the bottom area. Infiltration area per drywell is calculated below.

$(11\ ft \times 19.35\ ft^2) + 28.27\ ft^2 = 236\ ft^2$

Combine design rate with infiltration area to get infiltration flowrate for each drywell.

$0.000028 \cdot \frac{ft}{sec} \times 236\ ft^2 = 0.00649 \cdot \frac{ft^3}{sec}$

Infiltration volume for each drywell based on various time frames are included below.

48 hrs: 0.0066 CFS x 48 hours x $\frac{3600\ sec}{1\ hr}$ = 1,122 cubic feet of water infiltrated.
3 hrs: 0.0066 CFS x 3 hours x $\frac{3600\ sec}{1\ hr}$ = 70 cubic feet of water infiltrated.

Chamber diameter = 4 feet. Drywell rock shaft diameter = 6 feet.
Volume provided in each drywell with chamber depth of 16 feet.
$(15\ ft \times 12.57\ ft^2) + (7\ ft \times 28.27\ ft^2 \times 40\ \%) = 288\ ft^3$

The proposed MaxWell System is composed of 7 drywell(s).
Total volume provided = 268 ft^3
Total 3 hour infiltration volume = 70 ft^3
Total 48 hour infiltration volume = 1,122 ft^3
Total infiltration flowrate = 0.00649 $\frac{ft^3}{sec}$

Based on the total mitigated volume of 964 CF, after subtracting the volume stored in the MaxWell System 268 CF and the volume infiltrated within 3 hours 70 CF, the residual volume of 626 CF could be stored in a StormCapture or similar detention system and connected to the drywell system.

For any questions, please contact Matthew Burke at 442-243-6982 or via email at Matthew.Burke@Oldcastle.com

NOTE: *Sizing calculations are only applicable to the MaxWell drywell system, and does not apply to any other proposed systems.*

Torrent Resources (DA) Incorporated
13500 Slover Avenue
Fontana, CA 92337
Phone 909-429-0768
Drywell Experts SINCE 1972

DRYWELL ON WEST

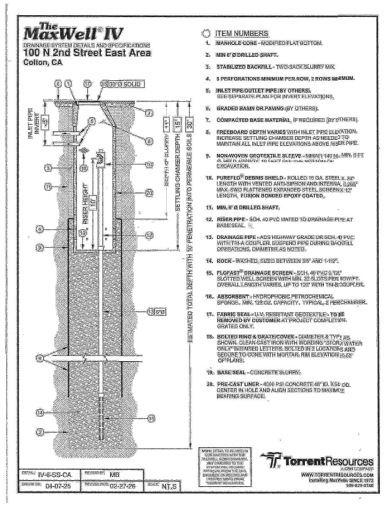

DRAFT

MaxwellIV Drainage System Calculations Prepared on February 27, 2026
Project: 100 N 2nd Street - East Area - Colton, CA
Contact: Ed Eckert at Gilbert Engineering - Glendora CA

Given: (depths from existing ground)

Design Infiltration Rate	3.39 in/hr
Mitigated Volume	1413 cf
Required Drawdown Time	48 hours
Min. Req. Depth to Start Infiltration	5 ft
Groundwater Depth	60 ft

Proposed: (depths from drywell lid)

Drywell Rock Shaft Diameter	6 ft
Drywell Chamber Depth	25 ft
Rock Porosity	40 %
Depth to Slurry	11 ft
Drywell Bottom Depth	36 ft

Convert Design Rate from in/hr to ft/sec.

$1.19 \cdot \frac{in}{hr} \cdot \frac{ft}{12 \cdot in} \cdot \frac{hr}{3600 \cdot sec} = 0.000028 \cdot \frac{ft}{sec}$

A 6 foot diameter drywell provides 19.35 SF of infiltration area per foot of depth, plus 28.27 SF at the bottom.

For a 30 foot deep drywell, infiltration occurs between 11 feet and 30 feet below grade. This provides 19 feet of infiltration depth in addition to the bottom area. Infiltration area per drywell is calculated below.

$(19\ ft \times 19.35\ ft^2) + 28.27\ ft^2 = 396\ ft^2$

Combine design rate with infiltration area to get infiltration flowrate for each drywell.

$0.000028 \cdot \frac{ft}{sec} \times 396\ ft^2 = 0.01094 \cdot \frac{ft^3}{sec}$

Infiltration volume for each drywell based on various time frames are included below.

48 hrs: 0.0109 CFS x 48 hours x $\frac{3600\ sec}{1\ hr}$ = 1,888 cubic feet of water infiltrated.
3 hrs: 0.0109 CFS x 3 hours x $\frac{3600\ sec}{1\ hr}$ = 118 cubic feet of water infiltrated.

Chamber diameter = 4 feet. Drywell rock shaft diameter = 6 feet.
Volume provided in each drywell with chamber depth of 19 feet.
$(19\ ft \times 12.57\ ft^2) + (11\ ft \times 28.27\ ft^2 \times 40\ \%) = 358\ ft^3$

The proposed MaxWell System is composed of 4 drywell(s).
Total volume provided = 358 ft^3
Total 3 hour infiltration volume = 118 ft^3
Total 48 hour infiltration volume = 1,889 ft^3
Total infiltration flowrate = 0.01094 $\frac{ft^3}{sec}$

Based on the total mitigated volume of 1413 CF, after subtracting the volume stored in the MaxWell System 358 CF and the volume infiltrated within 3 hours 118 CF, the residual volume of 948 CF could be stored in a StormCapture or similar detention system and connected to the drywell system.

For any questions, please contact Matthew Burke at 442-243-6982 or via email at Matthew.Burke@Oldcastle.com

NOTE: *Sizing calculations are only applicable to the MaxWell drywell system, and does not apply to any other proposed systems.*

Torrent Resources (DA) Incorporated
13500 Slover Avenue
Fontana, CA 92337
Phone 909-429-0768
Drywell Experts SINCE 1972

DRYWELL ON EAST

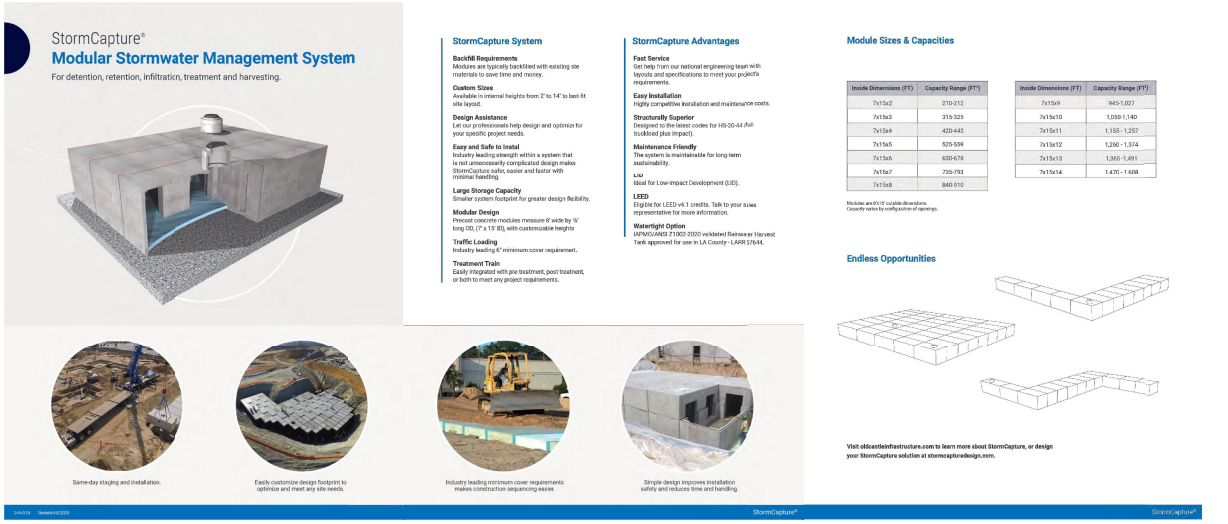

STORMCAPTURE SYSTEM FOR BOTH DRYWELLS

Underground Service Alert
Call: TOLL FREE
1-800
422-4133
TWO WORKING DAYS BEFORE YOU DIG

BENCHMARK

B.M. No. 220 - ELEV. = 1010.64
FD. 2½" CADT BRASS DISK IN TOP OF CURB, 20' S. OF SE COR BCR INTERSECTION OF VALLEY BLVD & RANCHO AVE. STAMPED "SB10 GPS 22.0 2000"

PROFESSIONAL ENGINEER
ED ECKERT
No. 34587
Exp. 12-31-27
CIVIL
STATE OF CALIFORNIA

PREPARED BY:
GILBERT ENGINEERING COMPANY, INC.
P.O. BOX 940
GLENDORA, CALIFORNIA 91740
(626) 253-2443
email - gilbertcivil@gmail.com

CITY OF COLTON
PUBLIC WORKS DEPARTMENT
CITY ENGINEER
NAME: VICTOR ORTIZ, P.E. EXPIRES: 6/30/27
R.C.E: 73848
ACCEPTED: _____ DATE: _____
PLAN NO. #####

REVISIONS	DATE	APP'D

STORM DRAIN SYSTEM DETAILS
TRACT No. 20767
100 N. 2nd STREET

SCALE
HORZ: NONE
VERT: NONE
DATE: 02-10-26
SHEET 4 OF 10

FGP-0001

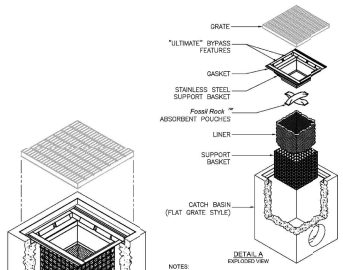

FLOGARD+PLUS® FILTER
-INSTALLED INTO CATCH BASIN-

U.S. PATENT # 6,00,023 & 6,877,029

NOTES:

1. FloGard®+Plus (frame mount) high capacity catch basin inserts are available in most sizes and styles (see specifier chart, sheet 2 of 2). Refer to the FloGard®+Plus (wall mount) insert for devices to fit non-standard, or combination style catch basins.
2. Filter insert shall have both an "initial" filtering bypass and "Ultimate" high flow bypass features.
3. Filter support frame shall be constructed from stainless steel Type 304.
4. Allow a minimum of 2.0 feet, of clearance between the bottom of the grate and top of outlet (pipes), or filter to the FloGard® insert for "shallow" installations.
5. Filter medium shall be *Fossil Rock* ™ installed and maintained in accordance with manufacturer specifications.
6. Storage capacity reflects 60% of maximum solids collection prior to impeding filtering bypass.
7. Filtered flow rate includes a safety factor of two.

TITLE: FloGard®+PLUS
CATCH BASIN FILTER INSERT
(Flat Grated Inlet Style)

KriStar Enterprises, Inc.
360 Sutton Place, Santa Rosa, CA 95407
Ph: 800.579.8819. Fax: 707.524.8196. www.kristar.com

FGP-0001 | D | DRN: JH 10/26/06 | CHK: 11/2/06 | APV: 11/2/06

FGP-0001

U.S. PATENT # 6,00,023 & 6,877,029

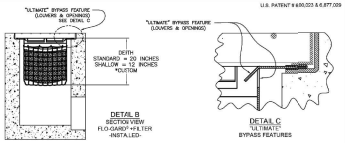

* MANY OTHER STANDARD & CUSTOM SIZES & DEPTHS AVAILABLE UPON REQUEST.

SPECIFIER CHART

MODEL NO. STANDARD DEPTH	STANDARD & SHALLOW DEPTHS (Units in inches, rounded to nearest 1/16 inch) INLET (I) Pipe Dimension (inch x inch)	GRATE OD Dimension (inch x inch)	TOTAL BYPASS CAPACITY (ea. ft./sec.)	STANDARD DEPTH (20 inches) SOLIDS STORAGE CAPACITY (cu. ft.)	FILTERED FLOW (cu. ft./sec.)	MODEL NO. SHALLOW DEPTH	SHALLOW DEPTH (12 inches) SOLIDS STORAGE CAPACITY (cu. ft.)	FILTERED FLOW (cu. ft./sec.)
FGP-12F	12 X 12	17 X 14	2.8	0.3	0.4	FGP-12FB	.15	.25
FGP-1636F	16 X 30	19 X 35	6.8	2.3	1.6	FGP-1636FB	1.1	.8
FGP-16F	16 X 16	18 X 19	4.7	0.8	0.7	FGP-16FB	.45	.4
FGP-1624F	16 X 24	18 X 28	5.2	1.6	1.2	FGP-1624FB	.85	.7
FGP-18F	18 X 18	18 X 20	4.7	0.8	0.7	FGP-18FB	.45	.4
FGP-1820F	18 X 20	18 X 21	5.5	2.1	1.4	FGP-1820FB	1.2	.8
FGP-1824F	18 X 22	18 X 24	5.2	1.5	1.2	FGP-1824FB	.85	.7
FGP-1836F	18 X 36	18 X 40	8.8	2.3	1.8	FGP-1836FB	1.3	.9
FGP-2024F	18 X 22	20 X 24	5.8	1.2	1.0	FGP-2024FB	.7	.59
FGP-21F	22 X 22	22 X 24	6.1	2.2	1.5	FGP-21FB	1.25	.85
FGP-2142F	21 X 40	24 X 40	9.1	4.3	2.4	FGP-2142FB	2.45	1.35
FGP-2148F	18 X 45	22 X 48	9.8	4.7	2.6	FGP-2148FB	2.7	1.5
FGP-24F	24 X 24	24 X 27	6.1	2.2	1.5	FGP-24FB	1.25	.85
FGP-2430F	24 X 30	28 X 35	7.2	2.8	1.9	FGP-2430FB	1.6	1.05
FGP-2436F	24 X 36	24 X 40	8.1	3.4	2.0	FGP-2436FB	1.95	1.15
FGP-2448F	24 X 48	28 X 48	9.3	4.4	2.4	FGP-2448FB	2.5	1.35
FGP-28F	28 X 28	32 X 32	6.3	2.2	1.5	FGP-28FB	1.25	.85
FGP-3448F	34 X 36	38 X 40	8.3	4.3	2.3	FGP-3448FB	2.4	1.3
FGP-36F	30 X 30	32 X 34	8.1	3.6	2.0	FGP-36FB	2.05	1.15
FGP-3648F	36 X 36	38 X 40	8.1	4.6	2.4	FGP-36FB	2.65	1.35
FGP-3648F	36 X 48	40 X 48	11.1	6.8	3.2	FGP-3648FB	3.9	1.85
FGP-48F	48 X 48	48 X 54	13.1	8.5	3.9	FGP-48FB	5.45	2.25
FGP-5024F	24 X 24	28 X 28	6.1	2.2	1.5	FGP-5024FB	1.25	.85
FGP-1636FSO	16 X 36	20 X 40	8.8	2.3	1.6	FGP-1636FSO	1.3	.9
FGP-2436FSO	20 X 36	24 X 40	8.1	3.4	2.0	FGP-2436FSO	1.95	1.15
FGP-48FSO	16 X 48	20 X 54	9.3	2.2	1.5	FGP-48FSO	1.25	.85

TITLE: FloGard®+PLUS
CATCH BASIN FILTER INSERT
(Flat Grated Inlet Style)

KriStar Enterprises, Inc.
360 Sutton Place, Santa Rosa, CA 95407
Ph: 800.579.8819. Fax: 707.524.8196. www.kristar.com

FGP-0001 | D | DRN: JH 10/26/06 | CHK: 11/2/06 | APV: 11/2/06

CATCH BASIN FILTER INSERT

Underground Service Alert
Call: TOLL FREE
1-800
422-4133
TWO WORKING DAYS BEFORE YOU DIG

BENCHMARK

B.M. No. 220 - ELEV. = 1010.64
FD. 2½" CADT BRASS DISK IN TOP OF CURB, 20' S. OF SE COR BCR INTERSECTION OF VALLEY BLVD & RANCHO AVE. STAMPED "SB10 GPS 22.0 2000"

PROFESSIONAL ENGINEER
LO ECKERT
No. 34087
Exp. 12-31-07
CIVIL
STATE OF CALIFORNIA

PREPARED BY:
GILBERT ENGINEERING COMPANY, INC.
P.O. BOX 940
GLENDORA, CALIFORNIA 91740
(626) 253-2443
email – gilbertcivil@gmail.com

CITY OF COLTON
PUBLIC WORKS DEPARTMENT
CITY ENGINEER
NAME: VICTOR ORTIZ, P.E. EXPIRES: 6/30/27
R.C.E: 73848
ACCEPTED: _____ DATE: _____
PLAN NO. #####

REVISIONS	DATE	APP'D

STORM DRAIN SYSTEM DETAILS
TRACT No. 20767
100 N. 2nd STREET

SCALE: NONE
HORZ: NONE
VERT: NONE
DATE: 02-10-08
SHEET 5 OF 10

N.P.D.E.S. REQUIREMENTS:

All construction on off-site or on-site improvements shall adhere to National Pollution Discharge Elimination System (NPDES) Best Management Practices (BMP's) to prevent deleterious material or pollutants from entering the City or County Storm Drain Systems.

The following should be adhered to:

1. Handle, store and dispose of materials properly.
2. Avoid excavation and grading activities during wet weather.
3. Construct diversion dikes and drainage swales around working sites.
4. Cover stockpiles and excavated soil with secured tarps or plastic sheeting.
5. Develop and implement erosion control plans and provide a copy to the Engineering Division, Public Services Department for approval by the City Engineer.
6. Check and repair leaking equipment AWAY from construction site.
7. Designate a location AWAY from storm drains for refueling vehicles.
8. When working near catch basins, cover and seal each basin prior to the start of construction.
9. Use vacuum with all concrete saving operations.
10. Never wash excess material from aggregate, concrete or equipment onto a street.
11. Catch drips from paver with drip pans or absorbent material.
12. Clean up all spills using dry methods.
13. Gutters shall be kept clean after leaving construction site. Sweep all gutters at the end of each working day.
14. During construction, dumpster(s) shall be on site at all times.
15. Call 911 in case of a hazardous spill.
16. Keep a running log of all activities in connection with the "Storm Water Pollution Prevention Plan" (SWPPP).
17. Name a person on-site to be responsible for complying with SWPPP.
18. The following BMP's as outlined in, but not limited to, the "Best Management Practices Haandbook, California Stormwater Quality Task Task Force, Sacramento, California, 1993", or the latest revised edition, latest revised edition, may apply during the construction of this Project. (Additonal measures may be required if deemed appropriate by County Inspectors.)

19. BEST MANAGEMENT PRACTICES:

CA001	DEWATERING OPERATIONS
CA002	PAVING OPERATIONS
CA003	STRUCTURE CONSTRUCTION & PAINTING
CA010	MATERIAL DELIVERY AND STORAGE
CA011	MATERIAL USE
CA012	SPILL PREVENTION AND CONTROL
CA020	SOLID WASTE MANAGEMENT
CA021	HAZARDOUS WASTE MANAGEMENT
CA022	CONTAMINATED SOIL MANAGEMENT
CA023	CONCRETE WASTE MANAGEMENT
CA030	VEHICLE & EQUIPMENT CLEANING
CA031	VEHICLE & EQUIPMENT FUELING
CA032	VEHICLE & EQUIPMENT MAINTENANCE
CA040	EMPLOYEE/SUBCONTRACTOR TRAINING
ESC01	SCHEDULING
ESC02	PRESERVATION OF EXIST VEGETATION
ESC10	SEEDING AND PLANTING
ESC11	MULCHING
ESC20	GEOTEXTILES AND MATS
ESC21	DUST CONTROLS
ESC23	CONSTRUCTION ROAD STABILIZATION
ESC24	STABILIZED CONSTRUCTION ENTRANCE
ESC30	EARTH DIKE
ESC31	TEMPORARY DRAINS AND SWALES
ESC32	SLOPE DRAIN
ESC40	OUTLET PROTECTION
ESC41	CHECK DAMS
ESC42	SLOPE ROUGHENING/TERRACING
ESC50	SILT FENCE
ESC51	STRAW BALE BARRIERS
ESC52	SAND BAG BARRIER
ESC53	BRUSH OR ROCK FILTER
ESC54	STORM DRAIN INLET PROTECTION
ESC55	SEDIMENT TRAP
ESC56	SEDIMENT BASIN

SEE CUT SHEETS ON PAGE 5

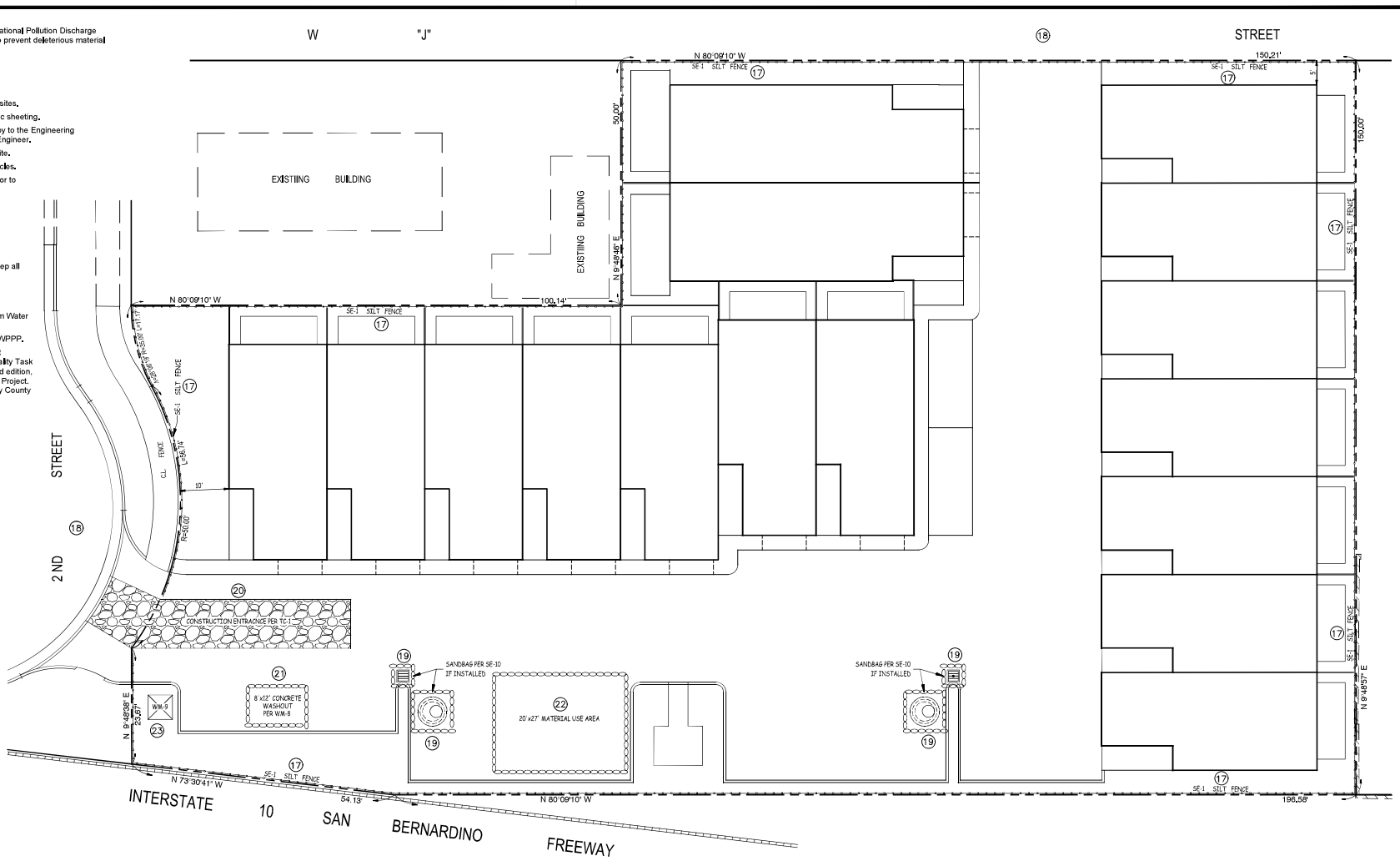

EROSION CONTROL NOTES AND QUANTITIES

17	INSTALL SE-1, SILT FENCE	783	LF
18	SE-7, STREET SWEEPING & VACUUMING		LS
19	SE-10, STORM DRAIN INLET	4	EA
20	INSTALL TC-1, CONSTRUCTION ENTRANCE	550	SF
21	WM-2, MATERIAL USE	540	SF
22	WM-8, CONCRETE WASHOUT	96	SF
23	WM-9, SANITARY/SEPTIC WASTE MANAGEMENT	1	EA

SCALE: 1"=10'

Underground Service Alert
Call: TOLL FREE 1-800 422-4133
TWO WORKING DAYS BEFORE YOU DIG

BENCHMARK

B.M. No. 220 - ELEV. = 1010.64 FD. 2½" CADT BRASS DISK IN TOP OF CURB, 20' S. OF SE COR BCR INTERSECTION OF VALLEY BLVD & RANCHO AVE. STAMPED "SB10 GPS 22.0 2000"

PROFESSIONAL ENGINEER — ED ECKERT — No. 34087 — Exp. 12-31-27 — CIVIL — STATE OF CALIFORNIA

PREPARED BY:
GILBERT ENGINEERING COMPANY, INC.
P.O. BOX 940
GLENDORA, CALIFORNIA 91740
(626) 253-2443
email – gilbertcivil@gmail.com

CITY OF COLTON
PUBLIC WORKS DEPARTMENT
CITY ENGINEER
NAME: VICTOR ORTIZ, P.E. EXPIRES: 6/30/27
R.C.E: 73848
ACCEPTED: _____ DATE: _____
PLAN NO. #####

REVISIONS | DATE | APP'D.

EROSION CONTROL PLAN
TRACT No. 20767
100 N. 2nd STREET

SCALE
HORZ: NONE
VERT: NONE
DATE: 03-03-26
SHEET 6 OF 10

Silt Fence SE-1

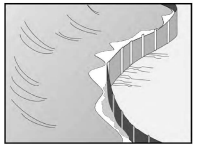

Categories

- EC Erosion Control
- SE Sediment Control ☑
- TC Tracking Control
- WE Wind Erosion Control
- NS Non-Stormwater Management Control
- WM Waste Management and Materials Pollution Control

Legend:
☑ **Primary Category**
☒ **Secondary Category**

Targeted Constituents

- Sediment (coarse sediment) ☑
- Nutrients
- Trash
- Metals
- Bacteria
- Oil and Grease
- Organics

Potential Alternatives

- SE-6 Fiber Rolls
- SE-6 Gravel Bag Berm SE-12 Manufactured Linear Sediment Controls
- SE-14 Compost Socks and Berms
- SE-14 Biofilter Bags

Description and Purpose

A silt fence is made of a woven geotextile that has been entrenched, attached to supporting poles, and sometimes backed by a plastic or wire mesh for support. The silt fence detains water, promoting sedimentation of coarse sediment behind the fence. Silt fence does not retain soil fine particles like clays or silts.

Suitable Applications

Silt fences are suitable for perimeter control, placed below areas where sheet flows discharge from the site. They could also be used as interior controls below disturbed areas where runoff may occur in the form of sheet and rill erosion and around inlets within disturbed areas (Storm Drain Inlet Protection, SE-10). Silt fences should not be used in locations where the flow is concentrated. Silt fences should always be used in combination with erosion controls. Suitable applications include:

- At perimeter of a project (although they should not be installed up and down slopes).
- Below the toe or down slope of exposed and erodible slopes.
- Along streams and channels.
- Around temporary spoil areas and stockpiles.
- Around inlets.
- Below other small cleared areas.

Copyright 2024 by the California Stormwater Quality Association

Silt Fence SE-1

Limitations

- Do not use in streams, channels, drain inlets, or anywhere flow is concentrated.
- Do not use in locations where ponded water may cause a flooding hazard.
- Do not use silt fence to divert water flows or place across any contour line.
- Improperly installed fences are subject to failure from undercutting, overtopping, or collapsing.
- Must be trenched and keyed in.
- According to the State Water Board's *CGP Review, Issue #2* (2014), silt fences reinforced with metal or plastic mesh should be avoided due to plastic pollution and wildlife concerns.
- Not intended for use as a substitute for Fiber Rolls (SE-5), when fiber rolls are being used as a slope interruption device.
- Do not use on slopes subject to creeping, slumping, or landslides.

Implementation

General

A silt fence is a temporary sediment barrier consisting of woven geotextile stretched across and attached to supporting posts, trenched in, and, depending upon the strength of fabric used, supported with plastic or wire mesh fence. Silt fences trap coarse sediment by intercepting and detaining sediment-laden runoff from disturbed areas in order to promote sedimentation behind the fence.

The following layout and installation guidance can improve performance and should be followed:

- Silt fence should be used in combination with erosion controls up-slope in order to provide the most effective sediment control.
- Silt fence alone is not effective at reducing turbidity. (Barrett and Malina, 2004)
- Designers should consider diverting sediment laden water to a temporary sediment basin or trap. (EPA, 2012)
- Use principally in areas where sheet flow occurs.
- Install along a level contour, so water does not pond more than 1.5 ft. at any point along the silt fence.
- Provide sufficient room for runoff to pond behind the fence and to allow sediment removal equipment to pass between the silt fence and toes of slopes or other obstructions. About 1200 ft.² of ponding area should be provided for every acre draining to the fence.
- Efficiency of silt fences is primarily dependent on the detention time of the runoff behind the control. (Barrett and Malina, 2004)

Silt Fence SE-1

- The drainage area above any fence should not exceed a quarter of an acre. (Rule of Thumb- 100-feet of silt fence per 10,000 ft.² of disturbed area.) (EPA, 2012)
- The maximum length of slope draining to any point along the silt fence should be 100 ft. per ft of silt fence.
- Turn the ends of the filter fence uphill to prevent stormwater from flowing around the fence.
- Leave an undisturbed or stabilized area immediately down slope from the fence where feasible.
- Silt fences should remain in place until the disturbed area draining to the silt fence is permanently stabilized, after which, the silt fence fabric and posts should be removed and properly disposed.
- J-hooks, which have ends turning up the slope to break up long runs of fence and provide multiple storage areas that work like mini-retention areas, may be used to increase the effectiveness of silt fence.
- Be aware of local regulations regarding the type and installation requirements of silt fence, which may differ from those presented in this fact sheet.

Design and Layout

In areas where high winds are anticipated the fence should be supported by a plastic or wire mesh. The geotextile fabric of the silt fence should contain ultraviolet inhibitors and stabilizers to provide longevity equivalent to the project life or replacement schedule.

- Layout in accordance with the attached figures.
- For slopes that contain a high number of rocks or large dirt clods that tend to dislodge, it may be necessary to protect silt fence from rocks (e.g., rockfall netting) ensure the integrity of the silt fence installation.

Standard vs. Heavy Duty Silt Fence

Standard Silt Fence

- Generally applicable in cases where the area draining to fence produces moderate sediment loads.

Heavy Duty Silt Fence

- Heavy duty silt fence usually has 1 or more of the following characteristics, not possessed by standard silt fence.
  - Fabric is reinforced wit wire backing or additional support.
  - Posts are spaced closer than pre-manufactured, standard silt fence products.
- Use is generally limited to areas affected by high winds.
- Area draining to fence produces moderate sediment loads.

Materials

Standard Silt Fence

- Silt fence material should be woven geotextile with a minimum width of 36 in. The fabric should conform to the requirements in ASTM designation D6461.

Silt Fence SE-1

- Wooden stakes should be commercial quality lumber of the size and shape shown on the plans. Each stake should be free from decay, splits or cracks longer than the thickness of the stake or other defects that would weaken the stakes and cause the stakes to be structurally unsuitable.
- Staples used to fasten the fence fabric to the stakes should be not less than 1.75 in. long and should be fabricated from 15-gauge or heavier wire. The wire used to fasten the tops of the stakes together when joining two sections of fence should be 9 gauge or heavier wire. Galvanizing of the fastening wire will not be required.

Heavy-Duty Silt Fence

- Some silt fence has a wire backing to provide additional support, and there are products that may use prefabricated plastic holders for the silt fence and use metal posts instead of wood stakes.

Installation Guidelines – Traditional Method

Silt fences are to be constructed on a level contour. Sufficient area should exist behind the fence for ponding to occur without flooding or overtopping the fence.

- A trench should be excavated approximately 6 in. wide and 6 in. deep along the line of the proposed silt fence (trenches should not be excavated wider or deeper than necessary for proper silt fence installation).
- Bottom of the silt fence should be keyed-in a minimum of 12 in.
- Posts should be spaced a maximum of 6 ft. apart and driven securely into the ground a minimum of 18 in. or 12 in. below the bottom of the trench.
- When standard strength geotextile is used, a plastic or wire mesh support fence should be fastened securely to the upslope side of posts using heavy-duty wire staples at least 1 in. long. The mesh should extend into the trench.
- When extra-strength geotextile and closer post spacing are used, the mesh support fence may be eliminated.
- Woven geotextile should be purchased in a long roll, then cut to the length of the barrier. When joints are necessary, geotextile should be spliced together only at a support post, with a minimum 6 in. overlap and both ends securely fastened to the post.
- The trench should be backfilled with native material and compacted.
- Construct the length of each reach so that the change in base elevation along the reach does not exceed 1/3 the height of the barrier; in no case should the reach exceed 500 ft.
- Cross barriers should be a minimum of 1/3 and a maximum of ½ the height of the linear barrier.
- See typical installation details at the end of this fact sheet.

Silt Fence SE-1

Installation Guidelines - Static Slicing Method

- Static Slicing is defined as insertion of a narrow blade pulled behind a tractor, similar to a plow blade, at least 10 in. into the soil while at the same time pulling silt geotextile fabric into the ground through the opening created by the blade to the depth of the blade. Once the geotextile is installed, the soil is compacted using tractor tires.
- This method will not work with pre-fabricated, wire backed silt fence.
- Benefits:
  - Ease of installation (most often done with a 2-person crew).
  - Minimal soil disturbance.
  - Better level of compaction along fence, less susceptible to undercutting
  - Uniform installation.
- Limitations:
  - Does not work in shallow or rocky soils.
  - Complete removal of geotextile material after use is difficult.
  - Be cautious when digging near potential underground utilities.

Inspection and Maintenance

- BMPs must be inspected in accordance with General Permit requirements for the associated project type and risk level. It is recommended that at a minimum, BMPs be inspected weekly, prior to forecasted rain events, daily during extended rain events, and after the conclusion of rain events.
- Repair undercut silt fences.
- Repair or replace split, torn, slumping, or weathered fabric. The lifespan of silt fence fabric is generally 5 to 8 months.
- Silt fences that are damaged and become unsuitable for the intended purpose should be removed from the site of work, disposed, and replaced with new silt fence barriers.
- Sediment that accumulates in the BMP should be periodically removed in order to maintain BMP effectiveness. Sediment should be removed when the sediment accumulation reaches 1/3 of the barrier height.
- Silt fences should be left in place until the upgradient area is permanently stabilized. Until then, the silt fence should be inspected and maintained regularly.
- Remove silt fence when upgradient areas are stabilized. Fill and compact post holes and anchor trench, remove sediment accumulation, grade fence alignment to blend with adjacent ground, and stabilize disturbed area.

Silt Fence SE-1

References and Additional Resources

Construction Site Best Management Practices (BMPs) Manual CTSW-RT-24-425.11.1, California Department of Transportation (Caltrans), March 2024.

CGP Review #2, State Water Resources Control Board, 2014. Available online at: http://www.waterboards.ca.gov/water_issues/programs/stormwater/docs/training/cgp_review_issue2.pdf.

Manual of Standards of Erosion and Sediment Control Measures, Association of Bay Area Governments, May 1995.

Monitoring Data on Effectiveness of Sediment Control Techniques, Proceedings of World Water and Environmental Resources Congress, Barrett M. and Malina J. 2004.

National Management Measures to Control Nonpoint Source Pollution from Urban Areas, United States Environmental Protection Agency, 2002.

Proposed Guidance Specifying Management Measures for Sources of Nonpoint Pollution in Coastal Waters, Work Group-Working Paper, USEPA, April 1992.

Sedimentation and Erosion Control Practices, and Inventory of Current Practices (Draft), USEPA, 1990.

Southeastern Wisconsin Regional Planning Commission (SWRPC). Costs of Urban Nonpoint Source Water Pollution Control Measures. Technical Report No. 31. Southeastern Wisconsin Regional Planning Commission, Waukesha, WI. 1991.

Stormwater Management Manual for The Puget Sound Basin, Washington State Department of Ecology, Public Review Draft, 1991.

U.S. Environmental Protection Agency (USEPA). Stormwater Best Management Practices: Silt Fences. U.S. Environmental Protection Agency, Office of Water, Washington, DC, 2012.

U.S. Environmental Protection Agency (USEPA). Stormwater Management for Industrial Activities: Developing Pollution Prevention Plans and Best Management Practices. U.S. Environmental Protection Agency, Office of Water, Washington, DC, 1992.

Water Quality Management Plan for the Lake Tahoe Region, Volume II, Handbook of Management Practices, Tahoe Regional Planning Agency, November 1988.

Soil Stabilization BMP Research for Erosion and Sediment Controls: Cost Survey Technical Memorandum, State of California Department of Transportation (Caltrans), July 2007.

Erosion and Sediment Control Manual, Oregon Department of Environmental Quality, February 2005.

Silt Fence SE-1

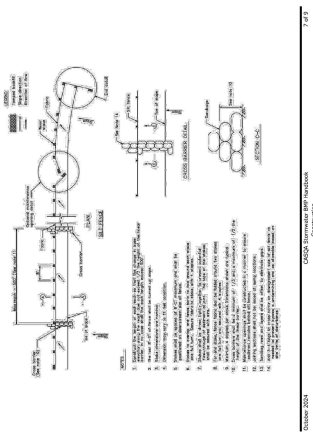

Silt Fence SE-1

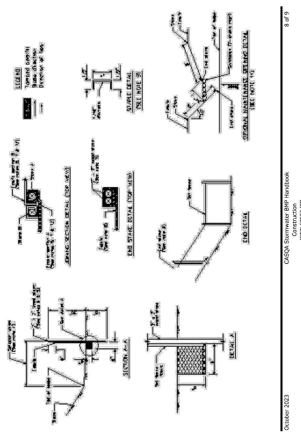

Silt Fence SE-1

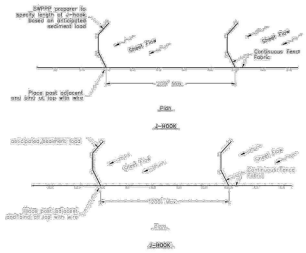

Street Sweeping and Vacuuming SE-7

Categories

- EC Erosion Control
- SE Sediment Control ☒
- TC Tracking Control ☑
- WE Wind Erosion Control
- NS Non-Stormwater Management Control
- WM Waste Management and Materials Pollution Control

Legend:
☑ **Primary Objective**
☒ **Secondary Objective**

Targeted Constituents

- Sediment ☑
- Nutrients
- Trash ☑
- Metals
- Bacteria
- Oil and Grease ☑
- Organics

Potential Alternatives

None

Copyright 2024 by the California Stormwater Quality Association

Description and Purpose

Street sweeping and vacuuming includes use of self-propelled and walk-behind equipment to remove sediment from streets and roadways and to clean paved surfaces in preparation for final paving. Sweeping and vacuuming prevents sediment from the project site from entering storm drains or receiving waters.

Suitable Applications

Sweeping and vacuuming are suitable anywhere sediment is tracked from the project site onto public or private paved streets and roads, typically at points of egress. Sweeping and vacuuming are also applicable during preparation of paved surfaces for final paving.

Limitations

- Sweeping and vacuuming may not be effective when sediment is wet or when tracked soil is caked (caked soil may need to be scraped loose).
- Sweeping may be less effective for fine particle soils (i.e., clay).

Implementation

- Controlling the number of points where vehicles can leave the site will allow sweeping and vacuuming efforts to be focused and perhaps save money.
- Inspect potential sediment tracking locations daily.

Underground Service Alert
Call: TOLL FREE 1-800 422-4133
TWO WORKING DAYS BEFORE YOU DIG

BENCHMARK

B.M. No. 220 - ELEV. = 1010.64 FD. 2½" CADT BRASS DISK IN TOP OF CURB, 20' S. OF SE COR BCR INTERSECTION OF VALLEY BLVD & RANCHO AVE. STAMPED "SB10 GPS 22.0 2000"

PROFESSIONAL ENGINEER — LEO ECKERT — No. 34087 — Exp. 12-31-27 — CIVIL — STATE OF CALIFORNIA

PREPARED BY:
GILBERT ENGINEERING COMPANY, INC.
P.O. BOX 940
GLENDORA, CALIFORNIA 91740
(626) 253-2443
email – gilbertcivil@gmail.com

CITY OF COLTON
PUBLIC WORKS DEPARTMENT
CITY ENGINEER
NAME: VICTOR ORTIZ, P.E. EXPIRES: 6/30/27
R.C.E: 73848
ACCEPTED: _____ DATE: _____
PLAN NO. #####

REVISIONS	DATE	APP'D

EROSION CONTROL PLAN
TRACT No. 20767
100 N. 2nd STREET

SCALE: NONE
HORZ: NONE
VERT: NONE
DATE: 03-03-26
SHEET 7 OF 10

Street Sweeping and Vacuuming SE-7

- Visible sediment tracking should be swept or vacuumed on a daily basis.
- Do not use kick brooms or sweeper attachments. These tend to spread the dirt rather than remove it.
- If not mixed with debris or trash, consider incorporating the removed sediment back into the project

Inspection and Maintenance

- Inspect BMPs in accordance with General Permit requirements for the associated project type and risk level. It is recommended that at a minimum, BMPs be inspected weekly, prior to forecasted rain events, daily during extended rain events, and after the conclusion of rain events.
- When actively in use, points of ingress and egress must be inspected daily.
- When tracked or spilled sediment is observed outside the construction limits, it must be removed at least daily. More frequent removal, even continuous removal, may be required in some jurisdictions.
- Be careful not to sweep up any unknown substance or any object that may be potentially hazardous.
- Adjust brooms frequently; maximize efficiency of sweeping operations.
- After sweeping is finished, properly dispose of sweeper wastes at an approved dumpsite.

References and Additional Resources

Construction Site Best Management Practices (BMPs) Manual CTSW-RT-24-425.11.1, California Department of Transportation (Caltrans), March 2024.

Storm Drain Inlet Protection SE-10

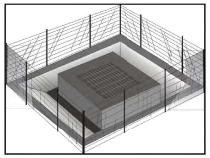

Categories

EC	Erosion Control	
SE	Sediment Control	☑
TC	Tracking Control	
WE	Wind Erosion Control	
NS	Non-Stormwater Management Control	
WM	Waste Management and Materials Pollution Control	

Legend:
☑ **Primary Category**
▣ **Secondary Category**

Targeted Constituents

Sediment	☑
Nutrients	
Trash	▣
Metals	
Bacteria	
Oil and Grease	
Organics	

Potential Alternatives

SE-1 Silt Fence
SE-5 Fiber Rolls
SE-6 Gravel Bag Berm
SF-8 Sandbag Barrier
SE-14 Biofilter Bags
SE-13 Compost Socks and Berms

Copyright 2024 by the California Stormwater Quality Association

Description and Purpose

Storm drain inlet protection consists of a sediment filter or an impounding area in, around or upstream of a storm drain, drop inlet, or curb inlet. Storm drain inlet protection measures temporarily pond runoff before it enters the storm drain, allowing sediment to settle. Some filter configurations also remove sediment by filtering, but usually the ponding action results in the greatest sediment reduction. Temporary geotextile storm drain inserts attach underneath storm drain grates to capture and filter storm water.

Suitable Applications

- Every storm drain inlet receiving runoff from unstabilized or otherwise active work areas should be protected. Inlet protection should be used in conjunction with other erosion and sediment controls to prevent sediment-laden stormwater and non-stormwater discharges from entering the storm drain system.

Limitations

- Drainage area should not exceed 1 acre.
- In general straw bales should not be used as inlet protection.
- Requires an adequate area for water to pond without encroaching into portions of the roadway subject to traffic.
- Sediment removal may be inadequate to prevent sediment discharges in high flow conditions or if runoff is heavily sediment laden. If high flow conditions are expected, use

Storm Drain Inlet Protection SE-10

other onsite sediment trapping techniques in conjunction with inlet protection.

- Frequent maintenance is required.
- Limit drainage area to 1 acre maximum. For drainage areas larger than 1 acre, runoff should be routed to a sediment-trapping device designed for larger flows. See BMPs SE-2, Sediment Basin, and SE-3, Sediment Traps.
- Excavated drop inlet sediment traps are appropriate where relatively heavy flows are expected, and overflow capability is needed.

Implementation

General

Inlet control measures presented in this handbook should not be used for inlets draining more than one acre. Runoff from larger disturbed areas should be first routed through SE-2, Sediment Basin or SE-3, Sediment Trap and/or used in conjunction with other drainage control, erosion control, and sediment control BMPs to protect the site. Different types of inlet protection are appropriate for different applications depending on site conditions and the type of inlet. Alternative methods are available in addition to the methods described/shown herein such as prefabricated inlet insert devices, or gutter protection devices.

Design and Layout

Identify existing and planned storm drain inlets that have the potential to receive sediment-laden surface runoff. Determine if storm drain inlet protection is needed and which method to use.

- The key to successful and safe use of storm drain inlet protection devices is to know where runoff that is directed toward the inlet to be protected will pond or be diverted as a result of installing the protection device.
  - Determine the acceptable location and extent of ponding in the vicinity of the drain inlet. The acceptable location and extent of ponding will influence the type and design of the storm drain inlet protection device.
  - Determine the extent of potential runoff diversion caused by the storm drain inlet protection device. Runoff ponded by inlet protection devices may flow around the device and towards the next downstream inlet. In some cases, this is acceptable; in other cases, serious erosion or downstream property damage can be caused by these diversions. The possibility of runoff diversions will influence whether or not storm drain inlet protection is suitable; and, if suitable, the type and design of the device.
- The location and extent of ponding and the extent of diversion, can usually be controlled through appropriate placement of the inlet protection device. In some cases, moving the inlet protection device a short distance upstream of the actual inlet can provide more efficient sediment control, limit ponding to desired areas, and prevent or control diversions.
- Seven types of inlet protection are presented below. However, it is recognized that other effective methods and proprietary devices exist and may be selected.

Storm Drain Inlet Protection SE-10

- Silt Fence: Appropriate for drainage basins with less than a 5% slope, sheet flows, and flows under 0.5 cfs.
- Excavated Drop Inlet Sediment Trap: An excavated area around the inlet to trap sediment (SE-3).
- Gravel bag barrier: Used to create a small sediment trap upstream of inlets on sloped paved streets. Appropriate for sheet flow or when concentrated flow may exceed 0.5 cfs, and where overtopping is required to prevent flooding.
- Block and Gravel Filter: Appropriate for flows greater than 0.5 cfs.
- Temporary Geotextile Storm drain Inserts: Different products provide different features. Refer to manufacturer details for targeted pollutants and additional features.
- Biofilter Bag Barrier: Used to create a small retention area upstream of inlets and can be located on pavement or soil. Biofilter bags slowly filter runoff allowing sediment to settle out. Appropriate for flows under 0.5 cfs.
- Compost Socks: Allow filtered run-off to pass through the compost while retaining sediment and potentially other pollutants (SE-13). Appropriate for flows under 1.0 cfs
- Select the appropriate type of inlet protection and design as referred to or as described in this fact sheet.
- Provide area around the inlet for water to pond without flooding structures and property.
- Grates and spaces around all inlets should be sealed to prevent seepage of sediment-laden water.
- Excavate sediment sumps (where needed) 1 to 2 ft with 2:1 side slopes around the inlet.

Installation

- ***DI Protection Type 1 - Silt Fence*** - Similar to constructing a silt fence; see BMP SE-1, Silt Fence. Do not place fabric underneath the inlet grate since the collected sediment may fall into the drain inlet when the fabric is removed or replaced and water flow through the grate will be blocked resulting in flooding. See typical Type 1 installation details at the end of this fact sheet.
  1. Excavate a trench approximately 6 in. wide and 6 in. deep along the line of the silt fence inlet protection device.
  2. Place 2 in. by 2 in. wooden stakes around the perimeter of the inlet a maximum of 3 ft apart and drive them at least 18 in. into the ground or 12 in. below the bottom of the trench. The stakes should be at least 48 in.
  3. Lay fabric along bottom of trench, up side of trench, and then up stakes. See SE-1, Silt Fence, for details. The maximum silt fence height around the inlet is 24 in.

Storm Drain Inlet Protection SE-10

4. Staple the filter fabric (for materials and specifications, see SE-1, Silt Fence) to wooden stakes. Use heavy-duty wire staples at least 1 in. in length.
5. Backfill the trench with gravel or compacted earth all the way around.

- ***DI Protection Type 2 - Excavated Drop Inlet Sediment Trap*** - Install filter fabric fence in accordance with DI Protection Type 1. Size excavated trap to provide a minimum storage capacity calculated at the rate 67 yd³/acre of drainage area. See typical Type 2 installation details at the end of this fact sheet.
- ***DI Protection Type 3 - Gravel bag*** - Flow from a severe storm should not overtop the curb. In areas of high clay and silts, use filter fabric and gravel as additional filter media. Construct gravel bags in accordance with SE-6, Gravel Bag Berm. Gravel bags should be used due to their high permeability. See typical Type 3 installation details at the end of this fact sheet.
  1. Construct on gently sloping street.
  2. Leave room upstream of barrier for water to pond and sediment to settle.
  3. Place several layers of gravel bags – overlapping the bags and packing them tightly together.
  4. Leave gap of one bag on the top row to serve as a spillway. Flow from a severe storm (e.g., 10-year storm) should not overtop the curb.
- ***DI Protection Type 4 – Block and Gravel Filter*** - Block and gravel filters are suitable for curb inlets commonly used in residential, commercial, and industrial construction. See typical Type 4 installation details at the end of this fact sheet.
  1. Place hardware cloth or comparable wire mesh with 0.5 in. openings over the drop inlet so that the wire extends a minimum of 1 ft beyond each side of the inlet structure. If more than one strip is necessary, overlap the strips. Place woven geotextile over the wire mesh.
  2. Place concrete blocks lengthwise on their sides in a single row around the perimeter of the inlet, so that the open ends face outward, not upward. The ends of adjacent blocks should abut. The height of the barrier can be varied, depending on design needs, by stacking combinations of blocks that are 4 in., 8 in., and 12 in. wide. The row of blocks should be at least 12 in. but no greater than 24 in. high.
  3. Place wire mesh over the outside vertical face (open end) of the concrete blocks to prevent stone from being washed through the blocks. Use hardware cloth or comparable wire mesh with 0.5 in. opening.
  4. Pile washed stone against the wire mesh to the top of the blocks. Use 0.75 to 3 in.
- ***DI Protection Type 5 – Temporary Geotextile Insert (proprietary)*** – Many types of temporary inserts are available. Most inserts fit underneath the grate of a drop inlet or inside of a curb inlet and are fastened to the outside of the grate or curb. These inserts are

Storm Drain Inlet Protection SE-10

removable, and many can be cleaned and reused. Installation of these inserts differs between manufacturers. Please refer to manufacturer instruction for installation of proprietary devices.

- ***DI Protection Type 6 - Biofilter bags*** – Biofilter bags may be used as a substitute for gravel bags in low-flow situations. Biofilter bags should conform to specifications detailed in SE-14, Biofilter bags.
  1. Construct in a gently sloping area.
  2. Biofilter bags should be placed around inlets to intercept runoff flows.
  3. All bag joints should overlap by 6 in.
  4. Leave room upstream for water to pond and for sediment to settle out.
  5. Stake bags to the ground as described in the following detail. Stakes may be omitted if bags are placed on a paved surface.
- ***DI Protection Type 7 – Compost Socks*** – A compost sock can be assembled on site by filling a mesh sock (e.g., with a pneumatic blower). Compost socks do not require special trenching compared to other sediment control methods (e.g., silt fence). Compost socks should conform to specification detailed in SE-13, Compost Socks and Berms.

Inspection and Maintenance

- BMPs must be inspected in accordance with General Permit requirements for the associated project type and risk level. It is recommended that at a minimum, BMPs be inspected weekly, prior to forecasted rain events, daily during extended rain events, and after the conclusion of rain events.
- Silt Fences. If the fabric becomes clogged, torn, or degrades, it should be replaced. Make sure the stakes are securely driven in the ground and are in good shape (i.e., not bent, cracked, or splintered, and are reasonably perpendicular to the ground). Replace damaged stakes. At a minimum, remove the sediment behind the fabric fence when accumulation reaches one-third the height of the fence or barrier height.
- Gravel Filters. If the gravel becomes clogged with sediment, it should be carefully removed from the inlet and either cleaned or replaced. Since cleaning gravel at a construction site may be difficult, consider using the sediment-laden stone as fill material and put fresh stone around the inlet. Inspect bags for holes, gashes, and snags, and replace bags as needed. Check gravel bags for proper arrangement and displacement.
- Sediment that accumulates in the BMP should be periodically removed in order to maintain BMP effectiveness. Sediment should be removed when the sediment accumulation reaches one-third of the barrier height.
- Inspect and maintain temporary geotextile insert devices according to manufacturer's specifications.
- Remove storm drain inlet protection once the drainage area is stabilized.

Storm Drain Inlet Protection SE-10

- Clean and regrade area around the inlet and clean the inside of the storm drain inlet, as it should be free of sediment and debris at the time of final inspection.

References and Additional Resources

Construction Site Best Management Practices (BMPs) Manual CTSW-RT-24-425.11.1, California Department of Transportation (Caltrans), March 2024.

Stormwater Management Manual for The Puget Sound Basin, Washington State Department of Ecology, Public Review Draft, 1991.

Erosion and Sediment Control Manual Oregon Department of Environmental Quality, February 2005.

Storm Drain Inlet Protection SE-10

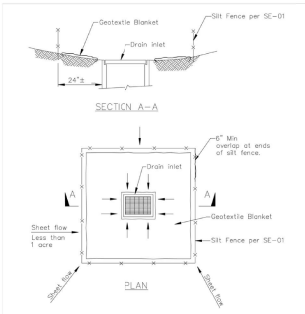

DI PROTECTION TYPE 1
NOT TO SCALE

NOTES:
1. For use in areas where grading has been completed and final soil stabilization and seeding are pending.
2. Not applicable in paved areas.
3. Not applicable with concentrated flows.

Storm Drain Inlet Protection SE-10

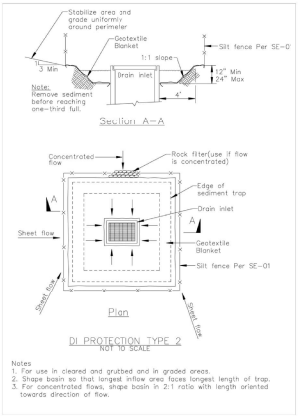

DI PROTECTION TYPE 2
NOT TO SCALE

Notes
1. For use in cleared and grubbed and in graded areas.
2. Shape basin so that longest inflow area faces longest length of trap.
3. For concentrated flows, shape basin in 2:1 ratio with length oriented towards direction of flow.

Storm Drain Inlet Protection SE-10

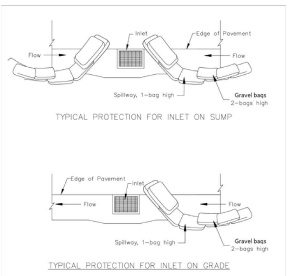

NOTES:
1. Intended for short-term use.
2. Use to inhibit non-storm water flow.
3. Allow for proper maintenance and cleanup.
4. Bags must be removed after adjacent operation is completed
5. Not applicable in areas with high silts and clays without filter fabric.
6. Protection can be effective even if it is not immediately adjacent to the inlet provided that the inlet is protected from potential sources of pollution.

DI PROTECTION TYPE 3
NOT TO SCALE

Underground Service Alert
Call: TOLL FREE
1-800
422-4133
TWO WORKING DAYS BEFORE YOU DIG

BENCHMARK

B.M. No. 220 - ELEV. = 1010.64 FD. 2½" CADT BRASS DISK IN TOP OF CURB, 20' S. OF SE COR BCR INTERSECTION OF VALLEY BLVD & RANCHO AVE. STAMPED "SB10 GPS 22.0 2000"

PROFESSIONAL ENGINEER
ED ECKERT
No. 34087
Exp. 12-31-27
CIVIL
STATE OF CALIFORNIA

PREPARED BY:
GILBERT ENGINEERING COMPANY, INC.
P.O. BOX 940
GLENDORA, CALIFORNIA 91740
(626) 253-2443
email – gilbertcivil@gmail.com

CITY OF COLTON
PUBLIC WORKS DEPARTMENT
CITY ENGINEER
NAME: VICTOR ORTIZ, P.E. EXPIRES: 6/30/27
R.C.E: 73848
ACCEPTED: _____ DATE: _____
PLAN NO. #####

REVISIONS	DATE	APP'D
EROSION CONTROL PLAN TRACT No. 20787 100 N. 2nd STREET	SCALE NONE	
	HORZ: NONE	
	VERT: NONE	
	DATE: 03-03-26	
	SHEET 8 OF 10	

Stabilized Construction Entrance/Exit TC-1

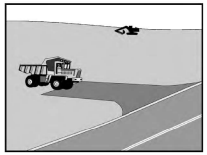

Categories

EC	Erosion Control	☐
SE	Sediment Control	☐
TC	Tracking Control	☑
WE	Wind Erosion Control	
NS	Non-Stormwater Management Control	
WM	Waste Management and Materials Pollution Control	

Legend:
☑ **Primary Objective**
☐ **Secondary Objective**

Targeted Constituents

Sediment	☑
Nutrients	
Trash	
Metals	
Bacteria	
Oil and Grease	
Organics	

Potential Alternatives

None

Copyright 2024 by the California Stormwater Quality Association

Description and Purpose

A stabilized construction access is defined by a point of entrance/exit to a construction site that is stabilized to reduce the tracking of mud and dirt onto public roads by construction vehicles.

Suitable Applications

Use at construction sites:

- Where dirt or mud can be tracked onto public roads.
- Adjacent to water bodies.
- Where poor soils are encountered.
- Where dust is a problem during dry weather conditions.

Limitations

- Entrances and exits require periodic top dressing with additional stones.
- This BMP should be used in conjunction with street sweeping on adjacent public right of way.
- Entrances and exits should be constructed on level ground only.
- Stabilized construction entrances are rather expensive to construct and when a wash rack is included, a sediment trap of some kind must also be provided to collect wash water runoff.

Stabilized Construction Entrance/Exit TC-1

Implementation

General

A stabilized construction entrance is a pad of aggregate underlain with filter cloth located at any point where traffic will be entering or leaving a construction site to or from a public right of way, street, alley, sidewalk, or parking area. The purpose of a stabilized construction entrance is to reduce or eliminate the tracking of sediment onto public rights of way or streets. Reducing tracking of sediments and other pollutants onto paved roads helps prevent deposition of sediments into local storm drains and production of airborne dust.

Where traffic will be entering or leaving the construction site, a stabilized construction entrance should be used. NPDES permits require that appropriate measures be implemented to prevent tracking of sediments onto paved roadways, where a significant source of sediments is derived from mud and dirt carried out from unpaved roads and construction sites.

Stabilized construction entrances are moderately effective in removing sediment from equipment leaving a construction site. The entrance should be built on level ground. Advantages of the Stabilized Construction Entrance/Exit is that it does remove some sediment from equipment and serves to channel construction traffic in and out of the site at specified locations. Efficiency is greatly increased when a washing rack is included as part of a stabilized construction entrance/exit.

Design and Layout

- Construct on level ground where possible.
- Select 3 to 6 in. diameter stones.
- Use minimum depth of stones of 12 in. or as recommended by soils engineer.
- Construct length of 50 ft or maximum site will allow, and 10 ft minimum width or to accommodate traffic.
- Rumble racks constructed of steel panels with ridges and installed in the stabilized entrance/exit will help remove additional sediment and to keep adjacent streets clean.
- Provide ample turning radii as part of the entrance.
- Limit the points of entrance/exit to the construction site.
- Limit speed of vehicles to control dust.
- Properly grade each construction entrance/exit to prevent runoff from leaving the construction site.
- Route runoff from stabilized entrances/exits through a sediment trapping device before discharge.
- Design stabilized entrance/exit to support heaviest vehicles and equipment that will use it.

Stabilized Construction Entrance/Exit TC-1

- Select construction access stabilization (aggregate, asphaltic concrete, concrete) based on longevity, required performance, and site conditions. Do not use asphalt concrete (AC) grindings for stabilized construction access/roadway.
- If aggregate is selected, place crushed aggregate over geotextile fabric to at least 12 in. depth, or place aggregate to a depth recommended by a geotechnical engineer. A crushed aggregate greater than 3 in. but smaller than 1 in. should be used.
- Designate combination or single purpose entrances and exits to the construction site.
- Require that all employees, subcontractors, and suppliers utilize the stabilized construction access.
- Implement SE-7, Street Sweeping and Vacuuming, as needed.
- All exit locations intended to be used for more than a two-week period should have stabilized construction entrance/exit BMPs.

Inspection and Maintenance

- Inspect and verify that activity-based BMPs are in place prior to the commencement of associated activities. While activities associated with the BMPs are under way, inspect BMPs in accordance with General Permit requirements for the associated project type and risk level. It is recommended that at a minimum, BMPs be inspected weekly, prior to forecasted rain events, daily during extended rain events, and after the conclusion of rain events.
- Inspect local roads adjacent to the site daily. Sweep or vacuum to remove visible accumulated sediment.
- Remove aggregate, separate and dispose of sediment if construction entrance/exit is clogged with sediment.
- Keep all temporary roadway ditches clear.
- Check for damage and repair as needed.
- Replace gravel material when surface voids are visible.
- Remove all sediment deposited on paved roadways within 24 hours.
- Remove gravel and filter fabric at completion of construction

References and Additional Resources

Construction Site Best Management Practices (BMPs) Manual, CTSW-RT-24-425.11.1, California Department of Transportation (Caltrans), March 2024.

Manual of Standards of Erosion and Sediment Control Measures, Association of Bay Area Governments, May 1995.

National Management Measures to Control Nonpoint Source Pollution from Urban Areas, USEPA Agency, 2002.

Stabilized Construction Entrance/Exit TC-1

Proposed Guidance Specifying Management Measures for Sources of Nonpoint Pollution in Coastal Waters, Work Group Working Paper, USEPA, April 1992.

Stormwater Management of the Puget Sound Basin, Technical Manual, Publication #91-75, Washington State Department of Ecology, February 1992.

Virginia Erosion and Sedimentation Control Handbook, Virginia Department of Conservation and Recreation, Division of Soil and Water Conservation, 1991.

Guidance Specifying Management Measures for Nonpoint Pollution in Coastal Waters, EPA 840-B-92-002, USEPA, Office of Water, Washington, DC, 1993.

Water Quality Management Plan for the Lake Tahoe Region, Volume II, Handbook of Management Practices, Tahoe Regional Planning Agency, November 1988.

Stabilized Construction Entrance/Exit TC-1

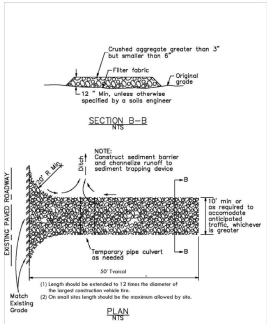

Stabilized Construction Entrance/Exit TC-1

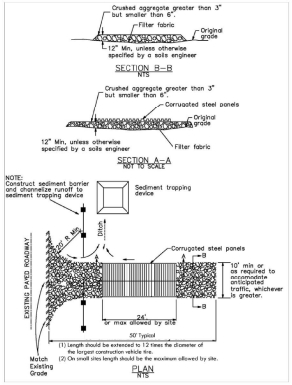

Material Use WM-2

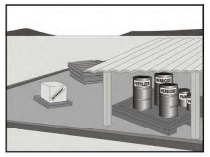

Categories

EC	Erosion Control	
SE	Sediment Control	
TC	Tracking Control	
WE	Wind Erosion Control	
NS	Non-Stormwater Management Control	
WM	Waste Management and Materials Pollution Control	☑

Legend:
☑ **Primary Category**
☒ **Secondary Category**

Targeted Constituents

Sediment	☑
Nutrients	☑
Trash	☑
Metals	☑
Bacteria	
Oil and Grease	☑
Organics	☑

Potential Alternatives

None

Copyright 2024 by the California Stormwater Quality Association

Description and Purpose

Prevent or reduce the discharge of pollutants to the storm drain system or watercourses from material use by using alternative products, minimizing hazardous material use onsite, and training employees and subcontractors.

Suitable Applications

This BMP is suitable for use at all construction projects. These procedures apply when the following materials are used or prepared onsite:

- Pesticides and herbicides
- Fertilizers
- Detergents
- Petroleum products such as fuel, oil, and grease
- Asphalt and other concrete components
- Other hazardous chemicals such as acids, lime, glues, adhesives, paints, solvents, and curing compounds
- Other materials that may be detrimental if released to the environment

Limitations

Safer alternative building and construction products may not be available or suitable in every instance.

Material Use WM-2

Implementation

The following steps should be taken to minimize risk:

- Minimize use of hazardous materials onsite.
- Follow manufacturer instructions regarding uses, protective equipment, ventilation, flammability, and mixing of chemicals.
- Train personnel who use pesticides. The California Department of Pesticide Regulation and county agricultural commissioners license pesticide dealers, certify pesticide applicators, and conduct onsite inspections.
- The preferred method of termiticide application is soil injection near the existing or proposed structure foundation/slab; however, if not feasible, soil drench application of termiticides should follow EPA label guidelines and the following recommendations (most of which are applicable to most pesticide applications):
  - Do not treat soil that is water-saturated or frozen.
  - Application shall not commence within 24-hours of a predicted precipitation event with a 40% or greater probability. Weather tracking must be performed on a daily basis prior to termiticide application and during the period of termiticide application.
  - Do not allow treatment chemicals to runoff from the target area. Apply proper quantity to prevent excess runoff. Provide containment for and divert stormwater from application areas using berms or diversion ditches during application.
  - Dry season: Do not apply within 10 feet of storm drains. Do not apply within 25 feet of aquatic habitats (such as, but not limited to, lakes; reservoirs; rivers; permanent streams; marshes or ponds; estuaries; and commercial fish farm ponds).
  - Wet season: Do not apply within 50 feet of storm drains or aquatic habitats (such as, but not limited to, lakes; reservoirs rivers; permanent streams; marshes or ponds; estuaries; and commercial fish farm ponds) unless a vegetative buffer is present (if so, refer to dry season requirements).
  - Do not make on-grade applications when sustained wind speeds are above 10 mph (at application site) at nozzle end height.
  - Cover treatment site prior to a rain event in order to prevent run-off of the pesticide into non-target areas. The treated area should be limited to a size that can be backfilled and/or covered by the end of the work shift. Backfilling or covering of the treated area shall be done by the end of the same work shift in which the application is made.
  - The applicator must either cover the soil him/herself or provide written notification of the above requirement to the contractor on site and to the person commissioning the application (if different than the contractor). If notice is provided to the contractor or the person commissioning the application, then they are responsible under the Federal Insecticide Fungicide, and Rodenticide Act (FIFRA) to ensure that: 1) if the concrete slab cannot be poured over the treated soil within 24 hours of application, the treated soil is covered with a waterproof covering (such as polyethylene sheeting), and 2) the treated soil is covered if precipitation is predicted to occur before the concrete slab is scheduled to be poured.

Material Use WM-2

- Do not over-apply fertilizers, herbicides, and pesticides. Prepare only the amount needed. Follow the recommended usage instructions. Over-application is expensive and environmentally harmful. Unless on steep slopes, till fertilizers into the soil rather than hydraulic application. Apply surface dressings in several smaller applications, as opposed to one large application, to allow time for infiltration and to avoid excess material being carried offsite by runoff. Do not apply these chemicals before predicted rainfall.
- Train employees and subcontractors in proper material use.
- Supply Material Safety Data Sheets (MSDS) for all materials.
- Dispose of latex paint and paint cans, used brushes, rags, absorbent materials, and drop cloths, when thoroughly dry and are no longer hazardous, with other construction debris.
- Do not remove the original product label; it contains important safety and disposal information. Use the entire product before disposing of the container.
- Mix paint indoors or in a containment area. Never clean paintbrushes or rinse paint containers into a street, gutter, storm drain, or watercourse. Dispose of any paint thinners, residue, and sludge(s) that cannot be recycled, as hazardous waste.
- For water-based paint, clean brushes to the extent practicable, and rinse to a drain leading to a sanitary sewer where permitted or contain for proper disposal off site. For oil-based paints, clean brushes to the extent practicable, and filter and reuse thinners and solvents.
- Use recycled and less hazardous products when practical. Recycle residual paints, solvents, non-treated lumber, and other materials.
- Use materials only where and when needed to complete the construction activity. Use safer alternative materials as much as possible. Reduce or eliminate use of hazardous materials onsite when practical.
- Document the location, time, chemicals applied, and applicator's name and qualifications.
- Keep an ample supply of spill cleanup material near use areas. Train employees in spill clean up procedures.
- Avoid exposing applied materials to rainfall and runoff unless sufficient time has been allowed for them to dry.
- Discontinue use of erodible landscape material within 2 days prior to a forecasted rain event and materials should be covered and/or bermed.
- Provide containment for material use areas such as masons' areas or paint mixing/preparation areas to prevent materials/pollutants from entering stormwater.

Material Use WM-2

Inspection and Maintenance

- Inspect and verify that activity-based BMPs are in place prior to the commencement of associated activities.
- BMPs must be inspected in accordance with General Permit requirements for the associated project type and risk level. It is recommended that at a minimum, BMPs be inspected weekly, prior to forecasted rain events, daily during extended rain events, and after the conclusion of rain events.
- Ensure employees and subcontractors throughout the job are using appropriate practices

References and Additional Resources

Blueprint for a Clean Bay: Best Management Practices to Prevent Stormwater Pollution from Construction Related Activities; Santa Clara Valley Nonpoint Source Pollution Control Program, 1995.

Coastal Nonpoint Pollution Control Program: Program Development and Approval Guidance; Working Group Working Paper; USEPA, April 1992.

Comments on Risk Assessments Risk Reduction Options for Cypermethrin: Docket No. OPP-2005-0293; California Stormwater Quality Association (CASQA) letter to USEPA, 2006. Environmental Hazard and General Labeling for Pyrethroid Non-Agricultural Outdoor Products, EPA-HQ-OPP-2008-0331-0021; USEPA, 2008.

Construction Site Best Management Practices (BMPs) Manual, CTSW-RT-24-425.11.1, California Department of Transportation (Caltrans), March 2024.

Stormwater Management for Construction Activities; Developing Pollution Prevention Plans and Best Management Practice, EPA 832-R-92005; USEPA, April 1992.

Underground Service Alert
Call: TOLL FREE
1-800
422-4133
TWO WORKING DAYS BEFORE YOU DIG

BENCHMARK

B.M. No. 220 - ELEV. = 1010.64
FD. 2½" CADT BRASS DISK IN TOP OF CURB, 20' S. OF SE COR BCR INTERSECTION OF VALLEY BLVD & RANCHO AVE. STAMPED "SB10 GPS 22.0 2000"

PROFESSIONAL ENGINEER
GILBERT ENGINEERING
No. 34087
Exp. 12-31-27
CIVIL
STATE OF CALIFORNIA

PREPARED BY:
GILBERT ENGINEERING COMPANY, INC.
P.O. BOX 940
GLENDORA, CALIFORNIA 91740
(626) 253-2443
email - gilbertcivil@gmail.com

CITY OF COLTON
PUBLIC WORKS DEPARTMENT
CITY ENGINEER
NAME: VICTOR ORTIZ, P.E. EXPIRES: 6/30/27
R.C.E: 73848
ACCEPTED: _____ DATE: _____
PLAN NO. #####

REVISIONS	DATE	APP'D
EROSION CONTROL PLAN TRACT No. 20767 100 N. 2nd STREET	SCALE: NONE	
	HORZ: NONE	
	VERT: NONE	
	DATE: 03-03-26	
	SHEET 9 OF 10	

Concrete Waste Management WM-8

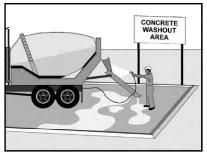

Categories

EC	Erosion Control	
SE	Sediment Control	
TC	Tracking Control	
WE	Wind Erosion Control	
NS	Non-Stormwater Management Control	☐
WM	Waste Management and Materials Pollution Control	☑

Legend:
☑ **Primary Category**
☐ **Secondary Category**

Targeted Constituents

Sediment	☑
Nutrients	
Trash	
Metals	☑
Bacteria	
Oil and Grease	
Organics	

Potential Alternatives

None

Copyright 2024 by the California Stormwater Quality Association

Description and Purpose

Prevent the discharge of pollutants to stormwater from concrete waste by conducting washout onsite or offsite in a designated area, and by employee and subcontractor training.

The General Permit incorporates Numeric Action Levels (NAL) for pH (see Section 2 of this handbook to determine your project's risk level and if you are subject to these requirements).

Many types of construction materials, including mortar, concrete, stucco, cement and block and their associated wastes have basic chemical properties that can raise pH levels outside of the permitted range. Additional care should be taken when managing these materials to prevent them from coming into contact with stormwater flows and raising pH to levels outside the accepted range.

Suitable Applications

Concrete waste management procedures and practices are implemented on construction projects where:

- Concrete is used as a construction material or where concrete dust and debris result from demolition activities.
- Slurries containing Portland cement concrete (PCC) are generated, such as from saw cutting, coring, grinding, grooving, and hydro-concrete demolition.
- Concrete trucks and other concrete-coated equipment are washed onsite.

Concrete Waste Management WM-8

- Mortar-mixing stations exist.
- Stucco mixing and spraying.
- See also NS-8, Vehicle and Equipment Cleaning.

Limitations

- Offsite washout of concrete wastes may not always be possible.
- Multiple washouts may be needed to assure adequate capacity and to allow for evaporation.

Implementation

The following steps will help reduce stormwater pollution from concrete wastes:

- Incorporate requirements for concrete waste management into material supplier and subcontractor agreements.
- Store dry and wet materials under cover, away from drainage areas. Refer to WM-1, Material Delivery and Storage for more information.
- Avoid mixing excess amounts of concrete.
- Perform washout of concrete trucks in designated areas only, where washout will not reach stormwater.
- Do not wash out concrete trucks into storm drains, open ditches, streets, streams or onto the ground. Trucks should always be washed out into designated facilities.
- Do not allow excess concrete to be dumped onsite, except in designated areas.
- For onsite washout:
  - On larger sites, it is recommended to locate washout areas at least 50 feet from storm drains, open ditches, or water bodies. Do not allow runoff from this area by constructing a temporary pit or bermed area large enough for liquid and solid waste.
  - Washout wastes into the temporary washout where the concrete can set, be broken up, and then disposed properly.
  - Washouts shall be implemented in a manner that prevents leaching to underlying soils. Washout containers must be water tight and washouts on or in the ground must be lined with a suitable impervious liner, typically a plastic type material.
- Do not wash sweepings from exposed aggregate concrete into the street or storm drain. Collect and return sweepings to aggregate base stockpile or dispose in the trash.
- See typical concrete washout installation details at the end of this fact sheet.

Education

- Educate employees, subcontractors, and suppliers on the concrete waste management techniques described herein.

Concrete Waste Management WM-8

- Arrange for contractor's superintendent or representative to oversee and enforce concrete waste management procedures.
- Discuss the concrete management techniques described in this BMP (such as handling of concrete waste and washout) with the ready-mix concrete supplier before any deliveries are made.

Concrete Demolition Wastes

- Stockpile concrete demolition waste in accordance with BMP WM-3, Stockpile Management.
- Dispose of or recycle hardened concrete waste in accordance with applicable federal, state or local regulations.

Concrete Slurry Wastes

- PCC and AC waste should not be allowed to enter storm drains or watercourses.
- PCC and AC waste should be collected and disposed of or placed in a temporary concrete washout facility (as described in Onsite Temporary Concrete Washout Facility, Concrete Transit Truck Washout Procedures below).
- A foreman or construction supervisor should monitor onsite concrete working tasks, such as saw cutting, coring, grinding and grooving to ensure proper methods are implemented.
- Saw-cut concrete slurry should not be allowed to enter storm drains or watercourses. Residue from grinding operations should be picked up by means of a vacuum attachment to the grinding machine or by sweeping. Saw cutting residue should not be allowed to flow across the pavement and should not be left on the surface of the pavement. See also NS-3, Paving and Grinding Operations; and WM-10, Liquid Waste Management.
- Concrete slurry residue should be disposed in a temporary washout facility (as described in Onsite Temporary Concrete Washout Facility, Concrete Transit Truck Washout Procedures, below) and allowed to dry. Dispose of dry slurry residue in accordance with WM-5, Solid Waste Management.

Onsite Temporary Concrete Washout Facility, Transit Truck Washout Procedures

- Temporary concrete washout facilities should be located a minimum of 50 ft from storm drain inlets, open drainage facilities, and watercourses. Each facility should be located away from construction traffic or access areas to prevent disturbance or tracking.
- A sign should be installed adjacent to each washout facility to inform concrete equipment operators to utilize the proper facilities.
- Temporary concrete washout facilities should be constructed above grade or below grade at the option of the contractor. Temporary concrete washout facilities should be constructed and maintained in sufficient quantity and size to contain all liquid and concrete waste generated by washout operations.

Concrete Waste Management WM-8

- Temporary washout facilities should have a temporary pit or bermed areas of sufficient volume to completely contain all liquid and waste concrete materials generated during washout procedures.
- Temporary washout facilities should be lined to prevent discharge to the underlying ground or surrounding area.
- Washout of concrete trucks should be performed in designated areas only.
- Only concrete from mixer truck chutes should be washed into concrete wash out.
- Concrete washout from concrete pumper bins can be washed into concrete pumper trucks and discharged into designated washout area or properly disposed of or recycled offsite.
- Once concrete wastes are washed into the designated area and allowed to harden, the concrete should be broken up, removed, and disposed of per WM-5, Solid Waste Management. Dispose of or recycle hardened concrete on a regular basis.
- Temporary Concrete Washout Facility (Type Above Grade)
  - Temporary concrete washout facility (type above grade) should be constructed as shown on the details at the end of this BMP, with a recommended minimum length and minimum width of 10 ft; however, smaller sites or jobs may only need a smaller washout facility. With any washout, always maintain a sufficient quantity and volume to contain all liquid and concrete waste generated by washout operations.
  - Materials used to construct the washout area should conform to the provisions detailed in their respective BMPs (e.g., SE-8 Sandbag Barrier).
  - Plastic lining material should be a minimum of 10 mil in polyethylene sheeting and should be free of holes, tears, or other defects that compromise the impermeability of the material.
  - Alternatively, portable removable containers can be used as above grade concrete washouts. Also called a "roll-off"; this concrete washout facility should be properly sealed to prevent leakage and should be removed from the site and replaced when the container reaches 75% capacity
- Temporary Concrete Washout Facility (Type Below Grade)
  - Temporary concrete washout facilities (type below grade) should be constructed as shown on the details at the end of this BMP, with a recommended minimum length and minimum width of 10 ft. The quantity and volume should be sufficient to contain all liquid and concrete waste generated by washout operations.
  - Lath and flagging should be commercial type.
  - Plastic lining material should be a minimum of 10 mil polyethylene sheeting and should be free of holes, tears, or other defects that compromise the impermeability of the material.

Concrete Waste Management WM-8

  - The base of a washout facility should be free of rock or debris that may damage a plastic liner.

Removal of Temporary Concrete Washout Facilities

- When temporary concrete washout facilities are no longer required for the work, the hardened concrete should be removed and properly disposed or recycled in accordance with federal, state or local regulations. Materials used to construct temporary concrete washout facilities should be removed from the site of the work and properly disposed or recycled in accordance with federal, state or local regulations.
- Holes, depressions or other ground disturbance caused by the removal of the temporary concrete washout facilities should be backfilled and repaired.

Inspection and Maintenance

- BMPs must be inspected in accordance with General Permit requirements for the associated project type and risk level. It is recommended that at a minimum, BMPs be inspected weekly, prior to forecasted rain events, daily during extended rain events, and after the conclusion of rain events.
- Temporary concrete washout facilities should be maintained to provide adequate holding capacity with a minimum freeboard of 4 in. for above grade facilities and 12 in. for below grade facilities. Maintaining temporary concrete washout facilities should include removing and disposing of hardened concrete and returning the facilities to a functional condition. Hardened concrete materials should be removed and properly disposed or recycled in accordance with federal, state or local regulations.
- Washout facilities must be cleaned, or new facilities must be constructed and ready for use once the washout is 75% full.
- Inspect washout facilities for damage (e.g. torn liner, evidence of leaks, signage, etc.). Repair all identified damage.

References and Additional Resources

Blueprint for a Clean Bay: Best Management Practices to Prevent Stormwater Pollution from Construction Related Activities; Santa Clara Valley Nonpoint Source Pollution Control Program, 1995.

Construction Site Best Management Practices (BMPs) Manual, CTSW-RT-24-425.11.1, California Department of Transportation (Caltrans), March 2024.

Stormwater Management for Construction Activities; Developing Pollution Prevention Plans and Best Management Practice, EPA 832-R-92005; USEPA, April 1992.

Concrete Waste Management WM-8

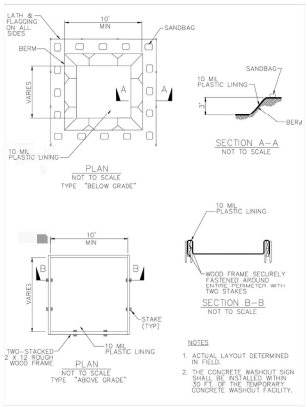

Concrete Waste Management WM-8

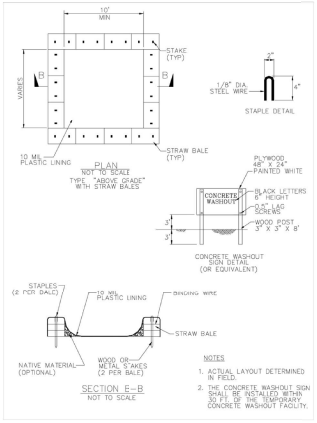

Sanitary/Septic Waste Management WM-9

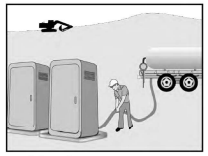

Categories

EC	Erosion Control	
SE	Sediment Control	
TC	Tracking Control	
WE	Wind Erosion Control	
NS	Non-Stormwater Management Control	
WM	Waste Management and Materials Pollution Control	☑

Legend:
☑ **Primary Category**
☐ **Secondary Category**

Targeted Constituents

Sediment	
Nutrients	☑
Trash	☑
Metals	
Bacteria	☑
Oil and Grease	
Organics	☑

Potential Alternatives

None

Copyright 2024 by the California Stormwater Quality Association

Description and Purpose

Proper sanitary and septic waste management prevent the discharge of pollutants to stormwater from sanitary and septic waste by providing convenient, well-maintained facilities, and arranging for regular service and disposal.

Suitable Applications

Sanitary septic waste management practices are suitable for use at all construction sites that use temporary or portable sanitary and septic waste systems.

Limitations

None identified.

Implementation

Sanitary or septic wastes should be treated or disposed of in accordance with state and local requirements. In many cases, one contract with a local facility supplier will be all that it takes to make sure sanitary wastes are properly disposed.

Storage and Disposal Procedures

- Temporary sanitary facilities should be located away from drainage facilities, watercourses, and from traffic circulation. If site conditions allow place portable facilities a minimum of 50 feet from drainage conveyances and traffic areas. When subjected to high winds or risk of high winds, temporary sanitary facilities should be secured to prevent overturning.

Sanitary/Septic Waste Management WM-9

- Temporary sanitary facilities must be equipped with containment to prevent discharge of pollutants to the stormwater drainage system of the receiving water.
- Consider safety as well as environmental implications before placing temporary sanitary facilities.
- Wastewater should not be discharged or buried within the project site.
- Sanitary and septic systems that discharge directly into sanitary sewer systems, where permissible, should comply with the local health agency, city, county, and sewer district requirements.
- Only reputable, licensed sanitary and septic waste haulers should be used.
- Sanitary facilities should be located in a convenient location.
- Temporary septic systems should treat wastes to appropriate levels before discharging.
- If using an onsite disposal system (OSDS), such as a septic system, local health agency requirements must be followed.
- Temporary sanitary facilities that discharge to the sanitary sewer system should be propery connected to avoid illicit discharges.
- Sanitary and septic facilities should be maintained in good working order by a licensed service.
- Regular waste collection by a licensed hauler should be arranged before facilities overflow
- If a spill does occur from a temporary sanitary facility, follow federal, state and local regulations for containment and clean-up.

Education

- Educate employees, subcontractors, and suppliers on sanitary and septic waste storage and disposal procedures.
- Educate employees, subcontractors, and suppliers of potential dangers to humans and the environment from sanitary and septic wastes.
- Instruct employees, subcontractors, and suppliers in identification of sanitary and septic waste.
- Hold regular meetings to discuss and reinforce the use of sanitary facilities (incorporate into regular safety meetings).
- Establish a continuing education program to indoctrinate new employees.

Inspection and Maintenance

- BMPs must be inspected in accordance with General Permit requirements for the associated project type and risk level. It is recommended that at a minimum, BMPs be inspected

Sanitary/Septic Waste Management WM-9

weekly, prior to forecasted rain events, daily during extended rain events, and after the conclusion of rain events.

- Arrange for regular waste collection.
- If high winds are expected, portable sanitary facilities must be secured with spikes or weighed down to prevent over turning.
- If spills or leaks from sanitary or septic facilities occur that are not contained and discharge from the site, non-visible sampling of site discharge may be required. Refer to the General Permit or to your project specific Construction Site Monitoring Plan to determine if and where sampling is required.

References and Additional Resources

Construction Site Best Management Practices (BMPs) Manual, CTSW-RT-24-425.11.1, California Department of Transportation (Caltrans), March 2024.

Stormwater Management for Construction Activities; Developing Pollution Prevention Plans and Best Management Practice, EPA 832-R-92005; USEPA, April 1992.

Underground Service Alert
Call: TOLL FREE 1-800 422-4133
TWO WORKING DAYS BEFORE YOU DIG

BENCHMARK

B.M. No. 220 - ELEV. = 1010.64
FD. 2¼" CADT BRASS DISK IN TOP OF CURB, 20' S. OF SE COR BCR INTERSECTION OF VALLEY BLVD & RANCHO AVE. STAMPED "SB10 GPS 22.0 2000"

PROFESSIONAL ENGINEER — ED ECKERT — No. 34087 — Exp. 12-31-27 — CIVIL — STATE OF CALIFORNIA

PREPARED BY:
GILBERT ENGINEERING COMPANY, INC.
P.O. BOX 940
GLENDORA, CALIFORNIA 91740
(626) 253-2443
email – gilbertcivil@gmail.com

CITY OF COLTON
PUBLIC WORKS DEPARTMENT
CITY ENGINEER
NAME: VICTOR ORTIZ, P.E. EXPIRES: 6/30/27
R.C.E: 73848
ACCEPTED: _____ DATE: _____
PLAN NO. #####

REVISIONS	DATE	APP'D

EROSION CONTROL PLAN
TRACT No. 20767
100 N. 2nd STREET

SCALE: NONE
HORZ: NONE
VERT: NONE
DATE: 03-03-26
SHEET 10 OF 10