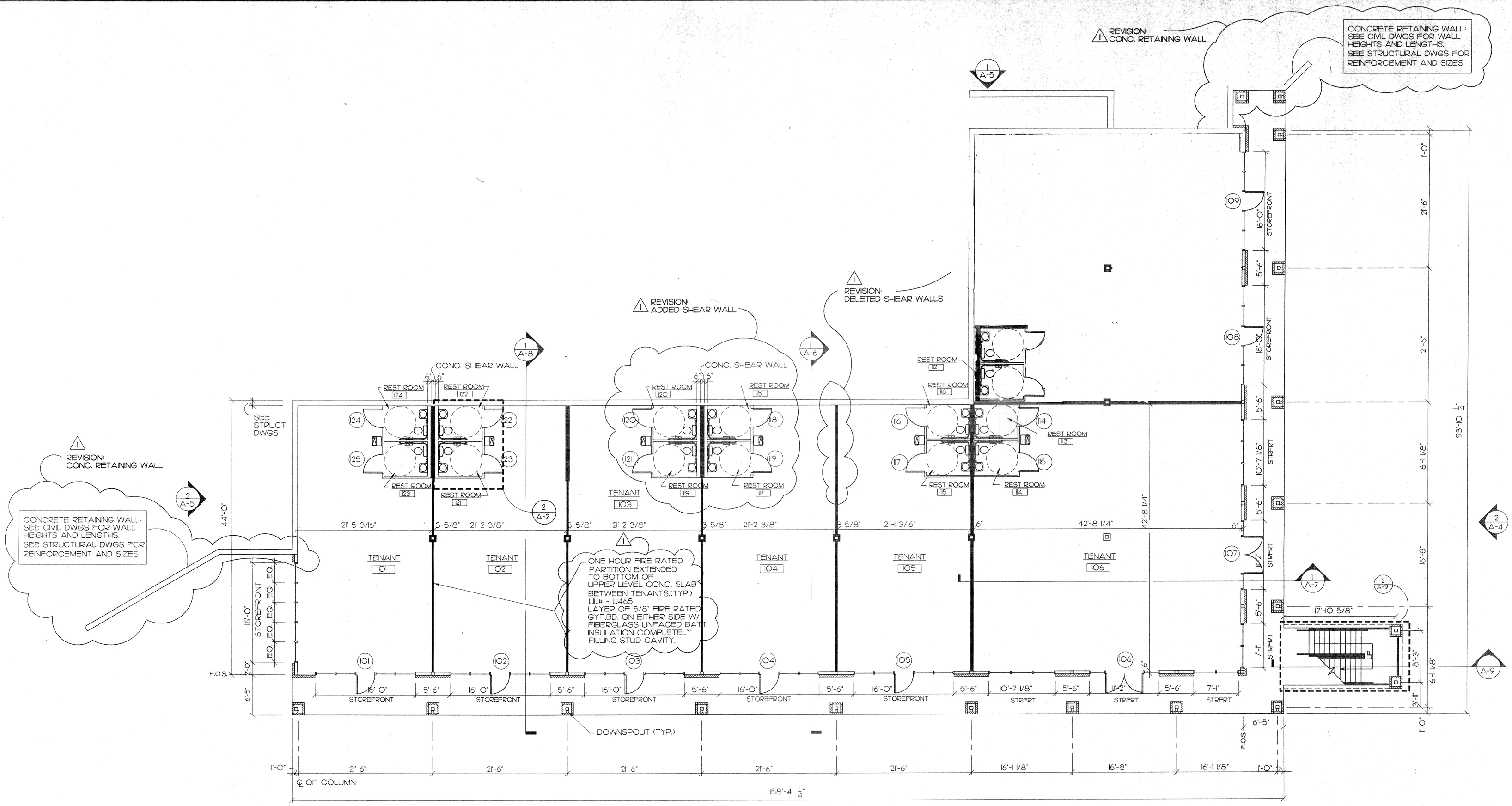


1 / A-2 LOWER LEVEL FLOOR PLAN 1/8"=1'-0"
BUILDING "A"

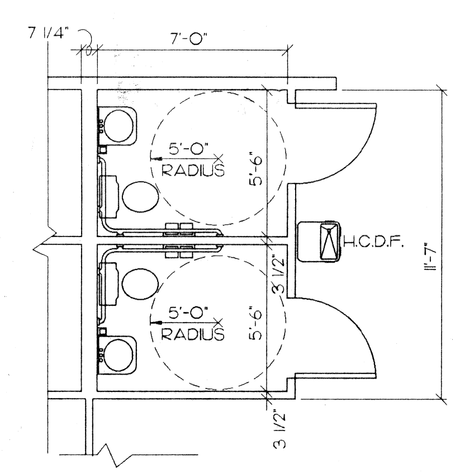


2 / A-2 RESTROOM (TYP.) 1/4"=1'-0"

97049FP1.DWG

| REVISIONS | BY |
|---|---|
| 1 REVISED RETAINING WALLS 12/15/98 | JSC |
| 1 REVISED FIREWALL NOTE 12/15/98 | JSC |

STATE OF GEORGIA DONNIE R. BREWSTER REGISTERED ARCHITECT


Brewster & Associates Architects
425 Broad St. Suite 101 Gainesville, GA. 30501
PHONE (770)536-8865 FAX (770)536-8542


A NEW DEVELOPMENT FOR:
MR. JIM WALTERS
GAINESVILLE, GEORGIA

| | |
|---|---|
| DRAWN | DRB/JSC |
| CHECKED | |
| DATE | 11/10/98 |
| SCALE | |
| JOB NO | 97049 |
| SHEET | A-2 |
| OF | 12 SHEETS |