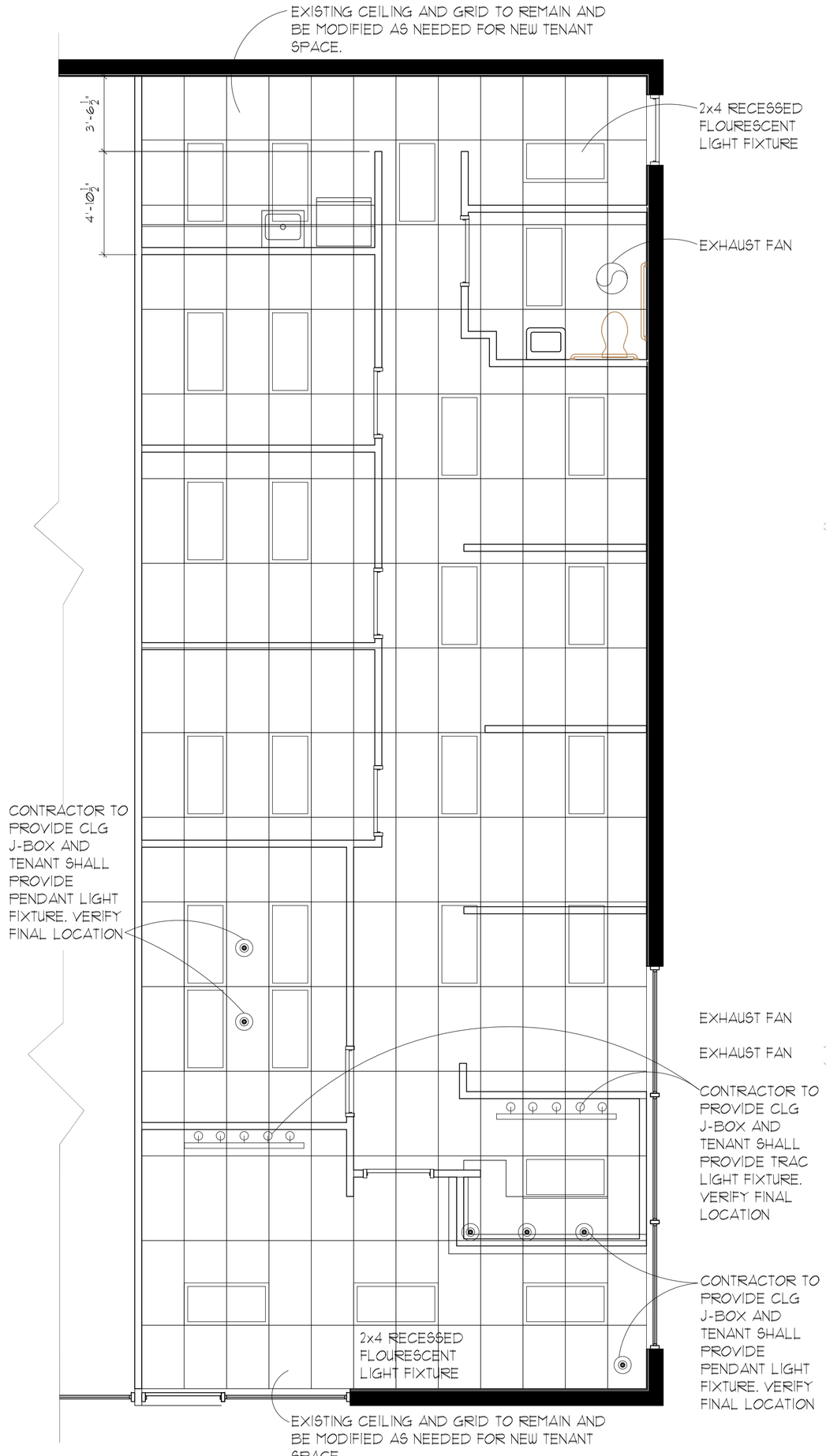

1 REFLECTED CLG. PLAN

1/4" = 1'-0"

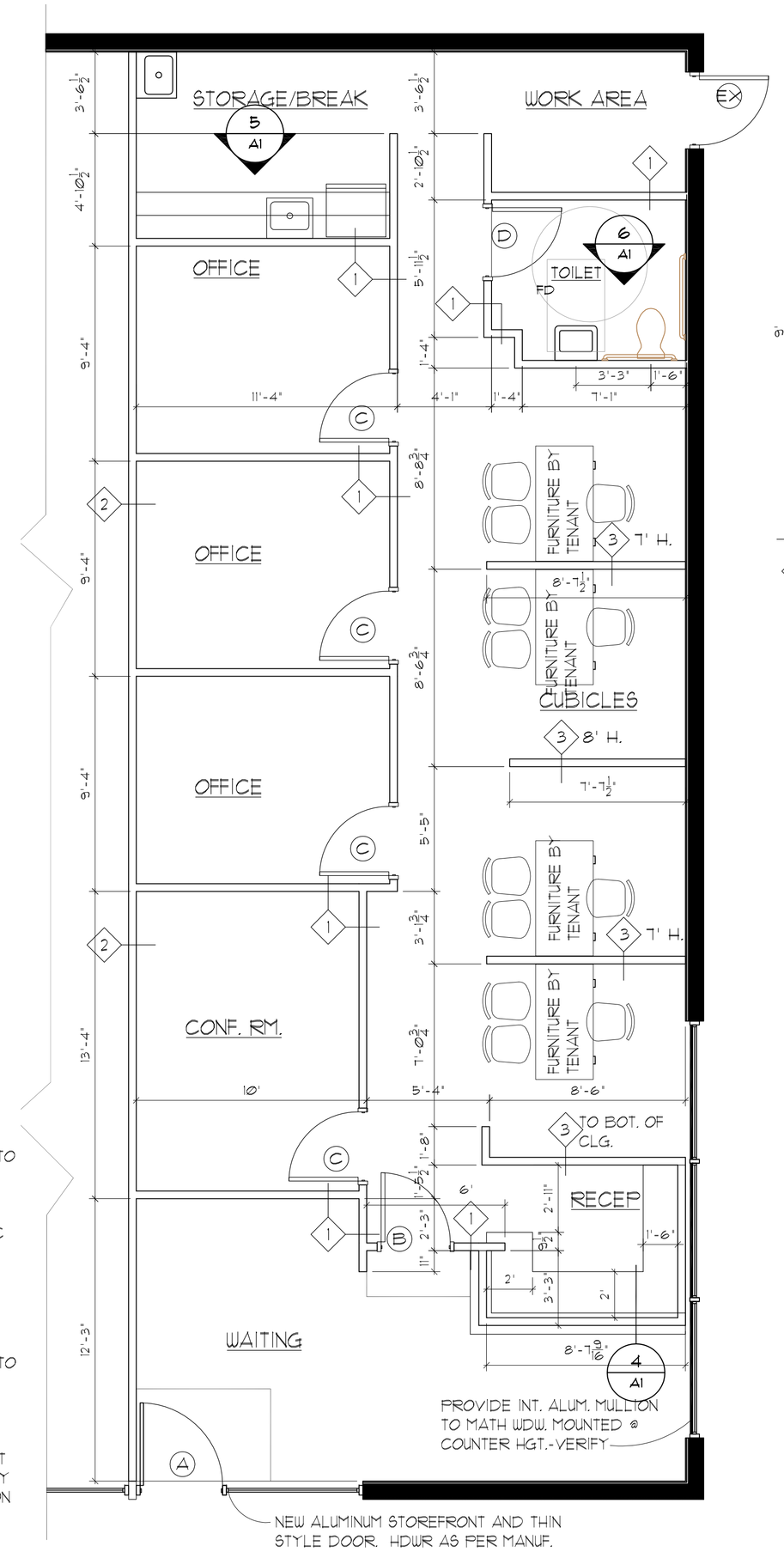

2 FLOOR PLAN

1/4" = 1'-0"

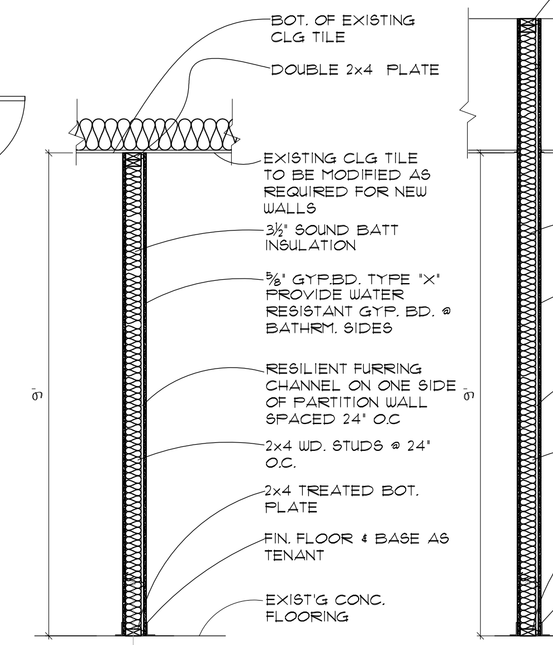

1 WALL PARTITION DETAIL

N.T.S.

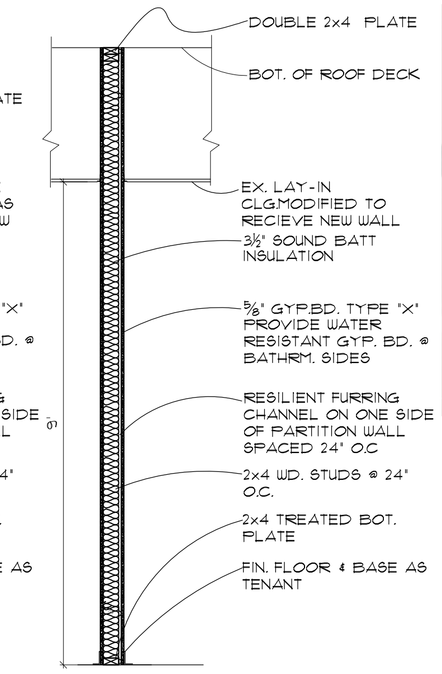

2 WALL PARTITION DETAIL

N.T.S.

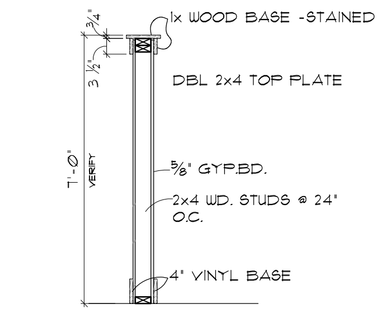

3 WALL PARTITION DETAIL

N.T.S.

3 WALL PARTITION SECTIONS

1/4" = 1'-0"

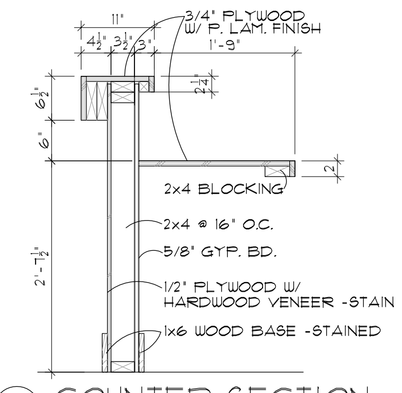

2 COUNTER SECTION

N.T.S.

4 SECTION @ COUNTER

3/4" = 1'-0"

CODE BLOCK DATA:

PROJECT: REMAX ADVANTAGE
PROJECT ADDRESS: 123 S. WASHINGTON, JUNCTION CITY, KS 66441
TYPE OF CONSTRUCTION: NEW CONSTRUCTION W/IN EXISTING SHELL
COUNTY: GEARY
CITY: JUNCTION CITY
LOCAL FIRE DEPT.: CITY OF JUNCTION
WATER SUPPLY: CITY OF JUNCTION
LOCAL BLDG INSP. DEPT.: CITY OF JUNCTION
ARCHITECT: DEAM & DEAM, 124 W 7TH ST., JUNCTION CITY, KS
CODES/REGS USED TO DESIGN:
2006 IECC, 2006 IBC, 2006 IMC, 2006 IPC
OCCUPANCY CLASSIFICATION: = B- OCCUPANCY
CONSTRUCTION BUILDING TYPE: TYPE V-B
BASIC ALLOWABLE HEIGHT: (TABLE 503)
BASIC ALLOWABLE AREA: (TABLE 503) 9,000 S.F.
ACTUAL HEIGHT AND AREA: 1 STORY, 1,477 S.F.
OCCUPANCY SEPARATIONS: NON REQUIRED
OCCUPANT LOAD: BASED ON TABLE 1004.1.1= 15 OCCUPANTS (SEE PLAN)
MEANS OF EGRESS: (CHAPTER 10)
COMMON PATH OF TRAVEL: EXCEPTION 1014.3 #2 = 100'
TRAVEL DISTANCE: (TABLE 1016.1) 200 FEET
MINIMUM CORRIDOR WIDTH: (SECTION 1017.2)
NOT LESS THAN 44 INCHES BUT DETERMINED BY SECTION 1005.1
STAIRWAYS = N/A
OTHER EGRESS COMPONENTS = 2(17) = 3.4" @ 44" THUS 44" MIN.
SPACES W. ONE MEANS OF EGRESS: TABLE 1015.1 2009 IBC N/A
PLUMBING: MINIMUM PLUMBING FIXTURES:
1 UNISEX AS PER SECTION 2902.2 EXCEPT. 2
1 DRINKING FOUNTAIN REQUIRED WATER COOLER STAND TO BE PROVIDED
1 SERVICE SINK REQUIRED & PROVIDED
ACTIVE FIRE SAFETY SYSTEM: N/A
STRUCTURAL FIRE PROTECTION: NONE
SPRINKLER: NOT REQUIRED
PASSIVE SAFETY SYSTEM: N/A

NOTE: FIRE EXTINGUISHERS TO BE PLACED IN COORDINATION WITH LOCAL FIRE DEPARTMENT OFFICIALS GUIDANCE KANSAS ADMINISTRATIVE REGULATION (K.A.R.) 22-1-7 ADOPTED JULY 9, 2004 BY THE KANSAS STATE FIRE MARSHAL- PUBLIC BUILDING OWNERS/OPERATORS OF NEW CONSTRUCTION, ADDITIONS OR CHANGE OF USE SHALL PROVIDE AND PERMANENTLY MAINTAIN A "CODE FOOTPRINT" ON SITE AVAILABLE TO FIRE AUTHORITIES.
*NOTE: ALL WALLS SHOWN ARE PERMANENT PARTITIONS OVER 6'-0" IN HEIGHT UNLESS OTHERWISE NOTED.

FINISH SCHEDULE

ROOM	FLOOR	BASE	WALLS N.	WALLS S.	WALLS E.	WALLS W.	CEILING	REMARKS
ENTRY	CARP	V	P	P	P	P	EX	
CONF.	CARP	V	P	P	P	P	EX	
OFFICES	CARP	V	P	P	P	P	EX	
OPEN OFF	CARP	V	P	P	P	P	EX	
STORAGE	C	V	P	P	P	P	EX	
TOILET	T	T	P	P	P	P	EX	

G/P GYP. BD.
C CONCRETE SEALER
P PAINT BY TENANT
V 4" VINYL BASE
T TILE BY TENANT
GENERAL NOTES:
ALL FINISHES SHALL BE VERIFIED BY TENANT PRIOR TO CONST.

DOOR SCHEDULE:

(A) 3/0x7/0 ALUMINUM STOREFRONT AS PER MANUF.
(B) 3/0x6/8x1 3/4" 6-PANEL COMPOSITE DOOR WITH OFFICE LOCKSET
(C) 3/0x6/8x1 3/4" 6-PANEL COMPOSITE DOOR WITH OFFICE LOCKSET
(C) 3/0x6/8x1 3/4" 6-PANEL COMPOSITE DOOR WITH TOILET LOCKSET
(EX) EXISTING TO REMAIN

DOOR NOTES:
• ALL INTERIOR DOOR FRAMES TO BE WOOD- PAINTED (UNLESS NOTED OTHERWISE)
• ALL DOORS TO BE 6 PANEL COMPOSITE. PAINTED (UNLESS NOTED OTHERWISE)
• PROVIDE SIGN AT TOILET PER 'ADA' REQUIREMENTS
REF. SHT. A1 FOR TYP. JAMB AND HEAD DETAIL.
LOCKSETS ARE 'AL' SERIES BY SCHLAGE ALUMINUM OR APPROVED EQUAL.

HARDWARE NOTES:
REQUIRED TO MEET ALL CODE REQUIREMENTS.
HARDWARE TO BE LEVER OPERATED TO MEET 'ADA'.

HARDWARE FUNCTIONS:
HARDWARE SUPPLIER SHALL BE RESPONSIBLE FOR FURNISHING ALL NECESSARY ITEMS TO ACHIEVE THE FUNCTION INTENDED FOR PROPER OPERATION.

DOOR SCHEDULE:

(EX) EXISTING DOOR - NO WORK
(1) 3/0x7/0x1 3/4" HOLLOW MTL DOOR AND FRAME -PAINTEDF W/ OFFICE LOCKSET
(2) 3/0x6/8x1 3/4" SOLID-CORE DOOR AND HOLLOW MTL. FRAME W/ STORAGE LOCKSET

DOOR NOTES:
• ALL DOOR FRAMES TO BE HOLLOW METAL- PAINTED (UNLESS NOTED OTHERWISE)
• ALL DOORS TO BE PAINTED (UNLESS NOTED OTHERWISE)
• LOCKSETS ARE 'D' SERIES BY SCHLAGE (ALUMINUM) OR APPROVED EQUAL.

HARDWARE NOTES:
CODE: HARDWARE SUPPLIER SHALL BE RESPONSIBLE FOR PROVIDING HARDWARE AS REQUIRED TO MEET ALL CODE REQUIREMENTS.
HARDWARE TO BE LEVER OPERATED TO MEET 'ADA'.

HARDWARE FUNCTIONS:
HARDWARE SUPPLIER SHALL BE RESPONSIBLE FOR FURNISHING ALL NECESSARY ITEMS TO ACHIEVE THE FUNCTION INTENDED FOR PROPER OPERATION.

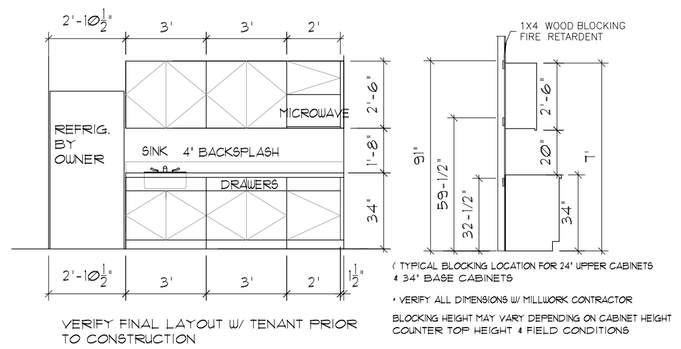

VERIFY FINAL LAYOUT W/ TENANT PRIOR TO CONSTRUCTION

(TYPICAL BLOCKING LOCATION FOR 24" UPPER CABINETS & 34" BASE CABINETS

• VERIFY ALL DIMENSIONS W MILLWORK CONTRACTOR

BLOCKING HEIGHT MAY VARY DEPENDING ON CABINET HEIGHT COUNTER TOP HEIGHT & FIELD CONDITIONS

CABINET SECTION

5 CABINET ELEVATION

1/4" = 1'-0"

RESTROOM EQUIP. SCHEDULE

KEY #	ITEM	MANUFACTURER	MODEL #
A	TOILET PAPER DISP.	PROVIDED BY OWNER	-
B	GRAB BARS	BRADLEY	812-1005-36 (42)
C	MIRROR (ref. elev.)	AMERICAN SPECIALTIES, INC.	1060-00-24" x 30"@ each sink. (and 0935-24" x 30"@ ADA sink.)
D	ADA TOILET	REF. PLUMBING	
E	SINK	REF. PLUMBING -NO BACKSPLASH	
F	SERVICE SINK	REFERENCE MECHANICAL	

GENERAL NOTES

- ALL RESTROOM EQUIPMENT SHALL BE INSTALLED PER ARCHITECTURAL BARRIER STANDARDS
- ALL RESTROOM EQUIPMENT SHALL BE MANUFACTURED OF TYPE 304 STAINLESS STEEL W/ A SATIN FINISH
- INSTALL PROTECTIVE INSUL. OVER ALL EXPOSED PLUMBING UNDER LAVATORIES
- MANUF. SHALL SUBMIT SHOP DRAWINGS TO ARCHITECT FOR APPROVAL
- SINK SHALL NOT HAVE A BACK SPLASH TO ACCOMODATE FOR GRAB BAR

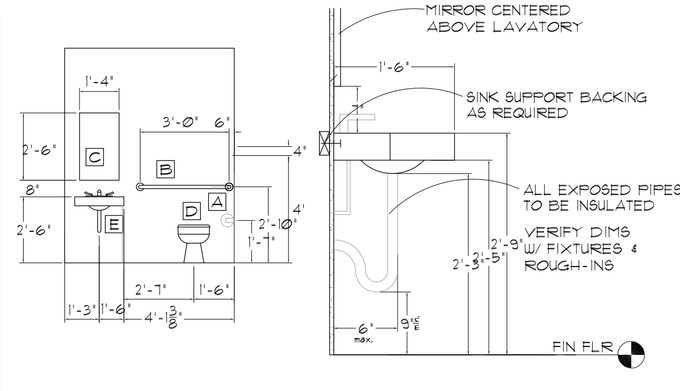

6 TOILET ELEVATION AND SECTION

NOT TO SCALE

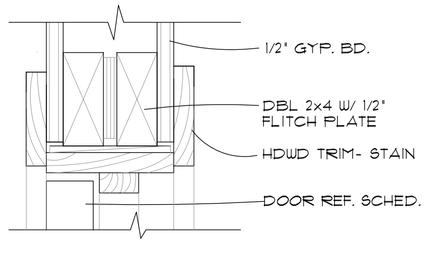

7 INT. DR. HEAD DTL.

3" = 1'-0"

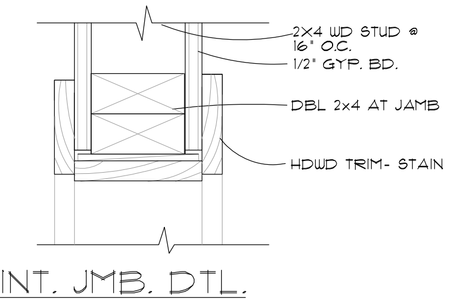

8 INT. JMB. DTL.

3" = 1'-0"

architectural design
dean & dean LLC
124 W. 7TH., JUNCTION CITY, KS. 66441, 785-238-0874

BRETT F. DEAN LICENSED 4522 KANSAS PROFESSIONAL ARCHITECT

5/1/2013

REMAX ADVANTAGE
JUNCTION CITY, KS

MAY 2013

A1/1