Sprinkler

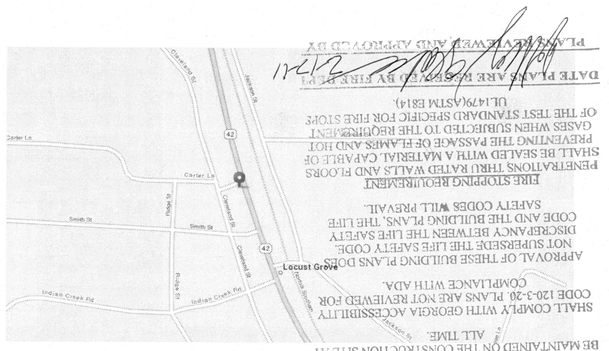

SITE MAP
NTS

SITE VIEW
NTS

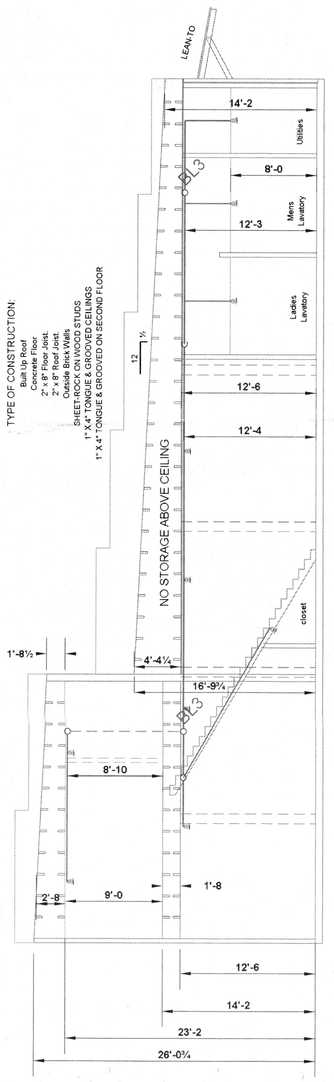

SECTIONAL
SCALE: 1/8" = 1'-0"
3 FS-1

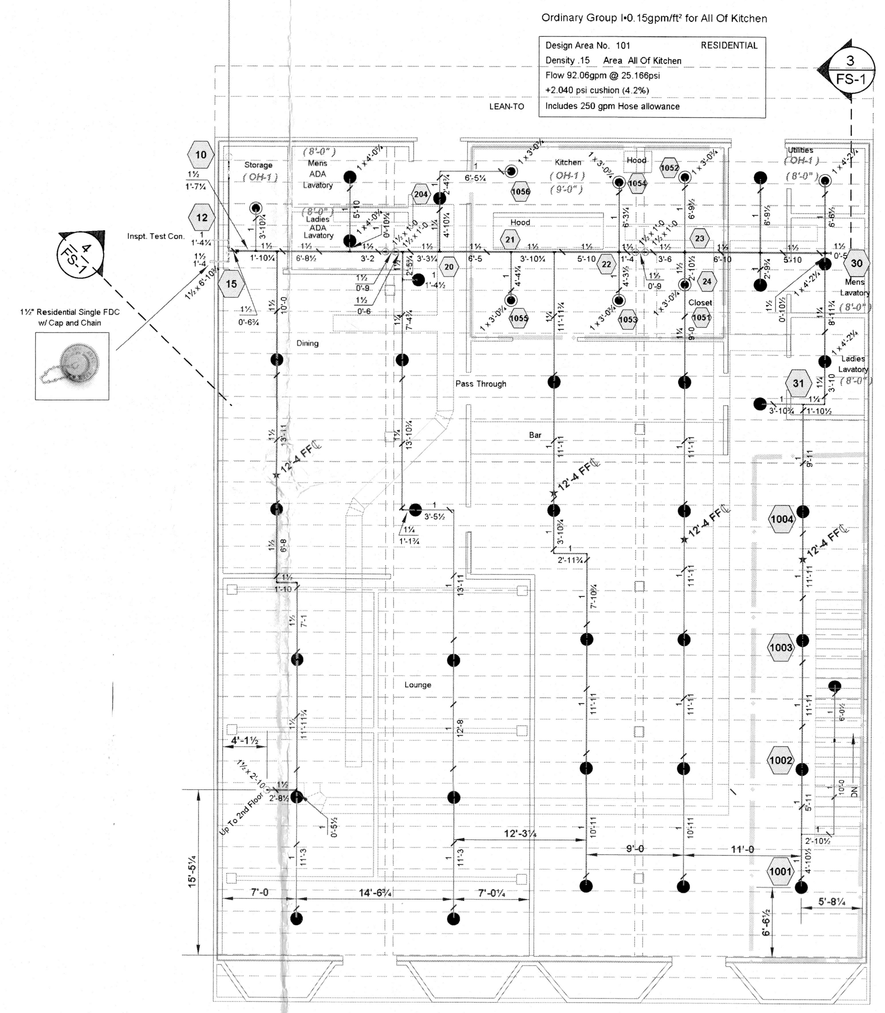

Residential<0.05gpm/ft² for 4 Heads
Design Area No. 100 RESIDENTIAL
Density .05 Area 4 Heads
Flow 55.16gpm @ 36.398psi
+5.481 psi cushion (11.2%)
Includes 100 gpm Hose allowance

1 FS-1 FIRST FLOOR PLAN - FIRE PROTECTION
SCALE: 1/8" = 1'-0" 0 2' 4' 6' 8' 16' F.F ELEVATION 0'-0"
AREA OF WORK IS APPROXIMATELY 4,479.65 sq. ft.

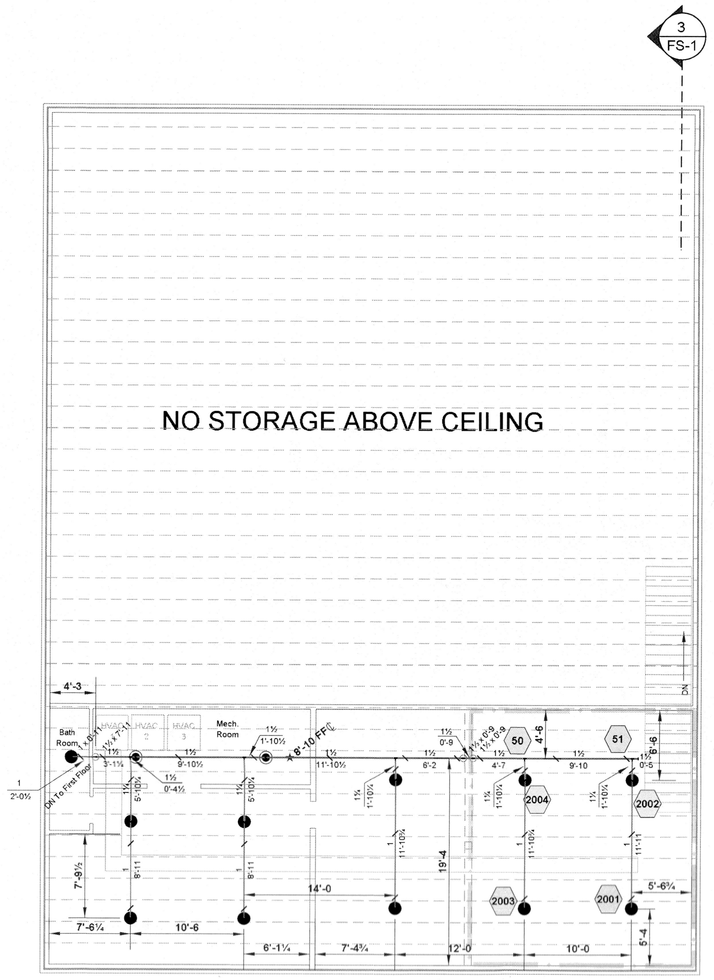

Residential<0.05gpm/ft² for 4 Heads
Design Area No. 200 RESIDENTIAL
Density .05 Area 4 Heads
Flow 52.82gpm @ 31.121psi
+11.345 psi cushion (23.2%)
Includes 100 gpm Hose allowance

2 FS-1 SECOND FLOOR PLAN - FIRE PROTECTION
SCALE: 1/8" = 1'-0" 0 2' 4' 6' 8' 16' F.F ELEVATION 14'-2"
AREA OF WORK IS APPROXIMATELY 1,431 sq. ft.

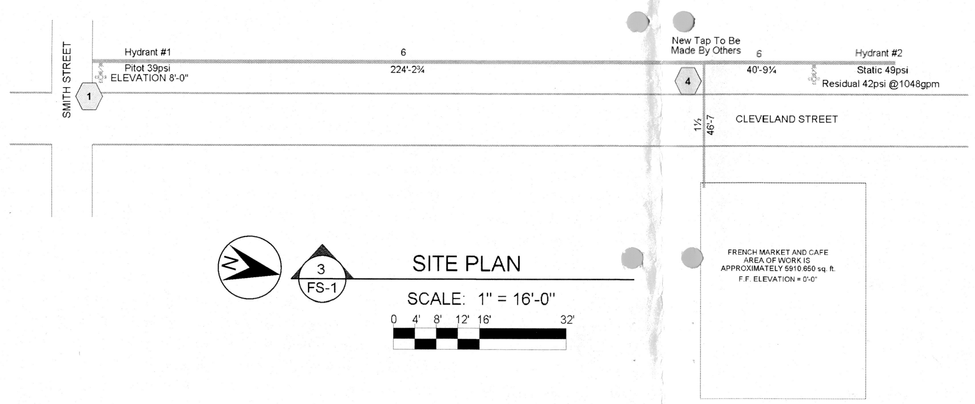

3 FS-1 SITE PLAN
SCALE: 1" = 16'-0"
0 4' 8' 12' 16' 32'

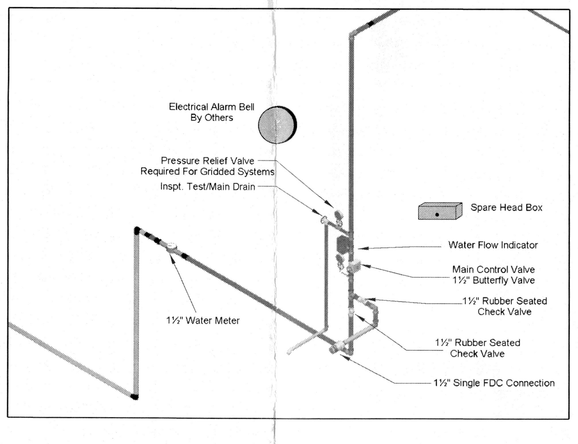

4 FS-1 RISER VIEW
SCALE: NTS

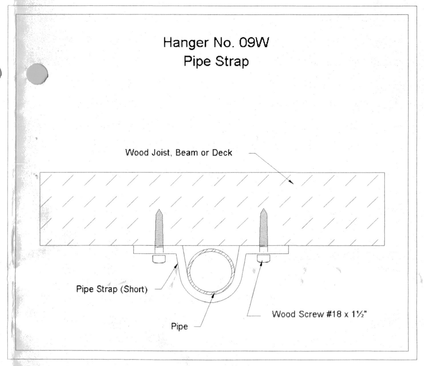

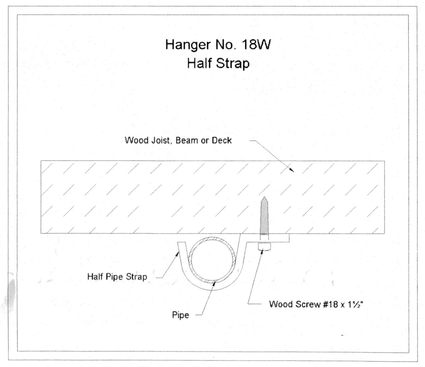

GENERAL INFORMATION:

1 MATERIALS:
- 1-1. SCHEDULE 40 PIPE MEETING ASTM A-135 OR A-795 REQUIREMENTS WITH:
  - a. MECHANICAL GROOVED PIPE COUPLINGS AND FITTINGS FOR ROLL GROOVED PIPE SIZES 2½ INCHES AND LARGER.
- 1-2. SCHEDULE 40 PIPE MEETING ASTM A-53 REQUIREMENTS WITH:
  - a. THREADED PIPE FITTINGS FOR PIPE SIZES 2 INCHES AND SMALLER
- 1-3. THREADED RODS SHALL BE GALVANIZED. ALL RODS EXSPOSED TO WEATHER SHALL BE STAINLESS STEEL.

2 HANGERS TO BE PER NFPA 13 (SEE DETAILS).
3 ALL AREAS ARE LIGHT HAZARD OR AS NOTED ON DRAWINGS.
4 CONNECTIONS PROVIDED FOR FLUSHING PER NFPA 13
5 TEST SYSTEM HYDROSTATICALLY AT 200 PSI FOR 2 HRS
6 PROVIDE CLEARENCE AT PENETRATIONS PER NFPA 13.
7 F.F. = 0'-0" – DENOTES DISTANCE FROM FINISH FLOOR TO CENTERLINE OF PIPE.
8 T.O.S. = 0'=0" – DENOTES DISTANCE FROM BOTTOM OF ROOF DECK TO CENTERLINE OF PIPE.
9 ALL LOW POINTS TO HAVE PROPER DRAINAGE.
10 UNITED FIRE EXCLUDES PAINTING AND ELECTRICAL WIRING.
11 PROVIDE SPARE SPRINKLERS AND WRENCH FOR EACH SYSTEM IN VALVE ROOM.
12 PROVIDE HYDRAULIC PLACARD ON SPRINKER RISER.
13. SPRINKLER SYSTEM IS TO BE HYDRAULICALLY CALCULATED
14. THERE ARE NO HANGING HEATERS ON THIS FLOOR.
15. THERE ARE NO ROLL BACK DOORS OR OVERHEAD DOORS.
16 THERE ARE NO SKYLIGHTS, DOMES, OR UNUSUAL CEILINGS.
17 SURVEY DONE BY ANDREW PIERRE
18 — · — · — · — · — INDICATES 1HR FIRE WALL
19 — · · — · · — · · — INDICATES 2HR FIRE WALL
20 — · · · — · · · — · · · INDICATES 3HR FIRE WALL

COC# CC000689
Andrew Pierre
Andrew Pierre
Nicet ID# 81798

System Designed Per NFPA-13R
4 Heads Calculated At The Most Remote Area.

VK468 @ 12'-0" x 12'-0" Spacing Requires 13 gpm minimum.
VK468 @ 14'-0" x 14'-0" Spacing Requires 13 gpm minimum.
VK468 @ 16'-0" x 16'-0" Spacing Requires 13 gpm minimum.
VK468 @ 18'-0" x 18'-0" Spacing Requires 17 gpm minimum.
VK468 @ 20'-0" x 20'-0" Spacing Requires 20 gpm minimum.

MAXIMUM DISTANCE BETWEEN HANGERS (ft-in.)

Nominal Pipe Size (in.)	3/4"	1"	1 1/4"	1 1/2"	2"	2 1/2"	3"	3 1/2"	4"	5"	6"	8"
Steel Pipe Except Threaded Lightwall	N/A	12-0	12-0	15-0	15-0	15-0	15-0	15-0	15-0	15-0	15-0	15-0
Threaded Lightwall Steel Pipe	N/A	12-0	12-0	12-0	12-0	12-0	12-0	N/A	N/A	N/A	N/A	N/A
Copper Tube	8-0	8-0	10-0	10-0	12-0	12-0	12-0	15-0	15-0	15-0	15-0	15-0
CPVC	5-8	6-0	6-8	7-0	8-0	9-0	10-0	N/A	N/A	N/A	N/A	N/A
Polybutylene (IPS)	N/A	3-9	4-7	5-0	5-11	N/A	N/A	N/A	N/A	N/A	N/A	N/A
Polybutylene (CTS)	2-11	3-4	3-11	4-5	5-5	N/A	N/A	N/A	N/A	N/A	N/A	N/A
Ductile Iron Pipe	N/A	N/A	N/A	N/A	N/A	N/A	15-0	N/A	15-0	N/A	15-0	15-0

GEORGIA
CC 000689
ANDREW PIERRE
CERTIFICATE OF COMPETENCY
FIRE PROTECTION CONTRACTOR
Andrew Pierre

COMPASS

GENERAL NOTES

1. ALL AREAS ARE CLASSIFIED AS LIGHT HAZARD "UNO" (OH-1)
2. HANGERS TO BE PER NFPA 13 (SEE DETAILS).
3. HEAD SPACING SHALL NOT EXCEED 130 SQ.FT. IN GROUP I HAZARD AREAS AND 225 SQ.FT. IN LIGHT HAZARD AREAS.
4. MATERIALS
- 4-1. SCHEDULE 10 PIPE MEETING ASTM A-135 OR A-795 REQUIREMENTS WITH:
  - a. MECHANICAL GROOVED PIPE COUPLINGS AND FITTINGS FOR ROLL GROOVED PIPE SIZES 2½ INCHES AND LARGER.
- 4-2. SCHEDULE 40 PIPE MEETING ASTM A-53 REQUIREMENTS WITH:
  - a. THREADED PIPE FITTINGS FOR PIPE SIZES 2 INCHES AND SMALLER
- 4-3. SCHEDULE 40 PVC BLAZEMASTER ASTM A-53 REQUIREMENTS WITH:
  - a. GLUED PIPE FITTINGS FOR PIPE SIZES 2 INCHES AND SMALLER

GENERAL SYMBOLS

SYMBOL	DESCRIPTION
	Approximate Hanger Location
★-14'-1 FF	Elevation from Floor to Centerline of Pipe
÷ 0'-0"	Elevation down from Deck to Centerline of Pipe
#1(0-0)	Cut Dimension of Pipe
	Hanger No. & Rod Length
(1)	Hydraulic Reference Point
(8-0)	Ceiling Heights AFF

REVISIONS

2 1 0 4 8
SCALE 1/8"=1'-0"

SPRINKLER SYMBOL DESCRIPTION

SYMBOL	NPT	MFR	MODEL	S.I.N.	FINISH	STYLE	ESCUTCHEON	TEMP	K-FACTOR	TOTAL
◉	1/2"	VIKING	M-QR	VK303	WHITE	PENDENT	E-1 REC	155°	5.6	11
●	1/2"	VIKING	Freedom	VK468	WHITE	PENDENT	E-1 REC	155°	4.9	45
TOTAL SPRINKLERS TO INSTALL ON THIS SHEET										56
TOTAL SPRINKLERS REQUIRED ON THIS CONTRACT										56

REVISION #	DATE	DESCRIPTION
.	.	.

PROJECT
THE FRENCH MARKET
3840 HIGHWAY 42
LOCUST GROVE, GEORGIA 30248-3633
FIRST AND SECOND FLOOR

G.C.: OWNER RICK WEAVER Phone: (404) 353-4318

SCALE	DRAWN BY	AHJ:	
AS SHOWN	AP	HENRY COUNTY	
ISSUE DATE 02/07/11		Job No. 11-1212AT-SPR	DRAWING NO. FS - 1 OF 1

ATLANTA
FT. LAUDERDALE
UNITED FIRE
Tampa · Orlando · Ft. Lauderdale · Atlanta
(888) 532-6344
FIRE SAFETY SYSTEMS
TAMPA HEADQUARTERS
FLORIDA
GEORGIA

INSTALLATION NOTES:

THIS DRAWING IS TO PROVIDE THE SYSTEM INSTALLER WITH THE NECESSARY INFORMATION AS HOW TO WIRE FIELD DEVICES. ACTUAL CIRCUIT ROUTING, CIRCUIT DIVISION, AND TIE-D DEVICE LOCATIONS SHALL BE DETERMINED BY THE SYSTEM INSTALLER IN THE FIELD.

CODE SUMMARY:

THE SYSTEM DESIGN IS ACCORDANCE WITH NFPA 72, 2007 EDITION.

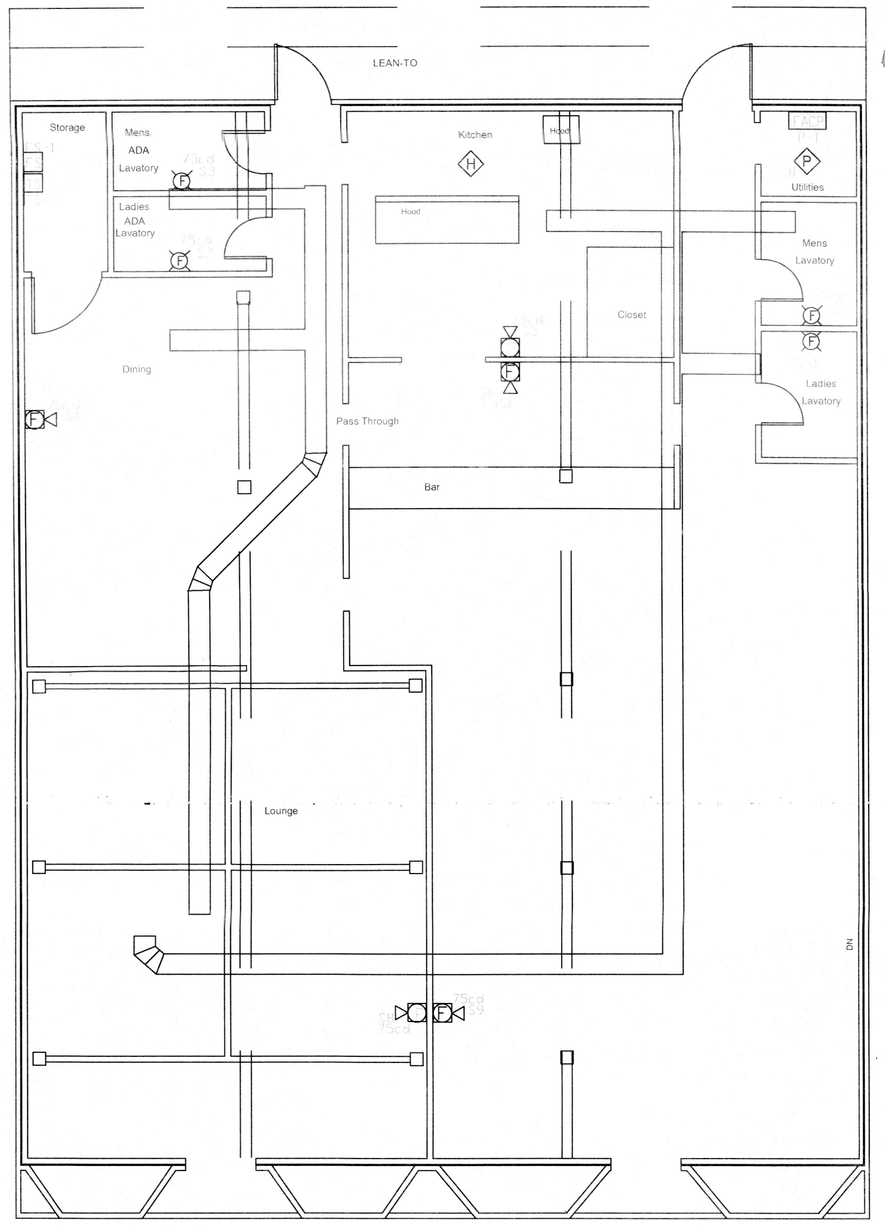

FIRST FLOOR PLAN

SCALE: 1/8" = 1'-0"

HENRY COUNTY FIRE DEPARTMENT
FIRE PREVENTION - APPROVED PLANS
NOTICE

A COMPLETE SET OF FIRE DEPARTMENT APPROVED PLANS AND SPECIFICATIONS SHALL BE MAINTAINED ON THE CONSTRUCTION SITE AT ALL TIMES.

SHALL COMPLY WITH GEORGIA ACCESSIBILITY CODE (120-3-20) PLANS REVIEW FOR COMPLIANCE WITH ADA.

APPROVAL OF THESE BUILDING PLANS DOES NOT SUPERSEDE THE LIFE SAFETY CODE INSPECTOR'S RIGHT TO ENTER THE LIFE SAFETY OCCUPANCY BEFORE THE BUILDING PLANS ARE IN CODE AND THE BUILDING CODES WILL PREVAIL.

SAFETY CODES REQUIREMENT

FIRE STOPPING MATERIALS AND FLOORS PENETRATED WALLS MUST BE FIRE RATED WITH A MATERIAL CAPABLE OF SHALL BE SEALED WITH FIRE STOPPING MATERIALS AND PREVENTING THE PASSAGE OF FLAMES AND HOT GASES WHEN SUBJECTED TO THE REQUIRED OF THE TEST STANDARD ASTM E814, UL 1479 OR UL 1479/ASTM E814.

DATE: 4-8-11 BY: [illegible]
PLAN REVIEWED AND APPROVED BY

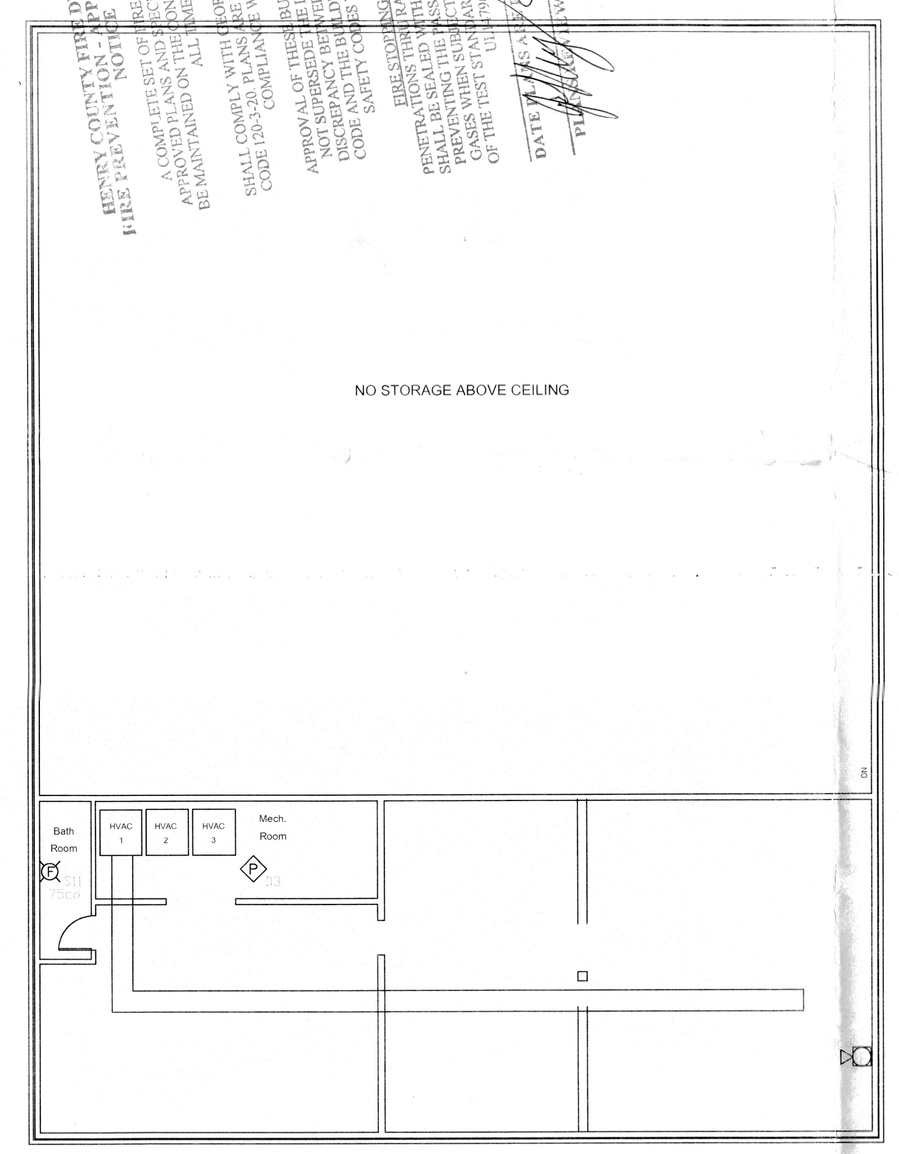

SECOND FLOOR PLAN

SCALE: 1/8" = 1'-0"

INPUT/OUTPUT MATRIX

SYSTEM INPUTS				
		●	●	●	●
		●	●	●	●
				●	●

SYSTEM OUTPUTS

HEIGHT REQUIREMENTS FOR WALL-MOUNTED DEVICES

1. EACH MANUAL FIRE ALARM BOX SHALL BE SECURELY MOUNTED. THE OPERABLE PART FOR EACH MANUAL FIRE ALARM BOX SHALL NOT BE MORE THAN 48" (1.37 M) ABOVE FLOOR LEVEL.
2. WHERE CEILING HEIGHTS ALLOW, WALL-MOUNTED APPLIANCES SHALL HAVE THEIR BOTTOMS AT 80" A.F.F.
3. WALL-MOUNTED VISUAL APPLIANCES SHALL BE MOUNTED 80 IN.(2M) MINIMUM OR NO HIGHER THAN 96" FROM THE BOTTOM OF THE DEVICE TO THE FINISHED FLOOR.
4. WHERE COMBINATION AUDIBLE/VISIBLE APPLIANCES ARE INSTALLED, THE LOCATION OF THE INSTALLED APPLIANCE SHALL BE DETERMINED BY VISIBLE APPLIANCES.
5. SYNCHRONIZE VISUAL APPLIANCES IF LOCATED WITHIN FIELD VIEW.

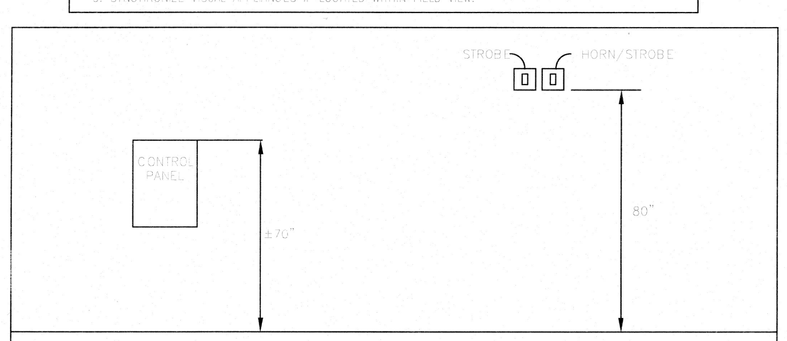

HEIGHT OF DEVICES DETAIL (FIRE ALARM)

N.T.S.

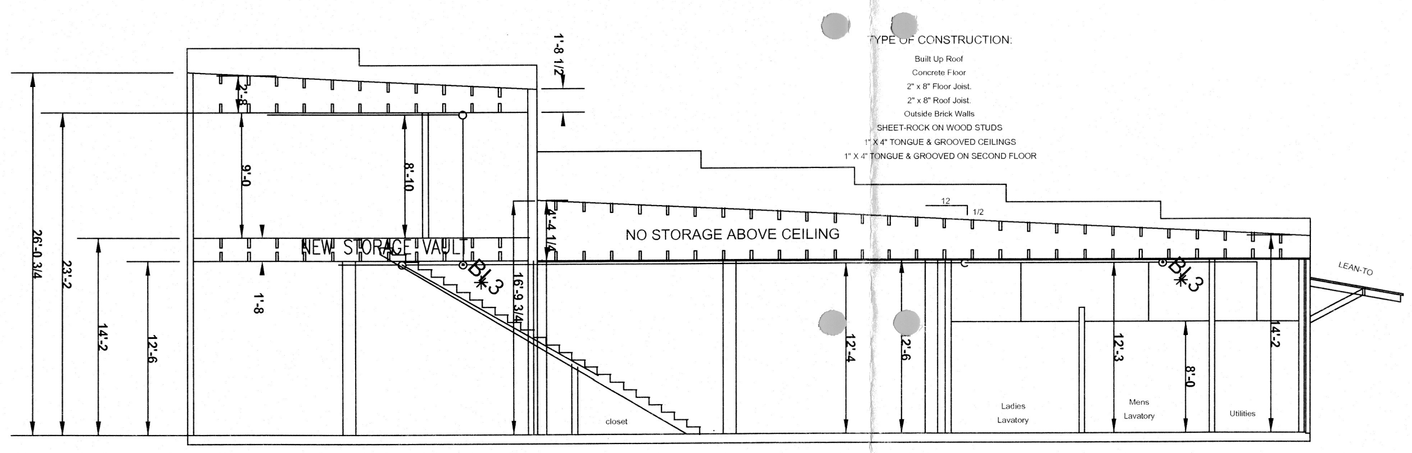

CROSS SECTION

SCALE: 1/8" = 1'-0"

EQUIPMENT SCHEDULE AND LEGEND

SYMBOL	QTY.	PART NUMBER	DESCRIPTION	MANUFACTURER
FACP	1	SFP-10UD	NOTIFIER CONTROL PANEL	NOTIFIER
	2	BAT1275	12V DC BATTERY	NOTIFIER
P	2	2151	PHOTOELECTRIC DETECTOR	NOTIFIER
	2	B501BP	DETECTOR BASE	NOTIFIER
H	1	5451	HEAT DETECTOR	NOTIFIER
	1	B401B	DETECTOR BASE	NOTIFIER
F	6	P2R	HORN/STROBE (75cd)	NOTIFIER
F	5	SR	STROBE(75cd)	NOTIFIER
	1	-	TAMPER SWITCH	BY OTHERS
	1	-	FLOW SWITCH	BY OTHERS

REVISION #	DATE	DESCRIPTION

THE FRENCH MARKET
3840 Highway 42
Locust Grove, GA 30248

FIRE ALARM PLAN

SCALE	DRAWN BY	DESIGNED BY
AS SHOWN	J. PIERCE	J. NORRIS
ISSUE DATE	JOB NUMBER	DRAWING NUMBER
03/22/11	11-1212AT	FS - 1 OF 2

ATLANTA
5910 SHILOH ROAD EAST, SUITE 105
ALPHARETTA, GA 30005

FT. LAUDERDALE
4747 N. NOB HILL ROAD, SUITE 15
SUNRISE, FL 3335

UNITED FIRE
Tampa · Orlando · Ft. Lauderdale · Atlanta
(888) 922-5544
PROVIDING WORLD CLASS SERVICE

TAMPA/HEADQUARTERS
12001 51st COURT N.
ST. PETERSBURG, FL 33716

900688000/2000	90238
EF0001185	LVA205328

ORLANDO
369 ANCHOR ROAD, SUITE 1217
CASSELBERRY, FL 32707

CONDUCTOR & RACEWAY SCHEDULE

[illegible]

[illegible]

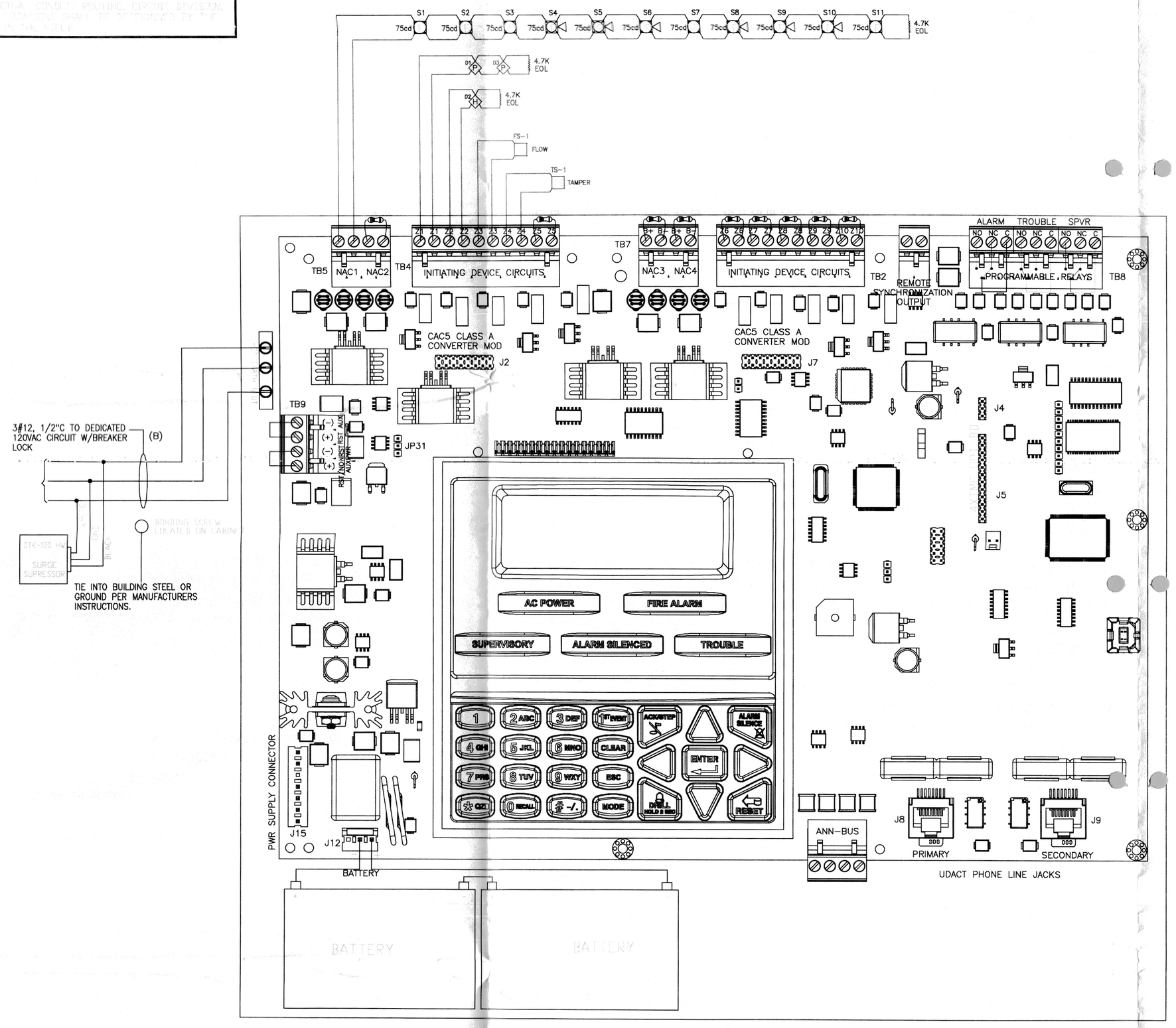

NOTIFIER SFP-10UD PANEL (P-1)

N.T.S.

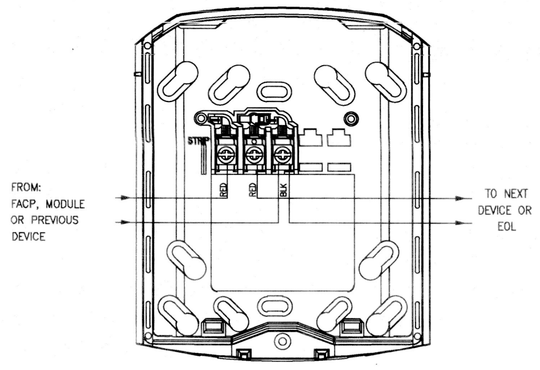

HORN/STROBE WIRING DIAGRAM

N.T.S.

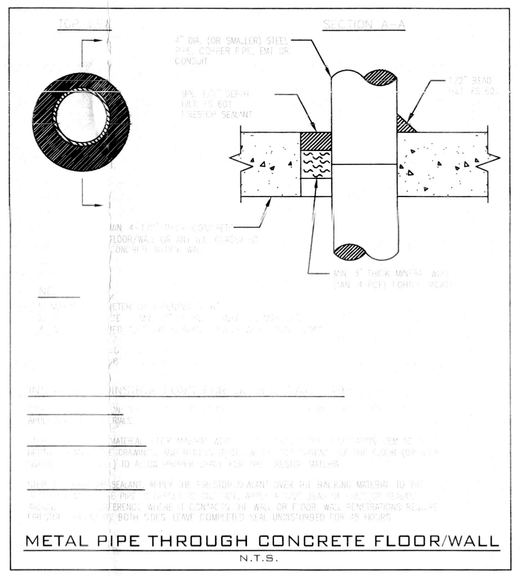

METAL PIPE THROUGH CONCRETE FLOOR/WALL

N.T.S.

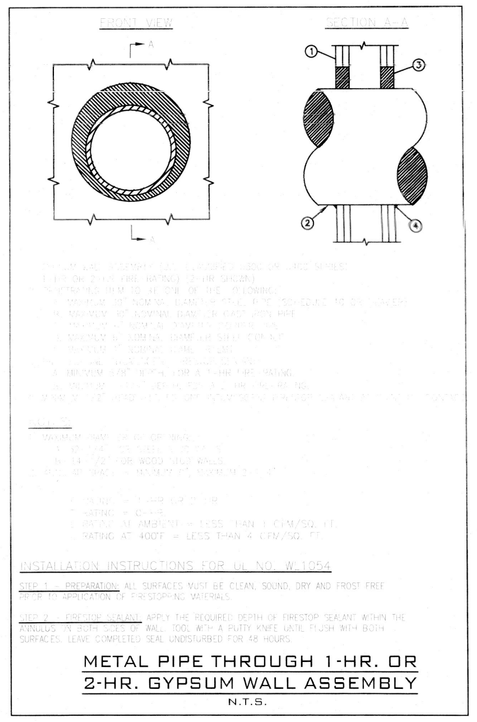

METAL PIPE THROUGH 1-HR. OR 2-HR. GYPSUM WALL ASSEMBLY

N.T.S.

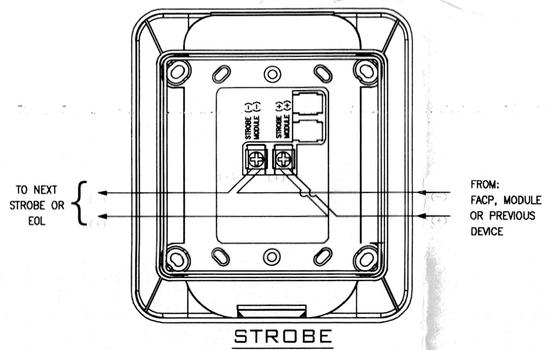

STROBE WIRING DIAGRAM

N.T.S.

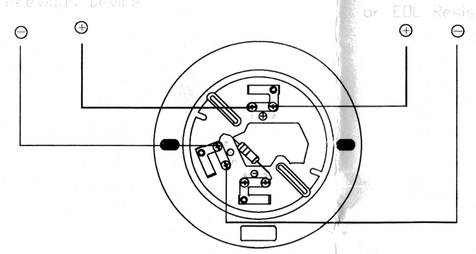

DETECTOR BASE

SFP-10UD(P-1) BATTERY CALCULATIONS

DEVICE		STAND-BY		
		DEVICE QUANTITY	DRAW (AMPS)	TOTAL DRAW (AMPS)
MAIN BOARD		1	.080	.080
IDC CIRCUITS		4	.00000	.00000
PHOTO DETECTOR W/BASE		2	.00021	.00042
HEAT DETECTOR W/BASE		1	.00010	.00010
3/22/11		TOTAL DRAW (AMPS) IN STAND-BY		.08052
	x	HOURS IN STAND-BY		24
	=	AMPS/HOURS REQUIRED		1.93
DEVICE		ALARM		
		DEVICE QUANTITY	DRAW (AMPS)	TOTAL DRAW (AMPS)
MAIN BOARD		1	.225	.225
IDC CIRCUITS		4	.04000	.16000
PHOTO DETECTOR W/BASE		2	.00021	.00042
HEAT DETECTOR W/BASE		1	.00010	.00010
OUTPUT CIRCUIT PWR CALC.		TOTAL DRAW (AMPS)		1.846
3/22/11		TOTAL DRAW (AMPS) IN ALARM		2.23
	x	5 MIN. ALARM (.084)		.084
	=	REQUIRED (AMPS) FOR ALARM		.187
	+	STAND-BY		1.93
	=	COMBINED AMP/HOURS		2.12
	x	DERATING FACTOR		1.2
	=	TOTAL AMP/HOURS REQUIRED		2.54

TWO 7-AH BATTERIES SUPPLIED

P-1 NOTIFICATION APPLIANCE POWER CALCULATIONS

DEVICE	OUTPUT #1			OUTPUT #2			OUTPUT #3			OUTPUT #4		
	DEVICE QUANTITY	DRAW (AMPS)	TOTAL DRAW (AMPS)	DEVICE COUNT	DRAW (AMPS)	TOTAL DRAW (AMPS)	DEVICE COUNT	DRAW (AMPS)	TOTAL DRAW (AMPS)	DEVICE COUNT	DRAW (AMPS)	TOTAL DRAW (AMPS)
STROBE (75cd)	5	.158	.790	–	.158	–	–	–	–	–	–	–
HORN/STROBE (75cd)	6	.176	1.056	–	.176	–	–	.176	–	–	–	–
03/22/11	TOTAL DRAW (AMPS) FOR CIRCUIT #1		1.846	TOTAL DRAW (AMPS) FOR CIRCUIT #2		–	TOTAL DRAW (AMPS) FOR CIRCUIT #3		–	TOTAL DRAW (AMPS) FOR CIRCUIT #4		–
										TOTAL DRAW (AMPS) FOR ALL CIRCUITS		2.784

NOTE: MAXIMUM CURRENT PER OUTPUT IS 3 AMP.
MAXIMUM CURRENT FOR ALL OUTPUTS (TOTAL) IS 6 AMP.

COLOR CODE

CONVENTIONAL SYSTEMS
DET A=RED(+) & WHITE(–)
DET B=ORANGE(+) & GREY(–)
PULLSTATION=PURPLE (+) & YELLOW(–)
ABORT=BLUE(+) & GREEN(–)
TANK CKT=PINK(+) & BROWN(–)

AUDIBLES ALL SYSTEMS
BELLS=RED(+) & BLACK(–)
HORN/STROBES=WHITE(+) & BLUE(–)
DISCHARGE STROBES=PINK(+) & GREEN(–)

ADDRESSABLE SYSTEMS
COMMUNCATION=18/2 TWISTED SHIELDED
24VDC POWER=ORANGE(+) & GRAY(–)

AUXILLARY FUNCTIONS
PINK
PURPLE
YELLOW
GREEN

GENERAL ELECTRICAL NOTES

1. CONDUCTOR TYPE:
   - CONVENTIONAL CIRCUITS: THHN – STRANDED.
   - INTELLIGENT CIRCUITS: TWISTED SHIELDED
2. CONDUCTOR SIZE:
   - CONVENTIONAL CIRCUITS: #14 MINIMUM.
   - INTELLIGENT CIRCUITS: #18 MINIMUM.
3. RACEWAY AND SIZES: EMT, 1/2" MINIMUM.
4. IDENTIFICATION OF EQUIPMENT AND CATALOG NUMBERS OF ALL SYSTEM COMPONENTS: SEE SHEET BILL OF MATERIALS.
5. ALL COMPONENTS SHALL REFLECT U.L. LISTING FOR FIRE SERVICE AND SHALL BE COMPATIBLE. SEE ATTACHED SUBMITTAL DATA.
6. POWER LIMITED – 24 VDC.
7. ALL SIGNAL, 24V CIRCUITS, AND WIRING CIRCUITS SHALL BE WIRED USING #14 THHN STRANDED (19 STRAND).
8. 1/2" MINIMUM CONDUIT OR 3/8" MC FOR RACEWAYS.
9. SYSTEM SHALL CONFORM TO ALL REQUIREMENTS OF NFPA 72, NEC CHAPTER 7 ARTICLE 760, CHAPTER 9 TABLE 3B, STANDARD BUILDING CODE, UNIFORM RULE 4A-4B AND RULES AND REGULATIONS OF THE STATE FIRE MARSHALS OFFICE, F.S. 633.01 AND 633.701, AND ALL STATE AND LOCAL CODES.

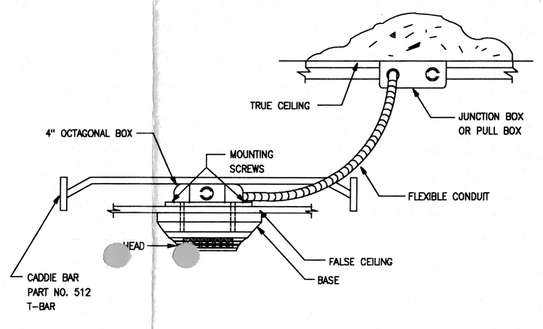

FALSE CEILING DETECTOR MOUNTING DETAIL

N.T.S.

REVISION #	DATE	DESCRIPTION

THE FRENCH MARKET
3840 Highway 42
Locust Grove, GA 30248

SFP-10UD (P-I) RISER DIAGRAM

SCALE	DRAWN BY	DESIGNED BY
AS SHOWN	D PIERCE	C NORRIS
ISSUE DATE	JOB NUMBER	DRAWING NUMBER
03/22/11	11-1212AT	FS - 1 OF 2

ATLANTA
5910 Shiloh Road East, Suite 105
Alpharetta, GA 30005

FT. LAUDERDALE
4747 N. Nob Hill Road, Suite 15
Sunrise, FL 3335

UNITED FIRE
Tampa · Orlando · Ft. Lauderdale · Atlanta
(888) 922-5544
PROVIDING WORLD CLASS SERVICE

TAMPA/HEADQUARTERS
12001 31st Court N.
St. Petersburg, FL 33716

FLORIDA
9006880001Z000
EF00011B5

GEORGIA
9023B
LVAZ05328

ORLANDO
369 Anchor Road, Suite 1217
Casselberry, FL 32707

U:\JOBS\THE FRENCH MARKET\THE FRENCH MARKET-NOTIFIER SFP-10UD - SHT.2.DWG

The French Market & Cafe'
3840 Hwy 42 Locust Grove GA.

Master Retail and Cafe' Layout

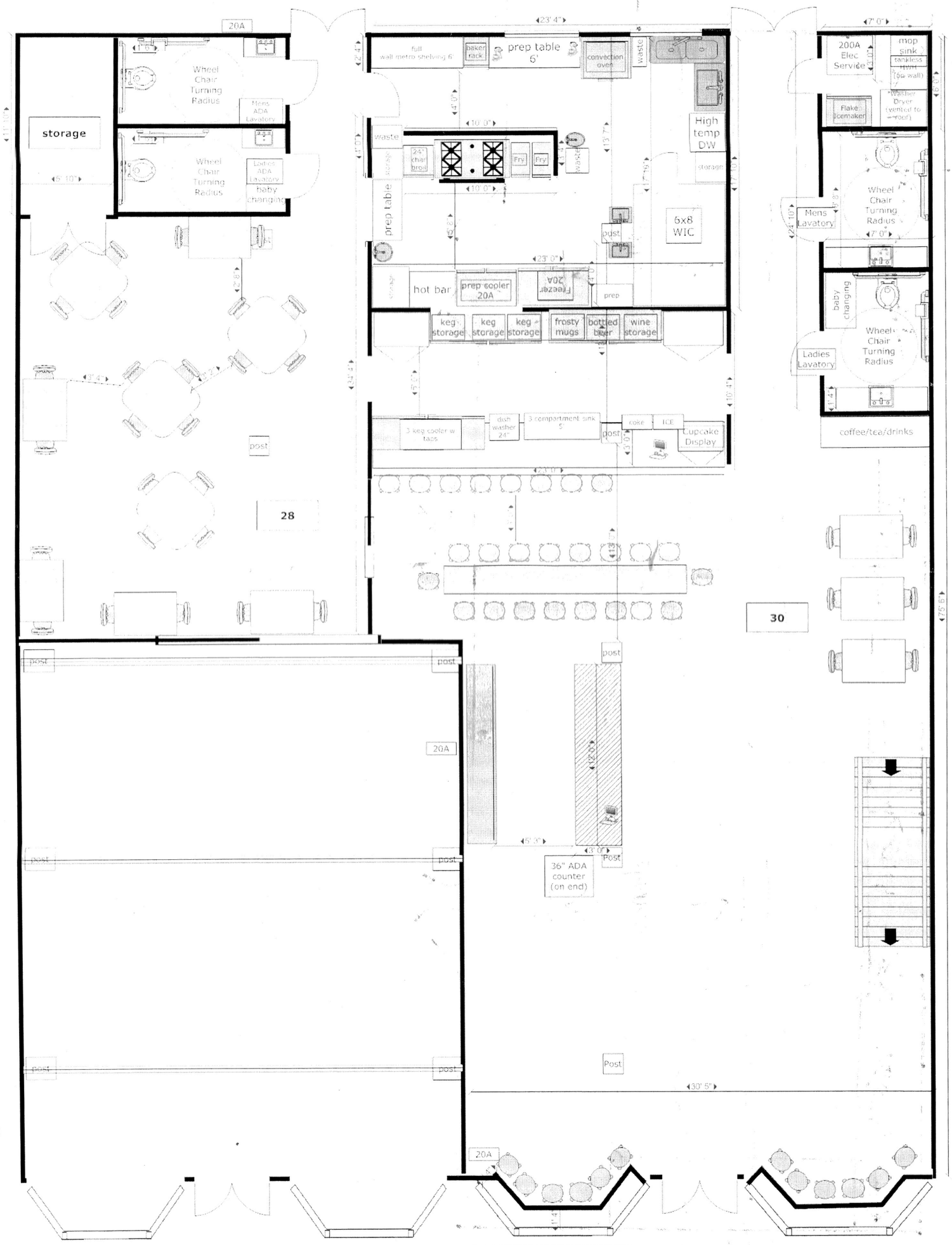

Front of Bldg - Hwy 42

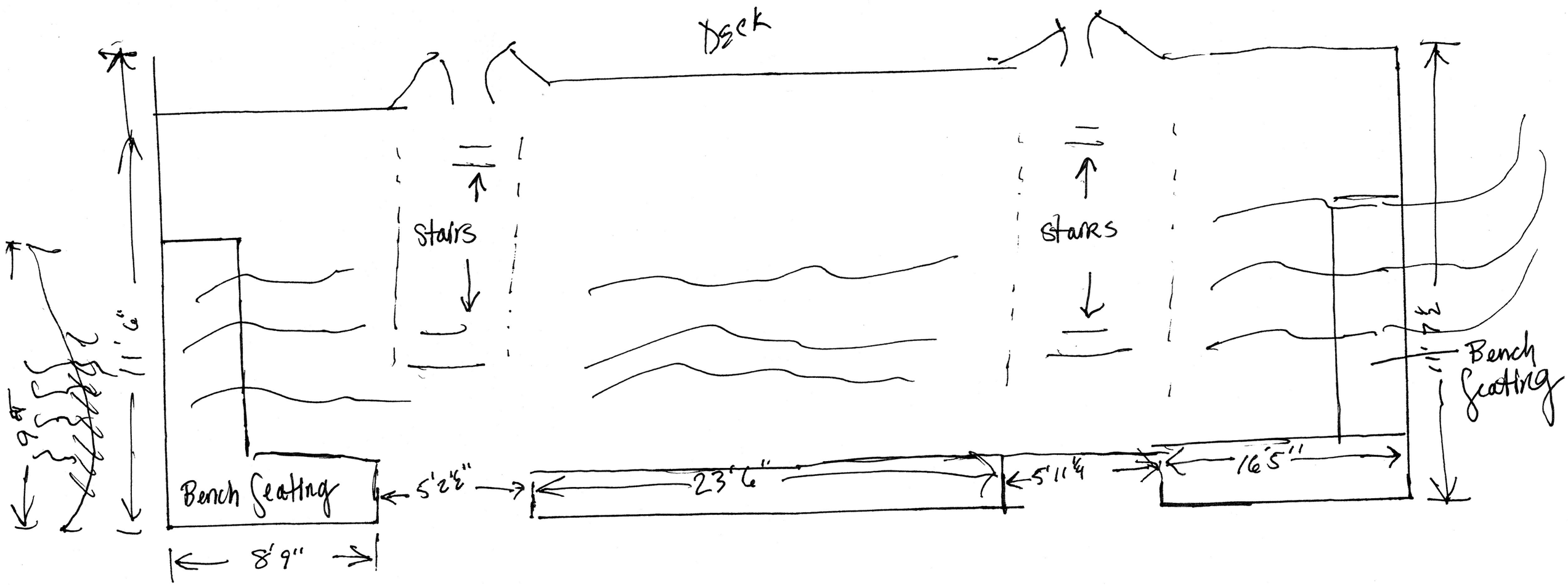
Deck
Stairs
Stairs
Bench Seating
Bench Seating
5'2½"
23'6"
5'11¼
16'5"
8'9"
11'6"
9'4"

The French Market & Cafe'
3840 Hwy 42 Locust Grove GA.

Master Retail and Cafe' Layout

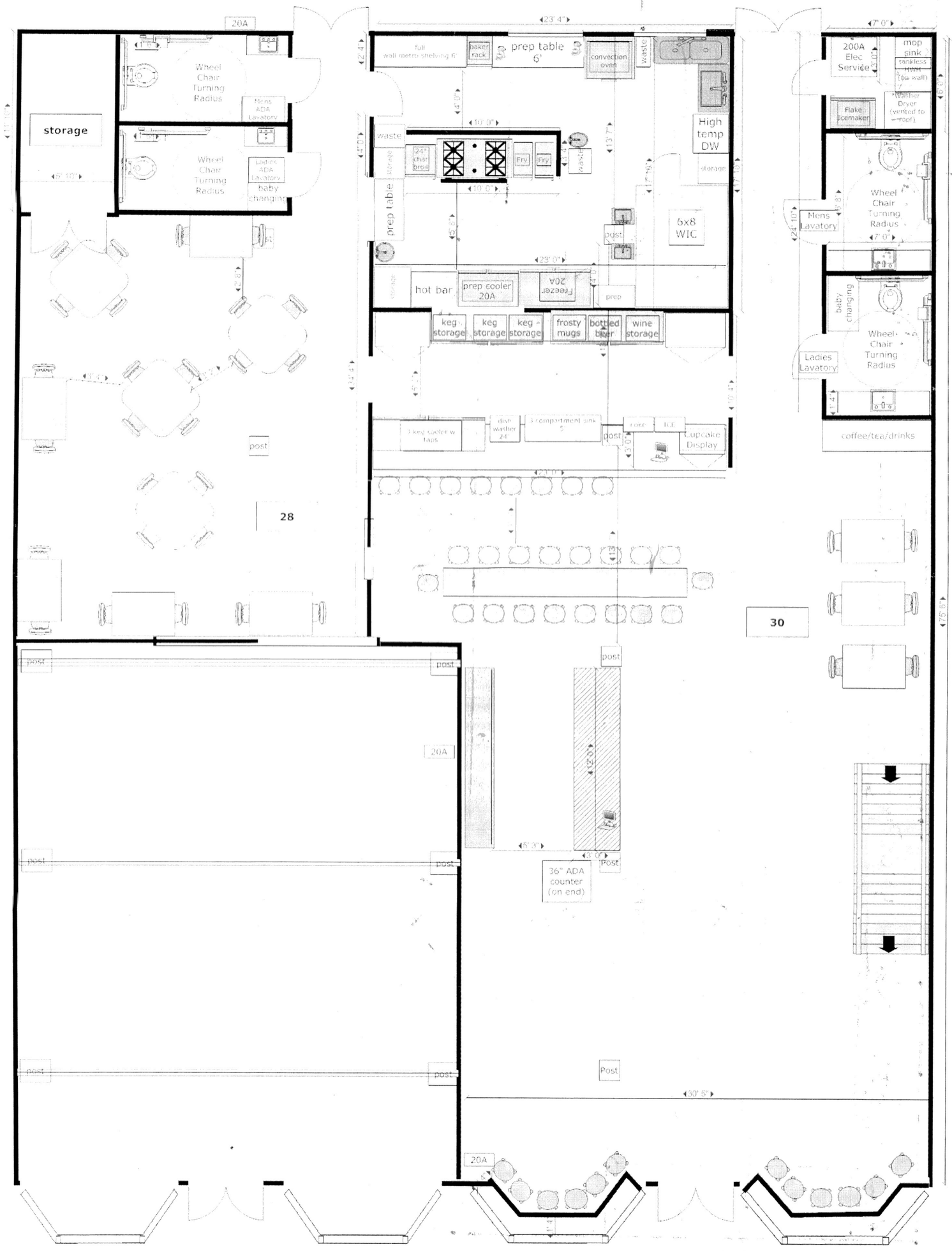

The French Market
3840 Hwy 42 Locust Grove GA

Fire Safety & HVAC Master Plan - Main Floor

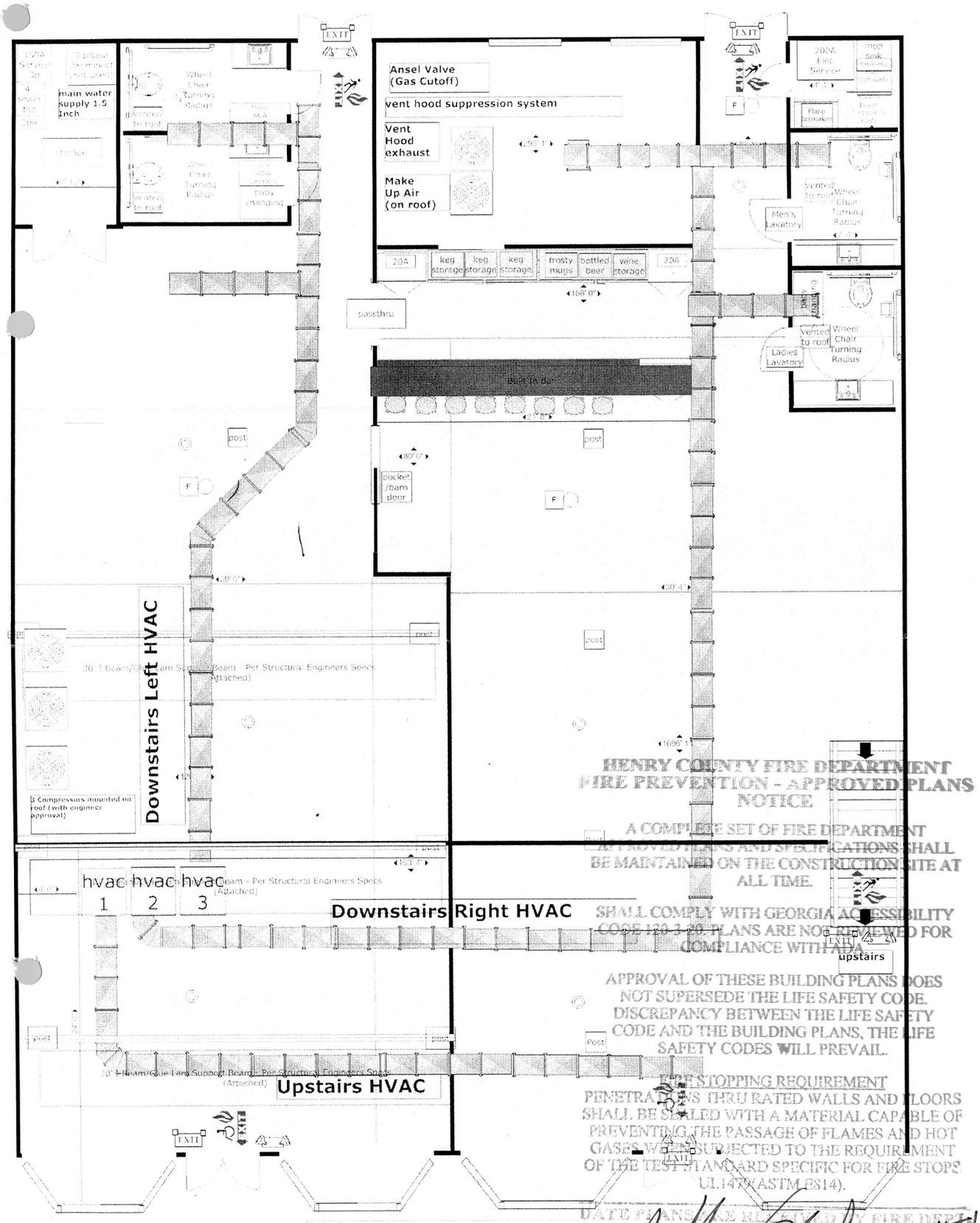

HENRY COUNTY FIRE DEPARTMENT
FIRE PREVENTION - APPROVED PLANS
NOTICE

A COMPLETE SET OF FIRE DEPARTMENT APPROVED PLANS AND SPECIFICATIONS SHALL BE MAINTAINED ON THE CONSTRUCTION SITE AT ALL TIME.

SHALL COMPLY WITH GEORGIA ACCESSIBILITY CODE 120-3-20. PLANS ARE NOT REVIEWED FOR COMPLIANCE WITH ADA.

APPROVAL OF THESE BUILDING PLANS DOES NOT SUPERSEDE THE LIFE SAFETY CODE. DISCREPANCY BETWEEN THE LIFE SAFETY CODE AND THE BUILDING PLANS, THE LIFE SAFETY CODES WILL PREVAIL.

FIRE STOPPING REQUIREMENT
PENETRATIONS THRU RATED WALLS AND FLOORS SHALL BE SEALED WITH A MATERIAL CAPABLE OF PREVENTING THE PASSAGE OF FLAMES AND HOT GASES WHEN SUBJECTED TO THE REQUIREMENT OF THE TEST STANDARD SPECIFIC FOR FIRE STOPS UL1479(ASTM E814).

DATE PLANS WERE REVIEWED BY FIRE DEPT: 11
APPROVED BY

HVAC 1 - Upper Floor - 3 ton	Note - Entire Building has R13 Sprinkler system (Including HVAC Mechanical Closet)
HVAC 2 - Lower Left (1800 sf)(Banquet) - 4 ton gas unit	Note - All 3 Condenser units will be located on roof (area will be reinforced to hold load per engineer specifications)
HVAC 3 - Lower Right (2320 sf) (Retail/Cafe) 4 ton gas unit	R13 Sprinkler; F Audible Strobe

on all toilets

grab bars 42" & 36"

The French Market
3840 Hwy 42 Locust Grove GA

Electrical and Plumbing Master Plan

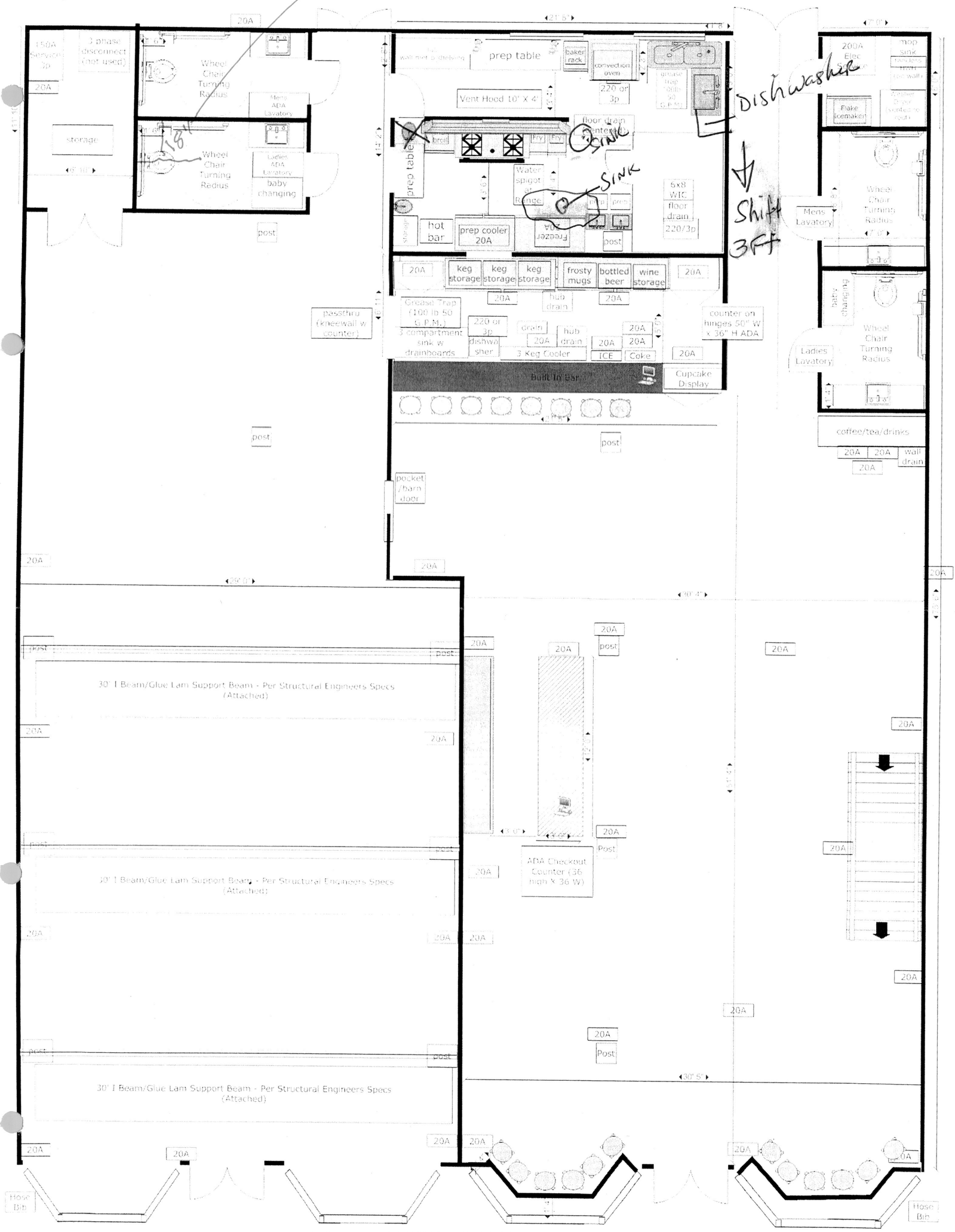

Fryer 105k BTU	Char Broil 60k BTU	60" range 300k BTU	WIC 220A or 3p	Convection Oven 220A or 3p	Vent Hood 10' X 4' w Supression	Dishwasher (under bar) 220A or 3p

The French Market
3840 Hwy 42 Locust Grove GA

Fire Safety & HVAC Upper Level Master Plan

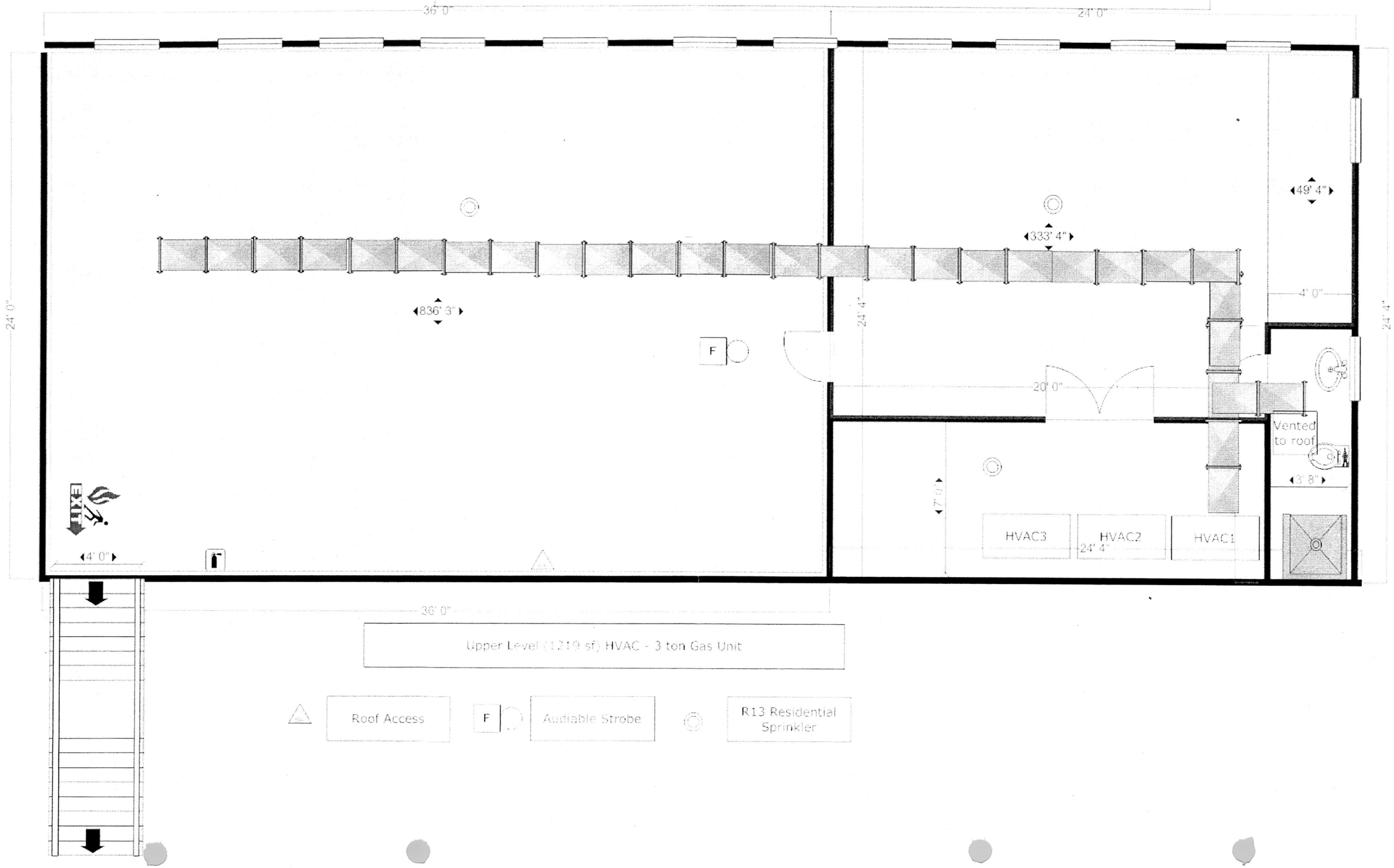

The French Market

Kitchen Design

APPROVED FOR CONSTRUCTION

CITY OF LOCUST GROVE BUILDING DEPARTMENT

These plans are approved for construction under the jurisdiction of the City of Locust Grove or other relevant county/state agency in accordance to the architectural drawings for which this stamp is affixed. Copies of this STAMPED approved plan must be kept on-site at all times. Any changes to these approved plans must be approved by the Community Development Director/Building Official prior to altering project for the particular change. Failure to abide by this approved, or any amended sets, may be subject to citation and any fines or penalties under the laws of the City of Locust Grove.

2/4/11

Building Official
Community Development Department
City of Locust Grove