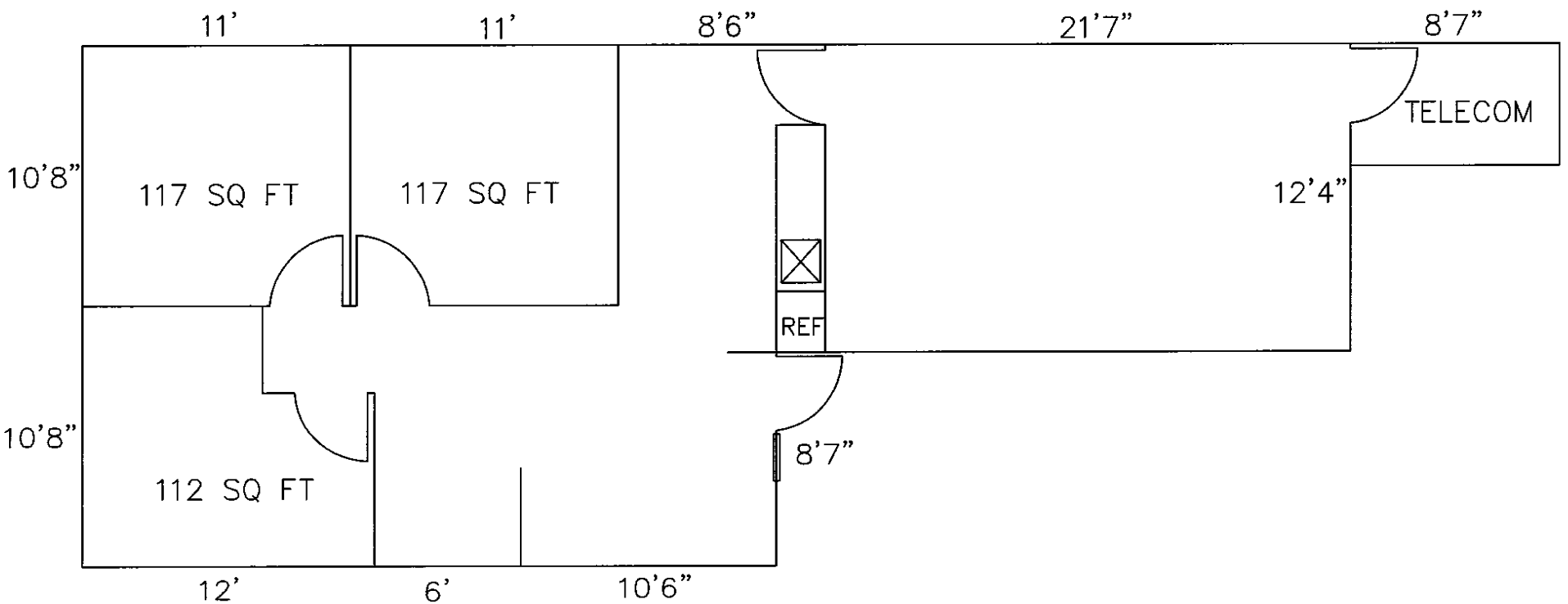
11'
11'
8'6"
21'7"
8'7"
TELECOM
10'8"
117 SQ FT
117 SQ FT
12'4"
REF
10'8"
8'7"
112 SQ FT
12'
6'
10'6"