Clark County Department of Development Services

PERMIT

4701 West Russell Rd • Las Vegas NV 89118
(702) 455-3000

IMPORTANT: Always use the permit number below when requesting inspections or information concerning this permit.

PERMIT NUMBER	PHONE SYSTEM NUMBER	INTERNET PIN NUMBER	ISSUE DATE
07-19993 B/G1	10354081	544411	10/05/07

PROJECT NAME
CARL'S JR

SUBDIVISION

PARCEL NO: 162-35-513-008 RANGE-TOWNSHIP-SECTION 61-21-35

SITE ADDRESS: 5795 S EASTERN AVE
TENANT NAME: CARL'S JR TENANT NO:

PROPERTY OWNER: COUNTY OF CLARK(AVIATION)
CONTRACTOR: W L C CONSTRUCTION

PERMIT: BUILDING COMM/WITH GRADING
RESTAURANT-NEW VALUATION: 500000
COMMERCIAL
NEW RESTAURANT (CARL'S JR) WITH TRASH
ENCLOSURES

UNITS/RMS: 0 SQ FOOTAGE: 3198 NO. STORIES: 1 QAA: YES
OCCUPANCY: A2 TYPE OF CONST: 5B SPRINKLER: N OCC LD: 139

FEE SUMMARY	CHARGED	PAID PREV	PAID
PERMIT FEE	1858.72	.00	1858.72
ZONING PC FEE	185.87	.00	185.87
TRANSPORTATION TAX - C	2398.50	.00	2398.50
WATER USAGE FEE	91.39	.00	91.39

TOTAL PAID 4534.48
PAYMENT TYPE CHECK
NUMBER 63981

CONDITIONS OF PERMIT

I agree to build according to declared description, approved plans, specifications and the Clark County Code. I also agree to call 455-3000 for required inspections as each construction phase is completed.

LICENSED CONTRACTORS DECLARATION

I hereby affirm that I am licensed under the provisions of NRS 624.283

Contractor Signature

OWNER-BUILDER DECLARATION

I, as owner of the property upon which I am requesting to build or improve a structure, and the structure to be built or improved is a residential structure which I intend to occupy. I do not intend to sell said structure or transfer ownership of said structure at least until I occupy the premises for a period of one year under NRS 624.031.
I intend to act as my own contractor and I understand that I am liable to criminal prosecution under 624.212 if I engage in business as a contractor without a licerise and will not be exempt from license requirement as outlined in NRS 624.031.

Applicant Signature | Date 10/05/07 | Issued By PAMELA

THIS PERMIT BECOMES NULL AND VOID if work or construction is not commenced within 180 days from date of issuance, or work is suspended or abandoned for a period of 180 days any time after work is commenced.

RECORDS COPY

Carl's Jr.™

RECORDS SET

MC CARRAN MARKETPLACE @ CLARK COUNTY, NEVADA

ABBREVIATIONS

&	And
L	Angle
@	At
℄	Centerline
Ø	Diameter or Round
#	Pound or Number
(E)	Existing
ABV.	Above
ACOUS.	Acoustical
A.C.	Asphaltic Concrete
A.D.	Area Drain
ADJ.	Adjustable
A.F.F.	Above Finished Floor
AGGR.	Aggregate
AL.	Aluminum
APPROX.	Approximate
ARCH.	Architectural
ASPH.	Asphalt
BD.	Board
BITUM.	Bituminous
BLDG.	Building
BLK.	Block
BLKG.	Blocking
BM.	Beam
BOT.	Bottom
CAB.	Cabinet
C.B.	Catch Basin
CEM.	Cement
CER.	Ceramic
C.I.	Cast Iron
C.G.	Corner Gaurd
CLG.	Ceiling
CLKG.	Caulking
CLO.	Closet
CLR.	Clear
C.O.	Cased Opening
COL.	Column
CONC.	Concrete
CONN.	Connection
CONSTR.	Construction
CONT.	Continuous
CORR.	Corridor
CTSK.	Countersunk
CNTR.	Counter
CTR.	Center
DBL.	Double
DEPT.	Department
D.F.	Drinking Fountain
DET.	Detail
DIA.	Diameter
DIM.	Dimension
DISP.	Dispenser
DN.	Down
D.O.	Door Opening
DWR.	Drawer
D.S.	Downspout
D.S.P.	Dry Standpipe
DWG.	Drawing
E.	East
EA.	Each
E.C.	Electrical Contractor
E.J.	Expansion Joint
EL.	Elevation
ELEC.	Electrical
ELEV.	Elevation
EMER.	Emergency
ENCL.	Enclosure
E.P.	Electrical Panelboard
EQ.	Equal
EQPT.	Equipment
EXST.	Existing
EXPO.	Exposed
EXP.	Expansion
EXT.	Exterior
F.A.	Fire Alarm
F.B.	Flat Bed
F.D.	Floor Drain
FDN.	Foundation
F.E.	Fire Extinguisher
F.E.C.	Fire Extinguisher Cab.
F.H.C.	Fire Hose Cabinet
FIN.	Finish
FL.	Floor
FLASH.	Flashing
FLOUR.	Flourescent
F.O.C.	Face of Concrete
F.O.F.	Face of Finish
F.O.S.	Face of Studs
F.P.C.	Fire Protection Contractor
F.P.M.	Feet Per Minute
F.S.	Full Size
FT.	Foot or Feet
FTG.	Footing
FURN.	Furnished
FURR.	Furring
FUT.	Future
GA.	Gauge
GALV.	Galvanized
G.B.	Grab Bar
G.I.	Galvanized Iron
GL.	Glass
G.C.	General Contractor
GND.	Ground
GR.	Grade
GYP.	Gypsum
H.B.	Hose Bibb
H.C.	Hollow Core
H/C	Handicap
H.D.	Heavy Duty
HDWD.	Hardwood
HDWE.	Hardware
H.M.	Hollow Metal
HORIZ.	Horizontal
HR.	Hour
HGT.	Height
I.D.	Inside Diameter (Dim.)
INSUL.	Insulation
INT.	Interior
JAN.	Janitor
JT.	Joint
K.E.C.	Kitchen Equipment Contractor
KIT.	Kitchen
LAB.	Laboratory
LAM.	Laminate
LAV.	Lavatory
Lbs.	Pounds
LKR.	Locker
L/P	Laminated Plastic
LT.	Light
MAX.	Maximum
M.C.	Medicine Cabinet
MECH.	Mechanical
MEMB.	Membrane
MET.	Metal
MFR.	Manufacturer
MH.	Manhole
MIN.	Minimum
MIR.	Mirror
MISC.	Miscellaneous
M.O.	Masonry Opening
MTD.	Mounted
MUL.	Mullion
N	North
N.I.C.	Not In Contract
NO. or #	Number
NOM.	Nominal
N.T.S.	Not To Scale
O.A.	Overall
OBS.	Obscure
O.C.	On Center
O.D.	Outside Diameter (dim.)
O.F.	Overflow
OFF.	Office
OPNG.	Opening
OPP.	Opposite
P.C.	Plumbing Contractor
PRCST.	Pre-cast
PL.	Plate
P.LAM.	Plastic Laminate
PLAS.	Plaster
PLYWD.	Plywood
PR.	Pair
PT.	Point
P.T.D.	Paper Towel Dispenser
P.O.S.	Point Of Sale
PTN.	Partition
P.T.R.	Paper Towel Receptacle
PVC.	Polyvinylchloride
Q.T.	Quarry Tile
R.	Riser
RAD.	Radius
R.D.	Roof Drain
REF.	Reference
REFR.	Refrigerator
RGTR.	Register
REINF.	Reinforced
REQ.	Required
RESIL.	Resilient
RM.	Room
R.O.	Rough Opening
RWD.	Redwood
R.W.L.	Rain Water Leader
S.	South
S.C.	Seating Contractor/Solid Core
S.C.D.	Seat Cover Dispenser
SCHED.	Schedule
S.D.	Soap Dispenser
SECT.	Section
SH.	Shelf
SHR.	Shower
SHT.	Sheet
SIM.	Similar
S.N.D.	Sanitary Napkin Dispenser
S.N.R.	Sanitary Napkin Receptacle
SPEC.	Specification
SQ.	Square
SST.or S.S.	Stainless Steel
S.SK.	Service Sink
STA.	Station
STD.	Standard
STL.	Steel
STOR.	Storage
STRL.	Structural
SUSP.	Suspended
SYM.	Symmetrical
TRD.	Tread
T.B.	Towel Bar
T.C.	Top of Curb
TEL.	Telephone
TER.	Terrazzo
T&G	Tongue and Groove
THK.	Thick
T.P.	Top of Pavement
T.P.D.	Toilet Paper Dispenser
T.V.	Television
T.W.	Top of Wall
TYP.	Typical
UNF.	Unfinished
U.O.N.	Unless Otherwise Noted
UR.	Urinal
VERT.	Vertical
VEST.	Vestibule
W.	West
W/	With
W.C.	Water Closet
WD.	Wood
W/O	Without
WP.	Waterproof
WSCT.	Wainscot
WT.	Weight

SYMBOLS

	MASONRY BLOCK	3 / A-7	BUILDING SECTION SHEET NO.
	CONCRETE	9 / A-6	DETAIL NO. SHEET NO.
	PROPERTY LINE	12	DOOR NUMBER
	LIMITS OF CONSTRUCTION	2	WINDOW NUMBER
	STUD WALL – 2"x4" @ 16" O.C. – U.N.O.	NAME / XXXX	ROOM NAME ROOM NUMBER
	STRUCTURAL OR FRAMED WOOD MEMBER	7/A-3	DETAIL NO./ ELEV. SHEET NO.
	FINISH WOOD MEMBER	2	COLOR/FINISH NO.
		K	EQUIPMENT
	ALIGN		

GENERAL NOTES

1. DIMENSIONS TAKE PRECEDENCE OVER SCALE. IF DIMENSIONAL ERRORS OCCUR, CONTRACTOR SHALL NOTIFY THE OWNER PRIOR TO COMMENCEMENT OF THAT PORTION OF WORK.
2. BY SUBMITTING A BID, THE CONTRACTOR ACKNOWLEDGES A THOROUGH REVIEW OF THE CONSTRUCTION DOCUMENTS, SPECIFICATIONS, PROJECT PREMISES, AND ALL ADDENDA CONTEMPLATED FOR THE PROJECT. THE BID PRICE SHOULD INCLUDE ALL ITEMS PERTAINING AND IDENTIFIED WITHIN THE PROJECT LIMITS OF CONSTRUCTION IDENTIFIED IN THE DOCUMENTS. ANY DISCREPANCIES NOTED REGARDING SCOPE OF WORK, DRAWINGS, OR BID INSTRUCTIONS SHOULD BE BROUGHT TO THE ATTENTION OF THE CKE PROJECT MANAGER. ALL MATERIALS, UNLESS OTHERWISE NOTED, ARE TO BE FURNISHED AND INSTALLED BY THE CONTRACTOR. IT IS NOT THE INTENT OF THESE DOCUMENTS TO PRESCRIBE MEANS OR METHODS OF ANY TRADE. CONTRACTOR OR VENDOR REQUIRED TO COMPLETE ANY PORTION OF THEIR WORK. NO EXCLUSIONS FOR SUCH SHALL BE PERMITTED.
3. SUB-CONTRACTORS SHALL BE RESPONSIBLE FOR AND OBTAIN ALL PERMITS, LICENSES AND PAY REQUIRED FEES.
4. EACH TOILET ROOM SHALL BE PROVIDED WITH A FORCED DRAFT VENTILATION SYSTEM EFFECTING AN AIR CHANGE EACH FIVE MINUTES.
5. DIMENSIONS SHOWN ON PLANS ARE TO FACE OF STUDS, WOOD COLUMN OR GRID LINES UNLESS OTHERWISE NOTED OR DETAILED
6. ANY OMISSIONS OR CONFLICTS BETWEEN VARIOUS ELEMENTS ON THE PLANS AND SPECIFICATIONS SHALL BE BROUGHT TO THE ATTENTION OF THE OWNER PRIOR TO BIDDING AND/OR BEFORE PROCEEDING WITH ANY WORK.
7. CEILING HEIGHTS NOTED ON FINISH SCHEDULE ARE FROM FINISH CONCRETE FLOOR TO FINISH CEILING.
8. FOR SIZE AND LOCATION OF ALL OPENINGS FOR MECHANICAL DUCT WORK, SEE MECHANICAL DRAWINGS.
9. PROVIDE FIRE EXTINGUISHERS AS REQUIRED BY FIRE DEPARTMENT FIELD INSPECTOR. (SEE SPECIFICATIONS) SEE K-3.
10. UNLESS NOTED OTHERWISE, ALL SIGN OUTLETS INDICATED ON ELECTRICAL DRAWINGS SHALL BE LOCATED IN ATTIC SPACE.
11. WHERE FACTORY FINISHED OR FACTORY PRIMED ITEMS OCCUR SUCH AS GRILLES, DIFFUSERS, METAL TRIM AND ACCESSORIES, ETC., SAME SHALL BE SPRAY PAINTED TO MATCH THE ADJACENT SURFACE.
12. SUBCONTRACTORS SHALL, IN THE WORK OF THEIR TRADES, PERFORM ANY AND ALL CUTTING, PATCHING, REPAIRING, RESTORING, AND THE LIKE NECESSARY TO COMPLETE THE WORK AND TO RESTORE ANY DAMAGED OR AFFECTED SURFACES RESULTING FROM THE WORK OF THIS CONTRACT TO THEIR ORIGINAL CONDITION TO THE SATISFACTION OF THE OWNER.
13. PROVIDE SOLID BLOCKING BEHIND ALL SIGNS, TOILET ROOM FIXTURES, KITCHEN EQUIPMENT FIXTURES, LIGHTING FIXTURES, AND WHERE SHOWN ON PLANS.
14. ALL MATERIALS AND EQUIPMENT SPECIFIED ARE THE REQUIREMENTS OF THE OWNER AND ARE TO BE USED AS SPECIFIED. NO SUBSTITUTIONS WILL BE PERMITTED.
15. THERE SHALL BE NO EXPOSED PIPE, CONDUITS, DUCTS, VENTS, ETC., ALL SUCH LINES SHALL BE CONCEALED OR FURRED AND FINISHED SAME AS ADJACENT MATERIALS.
16. SLOPE ALL FINISHED GRADES AWAY FROM THE BUILDING.
17. TYPICAL DETAILS SHALL APPLY WHERE NO SPECIAL DETAIL IS SHOWN.
18. GLASS AND GLAZING SHALL CONFORM TO CHAPTER 24 U.B.C.
19. GENERAL CONTRACTOR TO INSTALL ROOM CAPACITY SIGN SUPPLIED BY THE OWNER AND SHALL BE TO THE SATISFACTION OF THE BUILDING AND FIRE DEPARTMENT.
20. FINISHES AND MATERIALS OMITTED OR UNCLEAR SHALL BE VERIFIED WITH OWNER PRIOR TO SUBMISSION OF BIDS.
21. ALL MATERIALS SHALL BE NEW AND QUALITY ACCEPTABLE TO THE ARCHITECT AND OWNER. ALL MATERIALS SHALL MEET A.S.T.M. STANDARDS AND ALL APPLICABLE ORDINANCES. CONDEMNED MATERIALS SHALL BE PROMPTLY REMOVED AND ANY DAMAGE CAUSED BY SUCH REMOVAL WILL BE MADE GOOD AT NO COST TO THE OWNER.
22. DRAPERIES, HANGINGS, CURTAINS AND ALL DECORATIVE MATERIAL SHALL MEET CLASS III FIREPROOF SPECIFICATIONS.
23. ALL PUBLIC EXITS ARE TO BE OPENABLE FROM THE INSIDE WITHOUT THE USE OF A KEY OR ANY SPECIAL KNOWLEDGE OR EFFORT.
24. GENERAL CONTRACTOR SHALL COORDINATE WITH THE SUBCONTRACTORS TO IDENTIFY ANY CONFLICTS AMONG THE WORKS OF VARIOUS TRADES AND NOTIFY ARCHITECT/ENGINEER. ANY IDENTIFIED CONFLICTS AND THEIR RESOLUTIONS SHALL BE REVIEWED AND APPROVED BY THE OWNER. SEE NOTE #4 UNDER BID NOTES THIS SHEET.
25. ALL CONSTRUCTION IS TO BE IN ACCORDANCE WITH CURRENT O.S.H.A. REQUIREMENTS. FLUSH BOLTS OR SURFACE BOLTS ARE PROHIBITED.
26. ALL HAND ACTIVATED DOOR OPENING HARDWARE SHALL BE CENTERED AT APPROX. 36" A.F.F. LATCHING AND LOCKING DOORS THAT ARE IN THE PATH OF TRAVEL SHALL BE OPERATED WITH SINGLE EFFORT BY LEVER TYPE HARDWARE, PANIC BARS, OR PUSH-PULL (SEE SPECS), DESIGNED TO PROVIDE PASSAGE WITHOUT THE ABILITY TO GRASP THE OPENING HARDWARE. LOCKED DOORS WILL EXIT IN THE DIRECTION OF TRAVEL.
27. MAXIMUM EFFORT TO OPERATE DOORS SHALL NOT EXCEED 8.5LBS FOR EXTERIOR DOORS AND 5LBS FOR INTERIOR DOORS. SUCH PUSH AND PULL EFFORT SHALL BE APPLIED AT RIGHT ANGLES TO HINGED DOORS.
28. THE HIGHEST OPERABLE PART OF THE PUBLIC TELEPHONE, IF OCCURS, SHALL BE 48" A.F.F. MAXIMUM. TELEPHONE SHALL BE EQUIPPED WITH A RECEIVER THAT GENERATES A MAGNETIC FIELD IN THE AREA OF THE RECEIVER CAP AND SHALL BE EQUIPPED WITH A VOLUME CONTROL CAPABLE OF PRODUCING A MINIMUM OF 12 dba AND A MAX. OF 18 dba ABOVE NORMAL.
29. INDUSTRY STANDARDS SHALL BE USED WHERE INSTALLATION OF MATERIALS IS NEITHER DETAILED ON PLANS OR CALLED OUT IN SPECS.
30. SHOULD CONFLICT &/OR DISCREPANCY APPEAR IN/OR BETWEEN THE DWGS AND SPECS, IT IS DEEMED THE CONTRACTOR HAD ESTIMATED THE MOST EXPENSIVE CONSTRUCTION METHOD OR MATERIAL INVOLVED UNLESS THE CONTRACTOR HAD ASKED FOR & RECEIVED ARCHITECT'S WRITTEN DIRECTIONS PRIOR TO SIGNING THE CONSTRUCTION AGREEMENT AS TO THE METHOD OR MATERIALS TO BE EMPLOYED. NO EXTRA COST TO THE OWNER SHALL BE ALLOWED FOR THESE ITEMS.

PROTOTYPE 14

ENVIRONMENTAL HEALTH SERVICES PLAN NOTES

1. The type of food facility is 100% single service.
2. No alcoholic beverages shall be consumed on the premises.
3. The number of employees per shift (including owners and mangers) is six (6).
4. The food facility is served by The City's municipal water.
5. The food facility is serviced by The City's municipal sewer district.
6. All plumbing, electrical, and gas lines shall be concealed within the building structure to as great extent as possible.
7. All sinks and lavatories in the food facility will be supplied with hot (minimum 140F) and cold running water under pressure.
8. All lavatories or hand sinks will have a combination faucet or premixing faucet capable of supplying warm water for a minimum of 10 seconds.
9. Shelving over wet areas (sinks, mop sinks, etc.) will be metal.
10. All exterior doors shall be self closing.
11. The air screen over the door will have a minimum velocity of 1600 feet per minute measured 3 feet above the ground.
12. All openable windows, vent openings or other similar openings must be provided with tight fitting screens or minimum 16 mesh to the inch.
13. Food service pass through windows shall not exceed 432 square inches.
14. Food service pass through windows exceeding 216 square inches must be provided with an air screen of minimum 600 fpm velocity.
15. A minimum of 50 foot candles (215 lux) of light measured 30" off floor shall be provided in all food preparation, manufacturing, packaging and processing areas and where utensils are cleaned.
16. A min. of 20 foot candles (215 lux) of light measured 30" off floor shall be provided in all food and utensil storage rooms, refrigerated storage, toilet and dressing rooms; alcoholic beverage preparation and utensil cleaning areas (back bar area).
17. All areas of food facility are to be provided with minimum 20 foot candles of light measured 30" off floor during general cleanup activities.
18. Shatter shields for all lights above food preparation, work, and storage areas shall be provided.
19. The min. size sink compartment shall be 18"x18"x12" deep, with a minimum 18" drain board at each end. If against a wall, it must have an 8" integral backsplash and it must be capable of accommodating the largest utensils to be washed.
20. Each handwashing sink must have a wall mounted single service towel and soap dispenser.
21. Toilet room, anteroom and dressing room doors must be self-closing, tight-fitting.
22. Provide a minimum of 12 air changes per hour ventilation to all toilet and dressing rooms.
23. Locate floor sinks so that they are easily accessible for cleaning and servicing.
24. Floor sinks located under equipment must be 50% exposed if no access is provided for cleaning.
25. Soft drink, ice or other dispensers must be push button type, or lever type where the lever contacts the container at least one inch below the rim.
26. Sneeze guards shall comply with EHP-885 requirements.
27. All hoods shall be U.L. listed. Each hood shall be constructed and installed to all U.L. specifications.
28. Type I hood duct must have welded seams.
29. An interlocking switch shall be provided between hood exhaust and make up air systems.
30. The tile floor shall have a smooth surface under all equipment, and that the walk ways will have a light texture only.
31. No floor mats shall be used.
32. All construction must conform with these approved plans. Alterations or changes to these plans must have prior approval by the Plan Check Section of Environmental Health.
33. All construction work must conform to local building codes and have necessary approvals from the local building and fire authority.
34. When finish work is approximately 75% to 80% completed, with plumbing, ventilation and equipment installed, you must call the Specialist assigned to review your plans for a preliminary insp. Requests should be made at least two working days in advance.
35. Upon completion of 100% of the construction, including all finishing work, you must call the Specialist assigned to review your plans to arrange for a final inspection. You will not be issued a Health Permit until you pass a final inspection. In no case should a final inspection be requested less than two working days prior to the proposed opening of the establishment.
36. Provide minimum 36 inch wide aisle in traffic areas.
37. Submit samples of quarry floor tile with cove base and ceiling panel for evaluation and approval prior to installation.
38. Floor surfaces in all areas in which food is prepared, packaged, or stored, where any utensil is washed, where refuse or garbage is stored, where janitorial facilities are located, in all toilet and hand washing areas and in employee change and storage areas shall be of an approved type that continues up the wall four (4) inches, in a seamless manner, forming a 3/8 inch min. radius cove as an integral unit.
39. Wall surfaces in the food preparation and related areas must be drywall, coated with a light color semi-gloss enamel; or the equivalent. (note: light colored is defined as having a light reflectance value of 70% or greater) (see plans)
40. The wall surfaces behind sinks equipped w/ hand spray units shall be covered w/fiberglass reinforced polyester (FRP) stainless steel or the equivalent. The approved wall cover must extend up the wall at least four (4) feet from the back splash and cover the walls behind the sink and accompanying drainboards. (see plans)
41. The ceiling surfaces in all food related areas must be smooth, nonabsorbent, durable, washable and light in color.
42. NSF International standards are used as a guide in the evaluation of food service related equipment and its installation.
43. All new and used food service equipment is subject to final approval by this agency, as determined at the time of the field inspections.
44. All equipment, including shelving, must be supported by six (6) inch high, easily cleanable legs, commercial castors or completely sealed in position on a four (4) inch high continuous concrete curb w/coved base to facilitate ease of cleaning.
45. All curb mounted equipment and cabinetry must be sealed to the curb in an approved manner. Silicone sealant is approved for use on joints or gaps less than 1/8 inch wide. If joints or gaps are over 1/8 inch wide connector strips or flashing used in conjunction w/sealant will be required.
46. The cooking equipment must be spaced six (6) inches apart and from adjacent walls, or flashed together and to the walls, or the cooking equipment must be equipped with commercial castors and quick disconnect gas lines.
47. The lines from the syrup tanks to the drink disp. head must be enclosed in a chase. Use a rigid material, i.e., plaster, foam, etc to seal the opening of the bev. cond. line
48. Compressors and carbonators are to be supported off the floor on six (6) inch high, easily cleanable legs or in an otherwise approved manner.
49. Hoods and mechanical vent must comply w/all req. as set forth in the current edition of the Uniform Mech. Code, as adopted by the local building and fire authority.
50. The canopy-type exhaust hood shall extend a minimum of six (6) inches beyond the outer edges of the cooking surfaces as measured from the inside edge of the hood.
51. Flash the exhaust hood to the walls and ceiling.
52. All joints and seams of exhaust hoods shall be constructed to be tight and easily cleanable.
53. Provide a dry food storeroom or area w/ a min. of 32 linear foot of dedicated floor space for approved back-up storage shelving unis. All storage shelving must be accessible with 30 inch aisle clearance.
54. A shelving unit shall be a min. 18 inches in depth and three tiers high. For example, eight shelving units, each of which is four foot long and three tiers high, would equal 32 linear feet of shelving units.
55. The walk-in refrig./frzr. units must conform w/applicable NSF Intn'l. standards and be completely flashed to the bldg.'s walls and ceiling. The areas above walk-in units may not be used for storage.
56. Provide a min. two inch clear between end wall and the (3) compartment sink, or integral end return. The end return must extend up the wall at least eight inches and be sealed to the wall.
57. Hand wash cleanser and single-use san. towels must be provided in permanently installed disp. at all hand wash facilities. Hot air blowers are not allowed in lieu of the hand towel dispenser. (see plans)
58. Provide a chemical storage shelf and mop rack at janitor area.
59. Provide a water heater w/min. energy input of 69,000 btu
60. All conduit not concealed in walls must be installed 6 inches off the floor and 1/2 inch away from walls.
61. Provide self-closing devices on all exterior and restroom doors

ATTENTION CONTRACTORS - BID NOTES

1. IN C.K.E.'S CONTINUED EFFORT TO PROVIDE THE MOST COST EFFICIENT PROJECT, THIS SET OF PLANS & SPECS WILL BE DIFFERENT FROM PREVIOUSLY BID PROJECTS. THESE PLANS & SPECS REFLECT OUR CURRENT STANDARDS & & METHODS OF CONSTRUCTION AS WELL AS SITE SPECIFIC ITEMS. IT IS THE G.C.'s RESPONSIBILITY TO FAMILIARIZE THEMSELVES WITH THESE DOCUMENTS, & THAT THEIR BID BE BASED SOLELY ON THE CONTENTS WITHIN THESE BID DOCUMENTS.
2. REFER TO ENVIRONMENTAL HEALTH NOTES ON THIS SHEET FOR THE REQUIRED ITEMS REGARDING EACH RELATED TRADES.
3. BIDDER'S ARE REQUIRED TO VISIT SITE & VERIFY CONDITIONS PRIOR TO SUBMITTING BIDS.
4. SUBCONTRACTORS WORK MAY INCLUDE WORK IN CONJUNCTION WITH OTHER TRADES. IT SHALL BE THE G.C.'s RESPONSIBILITY TO MAKE SURE THAT THE SUBCONTRACTORS ARE FAMILIAR WITH ALL DWG.'S & SPECS. FOR THIS PROJECT & SHALL BE REFLECTED IN THE G.C.'s BID.
5. ANY CONFLICTS SHALL BE BROUGHT TO THE ATTENTION OF THE THE OWNER PRIOR TO SUBMISSION OF BIDS. CONTRACTOR SHALL TAKE FULL RESPONSIBILITY FOR ANY CONFLICTS NOT IDENTIFIED PRIOR TO BID.

STUDIES AND UTILITY INFORMATION

SEE CIVIL FOR UTILITY INFORMATION

NOTE:
SEPARATE BOOK FORMAT BUILDING SPECIFICATIONS ARE INCLUDED AS IF BOUND HEREIN AND ARE PART OF BUILDING CONTRACT DOCUMENTS.

SEE SOILS REPORTS BY:
MACTEC ENGINEERING AND CONSULTING, INC.
5145 S. ARVILLE ST., STE A
LAS VEGAS, NV
(702) 251-5449 – FAX(702) 251-3148
PROJECT NO:4400-03-2007

SEE UPDATE LETTER DATED:
PROJECT NO.

LOCATION MAP

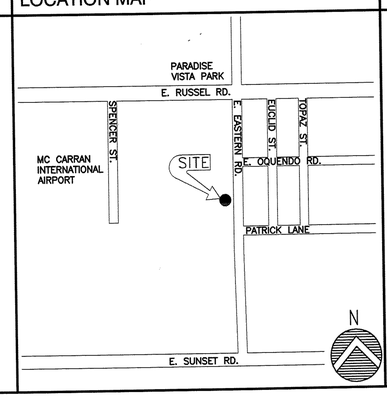

VICINITY MAP

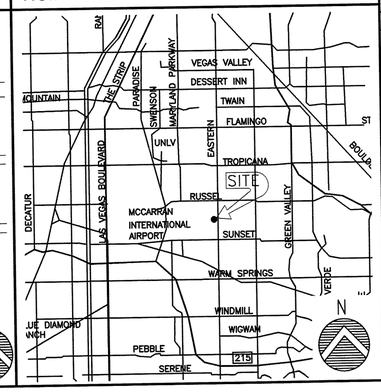

INDEX TO DRAWINGS WITH MATRIX

NO.	SHEET TITLE
T-1	TITLE SHEET
CIVIL	
C1.01	COVER SHEET
C1.02	GENERAL NOTES
C2.01	HORIZONTAL CONTROL PLAN
C3.01	GRADING PLAN
C4.01	UTILITY PLAN
LANDSCAPE	
L-1	LANDSCAPE PLAN
L-2	IRRIGATION PLAN
L-3	IRRIGATION DETAILS
ARCHITECTURAL	
A-1	SITE PLAN/PROJECT DATA
A-2	SITE PLAN DETAILS
A-3	FLOOR PLAN & DETAILS
A-4	EXTERIOR ELEVATIONS & DET.
A-5	EXTERIOR ELEVATIONS
A-6	REFLECTED CLG. PLAN & DET.
A-7	ROOF PLAN & DETAILS
A-8	WALL SECTIONS & DETAILS
A-9	WALL SECTIONS & DETAILS
A-10	DETAILS
A-11	INTERIOR ELEVATIONS
A-12	COUNTER ELEVATIONS & DET.
A-13	WINDOW, DOOR, FINISH & MATERIAL SCHED.'S & DOOR TYPES
STRUCTURAL	
S0.1	GSN, STD ABBREV.,SHT INDEX
S0.2	GENERAL STRUCTURAL NOTES
S0.3	TYPICAL DETAILS
S1.1	FOUNDATION PLAN
S2.1	ROOF FRAMING PLAN
S3.1	FOUNDATION DETAILS
S4.1	FRAMING DETAILS
S4.2	FRAMING DETAILS
PLUMBING	
P-0.0	PLUMBING LEGEND & SPECS.
P-1	PLUMBING SITE PLAN
P-2	PLUMBING SCHEDULES & DIAGRAM
P-3	PLUMBING WASTE & VENT PLAN RISER DIAGRAM
P-3.1	PLUMBING EQUIPMENT ROUGH-IN PLAN
P-4	PLUMBING GAS & WATER PLAN, RISER DIAGRAM
MECHANICAL	
M.0	MECHANICAL LEGEND & SPECS
M.01	MODEL ENERGY COMP. CODE
M-1	MECHANICAL NOTES & SCHED.
M-2	MECHANICAL FLOOR PLAN
M-3	MECH.ROOF PLAN & DETAILS
M-4	WIRING DIAGRAM & HOOD DET.
ELECTRICAL	
E-0	ELEC. SYMBOLS, GEN. NOTES
E-0.1	ELEC. SYMBOLS, GEN. NOTES
E-1	ELECTRICAL SITE PLAN
E-2	MAIN SWITCHBOARD, PANEL SCHEDULE, & SINGLE-LINE DIAGRAM
E-3	ELECTRICAL POWER PLAN
E-4	ELECTRICAL EQUIPMENT SCHEDULE, NOTES & DETAILS
E-5	ELECTRICAL LIGHTING PLAN
E-6	ELECTRICAL ROOF PLAN
E-7	LIGHT FIXT SCHED & DETAILS
E-8	ELECTRICAL IECC FORMS
KITCHEN	
K-1	EQUIPMENT PLAN
K-2	REFRIGERATION PLAN, SCHEDULES & DETAILS
K-3	FIRE PROTECTION PLAN & DET.
K-4	EQUIPMENT DETAILS
K-5	EQUIPMENT DETAILS
K-6	EQUIPMENT DETAILS
K-7	SEATING PLAN AND DETAILS
SIGNAGE	
SN-1	SIGN PROGRAM
SN-2	SIGN PROGRAM
SN-3	SIGN PROGRAM

THIS DRAWING IS AN INSTRUMENT OF SERVICE BETWEEN THE ARCHITECT AND HIS CLIENT, BUT REMAINS THE PROPERTY OF THE ARCHITECT.
© ALL RIGHTS RESERVED 2007

planning/interior design
AIA ARCHITECTS,PC
(702)876-0668
professional corp / certified n.c.a.r.b.

architecture/engineering/site
GARY GUY WILSON
7625 Dean Martin Drive, Suite#100
Las Vegas, Nevada 89139

CONSULTANTS:
CIVIL: CIVILWORKS, INC.
STRUCTL: WRIGHT ENGINEERS
ELEC: SH NEVADA
MECH: SH NEVADA

CARL'S JR RESTAURANT
@ McCARRAN MARKETPLACE
FOR: S.L. INVESTMENTS, MR. STEVE LARSON
CLARK COUNTY, NEVADA

PROJ.NO.	13520701.00
PROJ.ARCH.	G.G.WILSON,AIA
PROJ.MGR	MVM
JOB CAPT	MVM
TECH'N	VAN/EMD
ARCH.CHK	GGW
PH-2/3	02FEB07
PH-4	30MAR07
PH-5	02MAY07

REVISIONS

PRINTS REQUIRE ARCHITECT'S SEAL & SIGN. FOR PROOF OF VALIDITY

GARY G. WILSON REGISTERED No. 545 PROFESSIONAL ARCHITECT STATE OF NEVADA
APR 1 9 2007

TITLE SHEET

SHT.NO. T-1

CARL'S JR. AT MCCARRAN MARKET PLACE @ EASTERN AND RUSSELL

A.P.N:16235513006

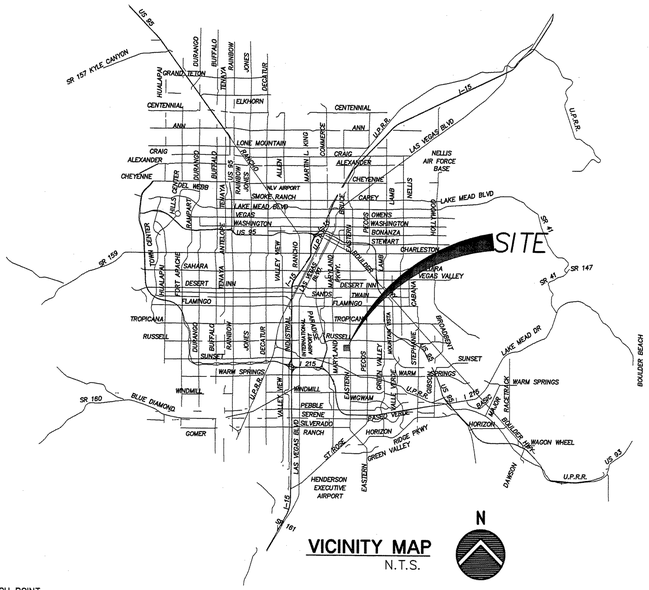

VICINITY MAP

N.T.S.

N

SHEET INDEX

1. COVER SHEET. C1.01
2. NOTE SHEET. C1.02
3. HORIZONTAL CONTROL PLAN – SHEET-01 . . . . . C2.01
4. GRADING PLAN – SHEET-01 . . . . . C3.01
5. UTILITY PLAN – SHEET-01 . . . . . C4.01

GENERAL SITE INFORMATION

NOTE:

PRE-DEVELOPMENT MEETING WITH DEPARTMENT OF DEVELOPMENT SERVICES, CIVIL ENGINEERING DIVISION, OFF-SITE INSPECTOR REQUIRED. CONTACT CIVIL ENGINEERING INSPECTOR AT (702) 455-4610.

APPROVALS

CLARK COUNTY FIRE DEPARTMENT

CLARK COUNTY FIRE DEPARTMENT — DATE

SOUTHWEST GAS CORPORATION

SOUTHWEST GAS CORPORATION — DATE

LAS VEGAS VALLEY WATER DISTRICT

LAS VEGAS VALLEY WATER DISTRICT — DATE

COX COMMUNICATIONS LAS VEGAS, INC

COX COMMUNICATIONS OF LAS VEGAS, INC. — DATE

NEVADA POWER COMPANY

NEVADA POWER COMPANY — DATE

NEVADA POWER COMPANY ACKNOWLEDGES THAT WE HAVE RECEIVED YOUR PLANS AND WILL PROVIDE SERVICE TO ALL ELECTRICAL NEEDS ASSOCIATED WITH THIS PROJECT. NEVADA POWER COMPANY RESERVES THE RIGHT TO ADDRESS ANY EXISTING OR FUTURE CONFLICTS ONCE THE FINAL DESIGN IS COMPLETED. THE NEW SERVICE AND THE RESOLUTION OF ANY CONFLICTS WILL BE ACCOMPLISHED PURSUANT TO THE NEVADA PUBLIC UTILITY COMMISSION'S RULES AND REGULATIONS.

EMBARQ

EMBARQ — DATE

THE AFFIXED EMBARQ NEVADA APPROVAL DOES NOT ASSUME OR GUARANTEE LIABILITY FOR KNOWN OR UNKNOWN CONFLICTS WITH EXISTING OR PROPOSED IMPROVEMENTS. RESOLUTION OF ANY CONFLICT WILL BE ACCOMPLISHED PURSUANT TO LOCAL ORDINANCES, NEVADA REVISED STATUTES AND/OR PUBLIC UTILITY COMMISSION RULES AND REGULATIONS.

CLARK COUNTY WATER RECLAMATION DISTRICT

CLARK COUNTY WATER RECLAMATION DISTRICT — DATE

CCWRD PROJECT CONTROL NUMBER IS _____ SIGNATURE OF THESE PLANS SHALL NOT BE CONSTRUED TO BE A PERMIT FOR OR AN APPROVAL OF ANY VIOLATION OF CLARK COUNTY WATER RECLAMATION DISTRICT RULES, REGULATIONS, OR DESIGN AND CONSTRUCTION STANDARDS. THE APPROVAL OF THESE DRAWINGS DOES NOT GUARANTEE CAPACITY IN THE DISTRICT'S COLLECTION OR TREATMENT SYSTEM.

BASIS OF BEARINGS

SOUTH 00°41'30" EAST BEING THE EAST LINE OF THE SOUTHEAST QUARTER (SE 1/4) OF THE NORTHEAST QUARTER (NE 1/4) OF SECTION 35, TOWNSHIP 21 SOUTH, RANGE 61 EAST, M.D.M., CLARK COUNTY, NEVADA AS SHOWN BY MAP THEREOF ON FILE IN BOOK 113, PAGE 71 OF PLATS IN THE CLARK COUNTY RECORDERS OFFICE, CLARK COUNTY, NEVADA.

BENCHMARK

CLARK COUNTY BENCHMARK: 8C11 25SWS 1998

RIVIT AND ROUND ALUMINUM PLATE IN TOP OF CURB, NORTHEAST CORNER OF EASTERN AVE. AND RUSSELL RD. NEAR THE PC OF EASTERN AVE.

ELEV. = 611.619 (METRIC)
2006.62 (US SURVEY FEET)

LEGEND

DESCRIPTION	EXISTING	PROPOSED
UTILITIES		
B.O. VALVE		
FIRE HYDRANTS		
CLEAN OUT		
GATE VALVE		
METER		
REDUCER		
CAP		
11.25° ELBOW		
22.5° ELBOW		
45° ELBOW		
90° ELBOW		
CROSS		
TEE		
MANHOLES		
ELECTRICAL		
SANITARY SEWER		
STORM DRAIN		
TELEPHONE		
STREET LIGHTS		
100W HPS STLT.		
150W HPS STLT.		
200W HPS STLT.		
250W HPS STLT.		
400W HPS STLT.		
GRADING		
SPOT ELEV.	(12.3±)	12.34 TC
SLOPE	(1.2%±)	1.23%
5' CONT.	(2005)	2005
1' CONT.		2007
SITE		
SIGN		
"L" CURB		
"A" CURB		
EDGE OF PVMT.		
WALL		

LINE TYPES

CL OR SECTION LINE
PROPERTY LINE
RIGHT OF WAY LINE
EASEMENT LINE
SAWCUT LINE
FLOW LINE

SHADES

HEAVY AC PAVEMENT
LIGHT AC PAVEMENT
CONCRETE PAVEMENT

ABBREVIATIONS

ABAN	ABANDON	HP	HIGH POINT
AC	ASPHALTIC CONCRETE	HPS	HIGH PRESSURE SODIUM
ACP	ASBESTOS CEMENT PIPE	ID	INSIDE DIAMETER
ADJ	ADJUST	INT	INTERSECTION
AGG	AGGREGATE	INV	INVERT
AIP	ABANDON IN PLACE	IRR	IRRIGATION
ALT	ALTERNATE	LAT	LATERAL
BC	BACK OF CURB	LF	LINEAL FEET
BCR	BEGINNING OF CURB RETURN	LS	LANDSCAPE
BDRY	BOUNDARY	LT	LEFT
BFE	BASE FLOOD ELEVATION	LVVWD	LAS VEGAS VALLEY WATER DISTRICT
BEG	BEGIN	MAX	MAXIMUM
BM	BENCHMARK	MH	MANHOLE
BSW	BACK OF SIDEWALK	MIN	MINIMUM
BVC	BEGINNING OF VERTICAL CURVE	MTR	METER
CATV	CABLE TV	NAP	NOT A PART
C&G	CURB AND GUTTER	NG	NATURAL GRADE
CBC	CITY OF BOULDER CITY	NDOT	NEVADA DEPARTMENT OF TRANSPORTATION
CC	CLARK COUNTY	NTS	NOT TO SCALE
CCAUSD	CLARK COUNTY AREA UNIFORM STANDARD DRAWING	O/S	OFFSET
CCRFCD	CLARK COUNTY REGIONAL FLOOD CONTROL DISTRICT	OC	ON CENTER
CCWRD	CLARK COUNTY WATER RECLAMATION DISTRICT	OD	OUTSIDE DIAMETER
CIP	CAST IRON PIPE	OHP	OVERHEAD POWER LINE
CL	CENTERLINE	PB	PULL BOX
CLV	CITY OF LAS VEGAS	PC	POINT OF CURVATURE
CM	CITY OF MESQUITE	PCC	POINT OF COMPOUND CURVE
CMP	CORRUGATED METAL PIPE	PI	POINT OF INTERSECTION
CMU	CONCRETE MASONRY UNIT	PL	PROPERTY LINE
CNLV	CITY OF NORTH LAS VEGAS	PP	POWER POLE
CO	CLEAN OUT	PRC	POINT OF REVERSE CURVE
COH	CITY OF HENDERSON	PROP	PROPOSED
COMM	COMMUNICATIONS	PT	POINT OF TANGENT
CONC	CONCRETE	PVC	POLY VINYL CHLORIDE PIPE
COND	CONDUIT	PVI	POINT OF VERTICAL INTERSECTION
CONST	CONSTRUCT OR CONSTRUCTION	PVMT	PAVEMENT
CULV	CULVERT	Q	RATE OF FLOW
DC	DEPRESSED CURB	R or RAD	RADIUS
DI	DROP INLET	RCB	REINFORCED CONCRETE BOX
DIA	DIAMETER	RCP	REINFORCED CONCRETE PIPE
DIP	DUCTILE IRON PIPE	RR	RAILROAD
DMH	DROP MANHOLE	RT	RIGHT
DOM	DOMESTIC	ROW	RIGHT-OF-WAY
DWY	DRIVEWAY	SS	SANITARY SEWER
E or ELEC	ELECTRIC	SD	STORM DRAIN
EAC	EDGE OF AC	SHT	SHEET
EC	END OF CURVE	SIG	SIGNAL
ECR	END OF CURB RETURN	SNWA	SOUTHERN NEVADA WATER AUTHORITY
EL or ELEV	ELEVATION	STA	STATION
EP	EDGE OF PAVEMENT	SL or STLT	STREET LIGHT
EVC	END OF VERTICAL CURVE	STD	STANDARD
EW	EACH WAY	SVZ	SIGHT VISIBILITY ZONE
EX or EXIST	EXISTING	SW	SIDEWALK
FAST	FREEWAY & ARTERIAL SYSTEM OF TRANSPORTATION	T or TEL	TELEPHONE
FC	FACE OF CURB	TC	TOP OF CURB
FF	FINISH FLOOR	TF	TOP OF FOOTING
FG	FINISH GRADE	TMH	TOP OF MANHOLE
FH	FIRE HYDRANT	TRANS	TRANSITION
FL	FLOW LINE	TS	TRAFFIC SIGNAL
FO	FIBER OPTICS	TW	TOP OF WALL
FS	FINISHED SURFACE	TYP	TYPICAL
FTG	FOOTING	UDACS	UNIFORM DESIGN AND CONSTRUCTION STANDARDS
G	GAS	VC	VERTICAL CURVE
GALV	GALVANIZED	VCP	VITRIFIED CLAY PIPE
GB	GRADE BREAK	VERT	VERTICAL
H	HIGH OR HEIGHT	VG	VALLEY GUTTER
HDPE	HIGH DENSITY POLYETHYLENE	WL	WATER LINE
HDWL	HEADWALL	W/	WITH
HGL	HYDRAULIC GRADE LINE	W/O	WITHOUT
HOR	HORIZONTAL	W	WIDE OR WIDTH

DEVELOPER

SL INVESTMENTS INC.
2950 E FLAMINNGO SUITE H
LAS VEGAD,NEVADA ,89
CONTACT:STEVE LARSON
PHONE:702-734-2276
FAX:702-737-6934

OWNER

COUNTY OF CLARK AVIATION
MCCARRAN MARKETPLACE
222 VIA MACARRAN WAY
LAS VEGAS, NEVADA, 89119

UTILITY PROVIDERS

WATER: . . . . . LAS VEGAS VALLEY WATER DISTRICT

SEWER: . . . . . CLARK COUNTY WATER RECLAMATION DISTRICT

GAS: . . . . . SOUTHWEST GAS CORPORATION

ELECTRIC: . . . . . NEVADA POWER COMPANY

TELEPHONE: . . . . . EMBARQ (SPRINT TELEPHONE NEVADA)

CABLE TV: . . . . . COX COMMUNICATIONS OF LAS VEGAS

TRASH: . . . . . REPUBLIC SERVICES, INC.

CivilWorks Inc
Engineering with "sensible" solutions tailored to your "specific" needs.
7625 Dean Martin Drive, Suite #101 • Las Vegas, NV 89139-5975
Office #:(702) 876-3474 • Fax #:(702) 876-1323

CARL'S JR. AT MCCARRAN MARKETPLACE @ EASTERN & RUSSELL
PROJECT INFORMATION

OWNER/DEVELOPER: SL INVESTMENTS INC
2950 E FLAMINGO SUITE H
LAS VEGAS, NEVADA 89119
PH: 702-734-2276
CLARK COUNTY, NEVADA

PROJ. No.	5/200/700.100	DATE	19Apr07
PROJ. ENGR.	ALISON HAYES	TECH'N	LP/CJS
DRAWN BY	ALISON HAYES	ENGR CHK.	AHH
REVISIONS/			

PRINTS REQUIRE ENGINEER'S SEAL AND SIGN FOR PROOF OF VALIDITY

PROFESSIONAL ENGINEER – STATE OF NEVADA
ALISON HAYES
Exp: 06/30/07
CIVIL
No. 16010
4/19/07

COVER SHEET

SHEET # 1.01
SHEET 1 OF 5

FILE # 1

PROFESSIONAL ENGINEER – STATE OF NEVADA
ALISON HAYES
Exp. 6/30/07
CIVIL
No. 16010
4/19/07

SAFETY ALERT
Call Before You Overhead 1-702-227-2929

AVOID HITTING UNDERGROUND TRAFFIC SIGNAL AND STREET LIGHT SYSTEM CONDUITS IT'S COSTLY!
Call before you UnderGround C.C. TRAFFIC OPERATIONS 1-702-455-7511
Call 1-702-229-6611 LV AREA COMPUTERIZED TRAFFIC SYS.

Avoid cutting underground utility lines. It's costly.
Call before you Dig 1-800-227-2600

ENGINEER'S GENERAL NOTES

1. THE CONTRACTOR IS TO VISIT THE SITE AND VERIFY ALL DIMENSIONS AND SITE CONDITIONS BEFORE BIDDING AND STARTING WORK, AND ACCEPT THEM AS HE FINDS THEM. UNLESS NOTIFYING THE ARCHITECT, ENGINEER AND/OR OWNER IN WRITING AND RECEIVING WRITTEN INSTRUCTIONS PRIOR TO BIDDING THE WORK, NO EXTRA COST TO THE CONSTRUCTION CONTRACT, THE ARCHITECT, ENGINEER AND/OR OWNER SHALL BE ALLOWED DUE TO THE PRIOR CONDITIONS.

2. SHOULD CONFLICT AND/OR DISCREPANCY APPEAR IN/OR BETWEEN THE DRAWINGS AND THE SPEC'S, OR WORK PERFORMED BY OTHERS, WHICH AFFECTS THE WORK, THE CONTRACTOR IS TO NOTIFY THE ARCHITECT, ENGINEER AND/OR OWNER IN WRITING AT ONCE AND RECEIVE WRITTEN INSTRUCTIONS PRIOR TO PROCEEDING. SHOULD THE CONTRACTOR PROCEED PRIOR TO RECEIPT OF THE ARCHITECT'S, ENGINEER'S AND/OR OWNER'S WRITTEN INSTRUCTIONS, THE CONTRACTOR SHALL MAKE GOOD AND CORRECT ANY WORK AND/OR DAMAGES RESULTING FROM THE PROCEDURE. NO EXTRA COST TO THE CONSTRUCTION CONTRACT, THE ARCHITECT, ENGINEER AND/OR OWNER SHALL BE ALLOWED FOR SUCH CORRECTIONS.

3. SHOULD CONFLICT AND/OR DISCREPANCY APPEAR IN/OR BETWEEN THE DRAWINGS AND SPEC'S, IT IS DEEMED THE CONTRACTOR TO HAVE ESTIMATED THE MOST EXPENSIVE CONSTRUCTION METHOD OR MATERIAL INVOLVED UNLESS THE CONTRACTOR HAD ASKED FOR AND RECEIVED WRITTEN DECISIONS FROM THE ARCHITECT, ENGINEER AND/OR OWNER PRIOR TO SIGNING OF THE CONSTRUCTION AGREEMENT AS TO THE METHOD OR MATERIALS TO BE EMPLOYED, NO EXTRA COST TO THE CONSTRUCTION CONTRACT, THE ARCHITECT, ENGINEER AND/OR OWNER SHALL BE ALLOWED FOR THESE ITEMS.

4. SHOULD DIMENSIONAL ERRORS OCCUR THE CONTRACTOR SHALL NOTIFY THE ARCHITECT, ENGINEER AND/OR OWNER PRIOR TO COMMENCEMENT OF THAT PORTION OF THE WORK. DIMENSIONS SHALL TAKE PRECEDENCE OVER SCALE MEASUREMENTS AND DETAIL DRAWINGS SHALL TAKE PRECEDENCE OVER GENERAL SMALL SCALE DRAWINGS. DETAILS REPRESENTATIONS HAVING THE LARGER SCALE SHALL GOVERN. WORK INDICATED BUT NOT PARTICULARLY DETAILED OR SPECIFIED SHALL BE EQUAL TO SIMILAR PARTS THAT ARE DETAILED OR SPECIFIED. THE CONTRACTOR SHALL VERIFY ALL DIMENSIONS IN THE FIELD BEFORE SHOP DRAWINGS ARE MADE AND BEFORE ANY WORK IS CONSTRUCTED OR FABRICATED.

5. THE CONTRACTOR IS TO CONFIRM ADA ACCESS RAMPS AND AREAS ARE WITHIN THE ADA STANDARDS/REQUIREMENTS FOR CROSS SLOPE AND RUNNING SLOPE PRIOR TO CONSTRUCTION. THE CONTRACTOR SHALL NOTIFY THE ARCHITECT, ENGINEER AND/OR OWNER, IN WRITING IMMEDIATELY OF ANY ADA ACCESS AREAS THAT DO NOT MEET ADA STANDARDS/REQUIREMENTS. SHOULD THE CONTRACTOR PROCEED PRIOR TO RECEIPT OF THE ARCHITECT'S, ENGINEER'S AND/OR OWNER'S WRITTEN INSTRUCTIONS, THE CONTRACTOR SHALL CORRECT THE WORK RESULTING FROM PROCEDURE. NO EXTRA LOST TO THE CONSTRUCTION CONTRACT SHALL BE ALLOWED FOR SUCH CORRECTIONS.

DEVIATIONS FROM STANDARDS

NONE.

CLARK COUNTY TRAFFIC NOTES

1. ALL PERMANENT TRAFFIC CONTROL DEVICES CALLED FOR HEREON SHALL BE IN PLACE AND IN FINAL POSITION PRIOR TO ALLOWING ANY PUBLIC TRAFFIC ONTO THE PORTIONS OF THE ROAD(S) BEING IMPROVED HEREUNDER, REGARDLESS OF THE STATUS OF COMPLETION OF PAVING OR OTHER OFF-SITE IMPROVEMENTS CALLED FOR BY THESE PLANS.

2. BEFORE ANY WORK IS STARTED IN THE RIGHT-OF-WAY, THE CONTRACTOR SHALL INSTALL ALL ADVANCE WARNING SIGNS FOR THE CONSTRUCTION ZONE. THE CONTRACTOR SHALL INSTALL TEMPORARY GROUND MOUNTED STOP SIGNS AT ALL NEW STREET ENCROACHMENTS INTO EXISTING COUNTY STREETS IMMEDIATELY AFTER FIRST GRADING WORK IS ACCOMPLISHED, AND SHALL MAINTAIN SAID SIGNS UNTIL PERMANENT SIGNS ARE INSTALLED.

3. ALL CONSTRUCTION SIGNING, BARRICADING AND PAVEMENT MARKINGS SHALL CONFORM TO THE NEVADA WORK ZONE TRAFFIC HANDBOOK – 1986 AND TO THE MANUAL ON UNIFORM TRAFFIC CONTROL DEVICES, CURRENT EDITION.

4. IF THE IMPROVEMENTS NECESSITATE THE OBLITERATION, TEMPORARY OBSTRUCTION, TEMPORARY REMOVAL, OR RELOCATION OF ANY EXISTING TRAFFIC PAVEMENT MARKING, SUCH PAVEMENT MARKING SHALL BE RESTORED OR REPLACED WITH LIKE MATERIALS TO THE SATISFACTION OF THE COUNTY TRAFFIC MANAGER.

5. THE DEVELOPER SHALL BE RESPONSIBLE TO PROVIDE AND INSTALL ALL PERMANENT SIGNS SHOWN ON THE PLANS. STREET NAME SIGNS SHALL CONFORM IN THEIR ENTIRETY TO CLARK COUNTY AREA STANDARDS. ALL OTHER SIGNS SHALL BE STANDARD SIZE UNLESS OTHERWISE SPECIFIED ON THE PLANS. ALL SIGNPOSTS SHALL BE INSTALLED IN ACCORDANCE WITH CLARK COUNTY AREA STANDARDS. ALL SIGNS SHALL USE TYPE III SHEETING.

6. IF A PROPOSED STREETLIGHT STANDARD IS FIELD LOCATED TO WITHIN FIVE (5) FEET OF ANY SIGN SHOWN HEREON TO BE MOUNTED ON A SIGN POST, CHANGE SIGN MOUNTING TO ONE ON THE STREETLIGHT STANDARD.

7. PRIOR TO CONSTRUCTION, THE STREET SIGN CONTRACTOR SHALL OBTAIN STREET NAMES AND BLOCK NUMBERING FROM THE CURRENT PLANNING DIVISION OF THE DEPARTMENT OF COMPREHENSIVE PLANNING.

8. ALL TRAFFIC SIGNAL POLE ASSEMBLIES, STEEL PEDESTALS FOR CABINETS AND STREETLIGHT POLES SHALL BE GALVANIZED PER ASTM A-123.

9. ALL STREET LIGHTING INSTALLATIONS EXCEPT NOTED ON THE STREET LIGHTING PLANS SHALL CONFORM TO THE UNIFORM STANDARD DRAWINGS AND THE UNIFORM STANDARD SPECIFICATIONS FOR PUBLIC WORKS CONSTRUCTION, OFF-SITE IMPROVEMENTS, CLARK COUNTY, NEVADA, LATEST EDITION OF EACH.

10. THE FOLLOWING CLARK COUNTY UNDERGROUND FACILITIES MAY BE LOCATED IN YOUR PROJECT AREA: STREET LIGHTING, TRAFFIC SIGNALS, AND FREEWAY AND ARTERIAL SYSTEM OF TRANSPORTATION (F.A.S.T.) INTERCONNECT CABLE. YOU MUST CONTACT CLARK COUNTY TRAFFIC MANAGEMENT DIVISION, OPERATIONS UNIT AT 455-7511 FOR LOCATIONS AT LEAST 48 HOURS PRIOR TO WORKING IN THE AREA. CLARK COUNTY IS NOT A MEMBER OF "CALL BEFORE YOU DIG" (UNDERGROUND SERVICE ALERT), AND A CALL TO THAT ORGANIZATION DOES NOT RELIEVE YOU OF LIABILITY FOR CLARK COUNTY FACILITIES.

11. F.A.S.T. INTERCONNECT CABLE POLICY IS IN EFFECT. INTERCONNECT CABLE MUST BE MAINTAINED AT ALL TIMES. DEVELOPER/CONTRACTOR SHALL PROVIDE TEMPORARY OVERHEAD INTERCONNECT CABLE WHILE PERMANENT CABLE IS BEING RELOCATED. TEMPORARY AERIAL INSTALLATION MUST BE ACCEPTABLE TO THE COUNTY TRAFFIC MANAGER AND TO F.A.S.T. ANY DAMAGE TO THIS CABLE IS DEEMED IN EMERGENCY BY F.A.S.T., CITY OF LAS VEGAS, CLARK COUNTY, AND NDOT AND MUST BE REPAIRED IMMEDIATELY TO F.A.S.T. ACCEPTANCE. $2,500 PER DAY DAMAGES MAY BE ASSESSED AFTER 24 HOURS HAS ELAPSED FROM TIME OF BREAK OR DAMAGE.

12. ALL NEW OR REPLACEMENT TRAFFIC SIGNAL LOOPS SHALL BE INSTALLED USING CABLE-IN-DUCT WIRING, SHALL HAVE INDEPENDENT LEAD-IN WIRES FOR EACH LOOP FROM THE CONTROLLER TO THE PULL-BOX, AND EACH LEAD-IN SHALL BE INDIVIDUALLY TAGGED.

13. TRAFFIC SIGNAL PEDESTRIAN HEADS SHALL BE THE L.E.D. TYPE.

14. ELECTRICAL POWER SERVICE POINT LOCATION(S) FOR STREET LIGHTING AND TRAFFIC SIGNALS MUST BE INDICATED ON THE PLANS. IF CONNECTING TO AN EXISTING CIRCUIT, INDICATE LOCATION OF EXISTING SERVICE POINT FOR EACH CIRCUIT.

15. WHEN STREETLIGHTS ARE TO BE CONNECTED TO AN EXISTING CIRCUIT, AN ELECTRICAL ENGINEER OR A CLARK COUNTY APPROVED LICENSED ELECTRICIAN MUST CERTIFY THAT THE EXISTING CIRCUIT IS CAPABLE OF HANDLING THE ADDITION CIRCUIT LOAD.

16. CLARK COUNTY RESERVES THE RIGHT TO REJECT STREETLIGHT AND TRAFFIC SIGNAL POLES AND ASSEMBLIES WHICH HAVE A "STRIPED" APPEARANCE.

17. PRIOR TO BEGINNING OF CONSTRUCTION, MODIFICATION, OR RELOCATION OF ANY TRAFFIC SIGNAL SYSTEM, WRITTEN NOTICE SHALL BE SUBMITTED TO THE CLARK COUNTY TRAFFIC MANAGEMENT DIVISION OF THE DATE THAT WORK WILL BEGIN.

18. THREE (3) NORMAL WORKING DAYS PRIOR TO TURN-ON OR COMPLETION OF MODIFICATION(S) TO A TRAFFIC SIGNAL SYSTEM, WRITTEN NOTICE SHALL BE SUBMITTED TO THE CLARK COUNTY TRAFFIC MANAGEMENT DIVISION THAT WORK IS BEING COMPLETED AND THE PROPOSED DATE OF COMPLETION.

CLARK COUNTY WATER RECLAMATION DISTRICT NOTES

1. ALL CONSTRUCTION AND MATERIALS SHALL BE IN ACCORDANCE WITH THE LATEST EDITION OF THE DESIGN AND CONSTRUCTION STANDARDS FOR WASTEWATER COLLECTION SYSTEMS AND THE UNIFORM STANDARD SPECIFICATIONS FOR PUBLIC WORKS', CONSTRUCTION OFF-SITE IMPROVEMENTS, CLARK COUNTY AREA, NEVADA, AS AMENDED. IN ALL CASES, THESE STANDARDS SHALL SUPERSEDE THE UNIFORM STANDARD SPECIFICATIONS. IT WILL BE THE RESPONSIBILITY OF THE CONTRACTOR TO BE AWARE OF THE CONTENTS OF THE ABOVE SPECIFICATION BOOKS.

2. THESE STANDARDS SHALL APPLY TO ALL CONSTRUCTION.

3. SEWER MAINS ONLY TO BE LAID IN SEWER TRENCHES.

4. ALL LATERALS TO BE LAID AT NOT LESS THAN MINIMUM SLOPES AS SHOWN IN THESE STANDARDS.

5. IT SHALL BE THE CONTRACTOR'S RESPONSIBILITY TO PERFORM CONSTRUCTION AS PER PLANS. ANY ADDITIONS, DELETIONS OR CHANGES SHALL FIRST MEET WITH THE APPROVAL OF THE CONTROLLING AGENCY.

6. SOIL TESTING SHALL BE IN ACCORDANCE WITH SECTION 3.11 OF THESE STANDARDS.

7. ALL EXFILTRATION, INFILTRATION, AIR TESTING AND TELEVISING OF LINES SHALL BE IN ACCORDANCE WITH THESE STANDARDS.

8. CUT SHEETS MUST BE SUBMITTED TO THE AGENCY BEFORE CONSTRUCTION WILL BE PERMITTED TO START.

9. ALL CONTRACTORS INSTALLING SEWER MAINS THAT WILL BE UNDER JURISDICTION OF THE CONTROLLING AGENCY MUST BE CLASS "A" CONTRACTORS.

BASIS OF BEARINGS

SOUTH 00°41'30" EAST BEING THE EAST LINE OF THE SOUTHEAST QUARTER (SE 1/4) OF THE NORTHEAST QUARTER (NE 1/4) OF SECTION 35, TOWNSHIP 21 SOUTH, RANGE 61 EAST, M.D.M., CLARK COUNTY, NEVADA AS SHOWN BY MAP THEREOF ON FILE IN BOOK 113, PAGE 71 OF PLATS IN THE CLARK COUNTY RECORDERS OFFICE, CLARK COUNTY, NEVADA.

BENCHMARK

CLARK COUNTY BENCHMARK: 8C11 25SWS 1998

RIVIT AND ROUND ALUMINUM PLATE IN TOP OF CURB, NORTHEAST CORNER OF EASTERN AVE. AND RUSSELL RD. NEAR THE PC OF EASTERN AVE.

ELEV. = 611.619 (METRIC)
2006.62 (US SURVEY FEET)

LAS VEGAS VALLEY WATER DISTRICT NOTES

LVVWD PROJECT # _____

1. NO WORK SHALL BEGIN UNTIL THE WATER PLANS HAVE BEEN APPROVED FOR CONSTRUCTION BY THE LVVWD. FOLLOWING WATER PLAN APPROVAL, NOTICE SHALL BE GIVEN TO THE LVVWD COMMUNICATION SUPPORT CENTER (258-7171) TWO (2) WORKING DAYS PRIOR TO THE START OF CONSTRUCTION. FOR FUTURE INSPECTIONS, NOTICE MUST BE GIVEN BY 2:00 P.M. THE BUSINESS DAY PRIOR TO THE REQUESTED LVVWD INSPECTION. WHEN REQUESTING INSPECTIONS, PLEASE REFER TO THE PROJECT # IDENTIFIED ABOVE.

2. ALL WORK SHALL CONFORM TO THE LVVWD STANDARD PLATES, DRAWINGS, AND SPECIFICATIONS, AND TO THE 2003 EDITION OF THE UNIFORM DESIGN AND CONSTRUCTION STANDARDS FOR POTABLE WATER SYSTEMS (UDACS).

3. ALL WORK, EXCEPT AS MODIFIED BY THESE PLANS OR BY NOTE 2 ABOVE, SHALL BE DONE IN ACCORDANCE WITH THE MOST RECENT DRAFT OR EDITION OF THE UNIFORM STANDARD SPECIFICATIONS FOR PUBLIC WORKS CONSTRUCTION OFFSITE IMPROVEMENT, CLARK COUNTY AREA.

4. A SINGLE PIPE MATERIAL SHALL BE USED THROUGHOUT THE PROJECT UNLESS OTHERWISE APPROVED BY THE LVVWD.

5. ALL SERVICE LATERALS TWO (2) INCHES IN DIAMETER AND SMALLER SHALL BE TYPE K COPPER TUBING WITH LVVWD APPROVED SERVICE SADDLES.

6. ALL WATER METER BOXES SHALL BE LOCATED OUTSIDE OF DRIVEWAY AREAS.

7. ALL VALVES SHALL BE LOCATED OUTSIDE OF DRIVEWAYS, VALLEY AND CURB GUTTERS.

8. ALL WATER AND STORM DRAIN OR SANITARY SEWER CROSSINGS SHALL CONFORM TO SECTION 2.19 OF THE 2003 EDITION OF THE UDACS.

9. ALL WATER FACILITIES SHALL BE FILLED, DISINFECTED, PRESSURE TESTED, FLUSHED, FILLED, AND AN ACCEPTABLE WATER SAMPLE OBTAINED, PRIOR TO CONNECTION TO THE LVVWD DISTRIBUTION SYSTEM.

10. THE CONTRACTOR MUST OBTAIN ALL METERS TWO (2) INCHES AND SMALLER FORM LVVWD CENTRAL STORES. TELEPHONE 258-3152 OR 258-3802, TWO (2) WORKING DAYS PRIOR TO METER PICKUP.

11. ANY INTERRUPTION OF SERVICE MUST BE PERFORMED IN ACCORDANCE WITH UDACS SECTION 3.13.01, AND APPROVED BY THE LVVWD INSPECTION DIVISION PRIOR TO SHUTDOWN. PROPER WRITTEN NOTIFICATION MUST BE GIVEN TO ALL AFFECTED CUSTOMERS.

12. ALL WATER FACILITY CONSTRUCTION MATERIALS USED MUST BE AS LISTED ON THE LVVWD PRE-APPROVED MATERIALS AND MANUFACTURER'S LISTING FOR NEW FACILITIES, LATEST REVISION, OR SPECIFICALLY APPROVED ON THESE PLANS.

13. TELEPHONE "CALL BEFORE YOU DIG" AT 1-800-227-2600.

APPROVED FOR CONSTRUCTION

LAS VEGAS VALLEY WATER DISTRICT DATE:

LVVWD PROJECT # _____

DEPARTMENT OF DEVELOPMENT SERVICES CIVIL ENGINEERING DIVISION NOTES

1. INSPECTIONS ARE REQUIRED. CALL 24 HOURS IN ADVANCE, 455-4610. YOUR PERMIT, APPROVED PLANS, AND BARRICADE PLANS FOR THIS WORK MUST BE ON THE JOB SITE AT ALL TIMES.

2. EXACT LOCATION OF ALL SAW-CUT LINES SHALL BE DETERMINED IN THE FIELD BY THE CLARK COUNTY INSPECTOR.

3. CURB AND GUTTER WITH A GRADE OF LESS THAN 4/10 OF ONE PERCENT SHALL BE CONSTRUCTED BY FORMING. EACH JOINT SHALL BE CHECKED FOR GRADE PRIOR TO CONSTRUCTION AND WATER TESTED AS SOON AS POSSIBLE AFTER CONSTRUCTION.

4. FINAL ASPHALTIC CONCRETE (AC) PAVEMENT SURFACES SHALL BE ONE-HALF (1/2") INCH ABOVE THE LIP OF THE GUTTER (INCLUDING OPEN GRADE).

5. ALL OFF-SITE IMPROVEMENT CONSTRUCTION SHALL CONFORM TO THE UNIFORM STANDARD SPECIFICATIONS AND STANDARD DRAWINGS CLARK COUNTY AREA NEVADA AND CLARK COUNTY SUPPLEMENT TO UNIFORM STANDARD DRAWINGS AND SPECIFICATIONS, LATEST REVISION.

6. PRIVATE STREETS, CURB & GUTTER AND VALLEY GUTTERS REFLECTED ON THESE PLANS ARE TO BE INSPECTED BY A CLARK COUNTY INSPECTOR.

7. WHEEL CHAIR RAMPS SHALL BE CONSTRUCTED IN EACH QUADRANT OF AN INTERSECTION PER STANDARD DRAWING 235. EXACT LOCATION OF RAMPS SHALL BE DETERMINED IN THE FIELD BY A CLARK COUNTY INSPECTOR.

8. PROPER SIGNS, BARRIERS, BARRICADES AND LIGHTS SHALL BE PLACED AND MAINTAINED IN ACCORDANCE WITH THE LATEST "MANUAL ON UNIFORM TRAFFIC CONTROL DEVICES FOR STREETS AND HIGHWAYS" TRAFFIC, SCHOOL, OR STREET SIGNS OF ANY KIND ARE NOT TO BE MOVED FOR ANY REASON WITHOUT FIRST COORDINATING WITH THE DEPARTMENT OF DEVELOPMENT SERVICES, CIVIL ENGINEERING DIVISION INSPECTOR @ 455-4610.

9. THIS PLAN DOES NOT AUTHORIZE CLOSURE OF ANY ROAD OR STREET.

10. NO OPEN TRENCH SHALL BE ALLOWED ACROSS ANY STREET OR WITHIN TEN (10') FEET OF ANY TRAVEL-WAY, EXCEPT WHEN WORK IS IN ACTUAL PROGRESS. AREAS COVERED BY ACCEPTABLE STEEL PLATE ARE NOT TO BE CONSTRUED AS A TRENCH. NO OPEN TRENCH IS PERMITTED IN EXCESS OF 500 FEET OR LENGTH NECESSARY TO ACCOMMODATE PIPE INSTALLATION IN A SINGLE DAY, WHICH EVER IS GREATER. ALL TRENCH CROSSINGS AND BACKFILL SHALL MEET THE STANDARD SPECIFICATION UNLESS OTHERWISE STATED.

11. A TEMPORARY PATCH IS TO BE IN PLACE AT THE END OF EACH WORK DAY WHERE THE BACKFILL IN THE TRENCH HAS BEEN COMPLETED AND PRIOR TO OPENING THE WORK AREA BACK TO THE TRAFFIC AND IS TO BE MAINTAINED BY THE PERMITEE. A PERMANENT PATCH IS TO BE IN PLACE WITHIN THIRTY (30) DAYS AFTER THE INSTALLATION OF THE TEMPORARY PATCH.

12. COMPACTION TESTS ARE REQUIRED.

GENERAL CONSTRUCTION NOTES

1. CONTRACTOR SHALL PROVIDE ALL NECESSARY HORIZONTAL AND VERTICAL TRANSITION BETWEEN NEW CONSTRUCTION AND EXISTING SURFACES TO PROVIDE FOR PROPER DRAINAGE AND INGRESS AND EGRESS TO SAID CONSTRUCTION. EXTENT OF TRANSITIONS TO BE DETERMINED BY THE COUNTY ENGINEER.

2. LOCATIONS OF UNDERGROUND UTILITIES SHOWN ON THE DRAWINGS WERE OBTAINED FROM INFORMATION RECEIVED FROM THE APPLICABLE UTILITY CO'S. NEITHER THE OWNER NOR ENGINEER ASSUMES ANY RESPONSIBILITY FOR UTILITIES OR STRUCTURES NOT IN THE LOCATION SHOWN PRIOR TO START OF CONSTRUCTION. THE CONTRACTOR'S RESPONSIBILITY REGARDING UTILITIES SHALL BE, AS REQUIRED UNDER SECTION 107.17 OF THE UNIFORM STANDARD SPECIFICATIONS FOR CLARK COUNTY AREA, NEVADA AND AS PROVIDED IN THE SPECIFICATIONS. THE CONTRACTOR SHALL USE EXTREME CAUTION WHEN WORKING OVER OR NEAR EXISTING GAS MAINS AND UNDERGROUND POWER LINES.

3. ALL CONSTRUCTION AND MATERIALS FOR THIS PROJECT SHALL BE IN ACCORDANCE WITH THE "UNIFORM STANDARD SPECIFICATIONS AND STANDARDS DRAWINGS CLARK COUNTY AREA, NEVADA AND CLARK COUNTY SUPPLEMENT TO UNIFORM STANDARD DRAWINGS AND SPECIFICATIONS," LATEST REVISION.

4. 48 HOURS PRIOR TO START OF CONSTRUCTION THE CONTRACTOR SHALL CONTACT:

LAS VEGAS VALLEY WATER DISTRICT	258-7171
NEVADA POWER COMPANY	1-800-227-2600
SPRINT TELEPHONE COMPANY	1-800-227-2600
SOUTHWEST GAS CORPORATION	365-2296
COX COMMUNICATIONS (CABLE CO.)	384-8084

5. THE CONTRACTOR SHALL TAKE ALL PRECAUTIONARY MEASURES NECESSARY TO PROTECT EXISTING IMPROVEMENTS WHICH ARE TO REMAIN IN PLACE FROM DAMAGE, AND ALL SUCH IMPROVEMENTS OR STRUCTURES DAMAGED BY THE CONTRACTOR'S OPERATIONS SHALL BE REPAIRED OR RECONSTRUCTED SATISFACTORY TO THE ENGINEER AT THE EXPENSE OF THE CONTRACTOR.

6. ALL BARRICADING AND TEMPORARY TRAFFIC CONTROL DEVICES OR METHODS USED DURING CONSTRUCTION SHALL BE IN ACCORDANCE WITH THE CLARK COUNTY TRAFFIC CONTROL PLANS.

7. THE QUANTITIES GIVEN IN THE DRAWINGS ARE APPROXIMATE ONLY, BEING GIVEN AS A BASIS FOR THE COMPARISON OF BIDS, AND THE OWNER DOES NOT EXPRESSLY OR BY IMPLICATION, AGREE THAT THE ACTUAL AMOUNT OF WORK WILL CORRESPOND THEREWITH, BUT RESERVES THE RIGHT TO MAKE SUCH ALTERATIONS, DEVIATIONS, ADDITIONS TO OR OMISSIONS FROM THE PLANS AND SPECIFICATIONS, INCLUDING THE RIGHT TO INCREASE OR DECREASE THE QUANTITY OF ANY ITEM OR PORTION OF THE WORK, AS MAY BE DEEMED BY THE OWNER TO BE NECESSARY. ANY SUCH CHANGES WILL BE SET FORTH IN A CONTRACT CHANGE ORDER WHICH WILL SPECIFY, IN ADDITION TO THE WORK TO BE DONE IN CONNECTION WITH THE CHANGE MADE, ADJUSTMENT OF CONTRACT TIME, IF ANY, AND THE BASIS OF COMPENSATION FOR SUCH WORK. A CONTRACT CHANGE ORDER WILL NOT BECOME EFFECTIVE UNTIL APPROVED BY THE OWNER.

8. THE CONTRACTOR SHALL BE RESPONSIBLE FOR THE VERTICAL ADJUSTMENT OF ALL EXISTING SANITARY, WATER AND STORM SEWER MANHOLES TO THE FINAL FINISH GRADES IN ACCORDANCE WITH SECTION 609 OF THE STANDARD SPECIFICATIONS.

9. REMOVAL OR RELOCATION OF POWER POLES, TELEPHONE POLES, JOINTLY-OWNED POLES AND APPURTENANCES WHICH INTERFERE WITH IMPROVEMENTS REQUIRED TO BE CONSTRUCTED UNDER THIS CONTRACT, SHALL BE THE RESPONSIBILITY OF CONTRACTOR.

10. THE CONTRACTOR SHALL BE RESPONSIBLE FOR THE VERTICAL ADJUSTMENT OF ALL TELEPHONE COMPANY MANHOLES TO THE FINAL FINISH GRADES AS SHOWN ON THE CONTRACT DRAWINGS.

11. ALL CONCRETE FOR THIS PROJECT SHALL USE TYPE V CEMENT.

12. ALL SITE GRADING WORK SHALL BE IN STRICT ACCORDANCE WITH THE SOILS REPORT FOR THE SITE. ALL WORK SHALL BE PERFORMED UNDER THE DIRECTION OF A REGISTERED PROFESSIONAL SOILS ENGINEER.

13. SLOPES STEEPER THAN 4:1 AND FINE-GRAINED MATERIALS THAT HAVE BEEN DISTURBED (SANDY AND SILTY MATERIALS), SHOULD BE PROTECTED WITH BURLAP AND OTHER EROSION CONTROL FABRIC/MATERIAL, UNLESS OTHERWISE SPECIFIED BY THE LANDSCAPE DRAWINGS AND SPECIFICATIONS, OTHERWISE SPECIFIED BY THE LANDSCAPE DRAWINGS AND SPECIFICATIONS, OR THE SOILS REPORT.

14. CONTRACTOR SHALL DETERMINE HIS OWN FOOTING OR BASEMENT EXCAVATION QUANTITIES, EVEN THOUGH SHOWN ON ROUGH GRADING PLANS.

CLARK COUNTY FIRE DEPARTMENT GENERAL NOTES

UNIFORM GUIDELINES

INSTALLATION AND SPECIFICATION OF FIRE HYDRANTS

A. ALL WORK SHALL BE DONE IN STRICT ACCORDANCE WITH THE 2005 CLARK COUNTY FIRE CODE, AND THE 2002 EDITION OF THE NATIONAL FIRE PROTECTION ASSOCIATION PAMPHLET #24.

B. ON ANY BUILDING CONSTRUCTION, ACCESSIBLE FIRE HYDRANTS SHALL BE INSTALLED BEFORE COMBUSTIBLE MATERIALS ARE DELIVERED TO THE SITE AND CONSTRUCTION COMMENCES. SAID FIRE HYDRANTS SHALL BE IN GOOD WORKING ORDER WITH THE REQUIRED WATER SUPPLY.

C. IF DURING CONSTRUCTION IT BECOMES NECESSARY TO CLOSE ANY CONTROL VALVE OR PLACE A HYDRANT OUT OF SERVICE, THE CLARK COUNTY FIRE DEPARTMENT MUST BE CONTACTED.

D. PAINTING OF CURBS AND/OR STRIPING OF ASPHALT AREAS AND PROTECTION OF HYDRANTS FROM PHYSICAL INJURY SHALL BE PER THE FIRE HYDRANT INSTALLATION SPECIFICATIONS OF THE FIRE PREVENTION BUREAU.

E. NO FIRE HYDRANT SHALL BE LOCATED WITHIN 25 FEET OF ANY STRUCTURE, OR 5 FEET OF A DRIVEWAY, POWER POLE, LIGHT STANDARD, OR ANY OTHER CONSTRUCTION. FOR WALL, FENCE AND PLANTER LOCATIONS, A PERIMETER AROUND THE HYDRANT MEASURING A MINIMUM OF 3 FEET FROM ITS EXTERIOR SHALL BE MAINTAINED CLEAR OF ALL OBSTRUCTION AT ALL TIMES.

F. AT ALL TIMES DURING CONSTRUCTION SUITABLE EMERGENCY VEHICLE ACCESS ROAD(S) MUST BE MAINTAINED. ROADWAYS MUST BE SMOOTH, COMPACTED AND CAPABLE OF SUPPORTING THE IMPOSED LOADS OF ALL EMERGENCY VEHICLES.

G. PRIOR TO ACCEPTANCE OF ANY FIRE SERVICE MAIN, A SATISFACTORY HYDROSTATIC TEST WITH PIPING JOINTS UNCOVERED MUST BE CONDUCTED. APPROVED PLANS AND A CONTRACTOR'S MATERIALS AND TEST CERTIFICATE MUST BE PROVIDED AT TIME OF INSPECTION. CALL CCFD INSPECTION HOTLINE AT 226-8991 TO SCHEDULE INSPECTIONS.

H. BLUE REFLECTIVE MARKERS MUST BE INSTALLED BEFORE FINAL HYDRANT ACCEPTANCE CAN BE ATTAINED [2005 CLARK COUNTY FIRE CODE, SEC. 901.4.3].

I. APPROVED FIRE HYDRANTS FOR THIS PROJECT ARE:
1. KENNEDY – GUARDIAN MODELS K81A AND K81D.
2. MUELLER – SUPER CENTURION 250 MODEL A-423.
3. CLOW – MEDALLION MODEL F-2546LWD.
4. TROY VALVE – PATRIOT MODEL PTB100N NEVADA HYDRANT.

FIRE DEPARTMENT APPROVAL

APPROVAL BY THE FIRE DEPARTMENT HAVING JURISDICTION IS REQUIRED PRIOR TO OBTAINING FINAL APPROVAL FROM THE LAS VEGAS VALLEY WATER DISTRICT.

QUANTITES

DESCRIPTION	PUBLIC QUANTITY	PRIVATE QUANTITY
2-INCH ASPHALTIC CONCRETE PAVING	SY	1658.56 SY
3-INCH ASPHALTIC CONCRETE PAVING	SY	5269.98 SY
CONCRETE PAVING	SY	194.80 SY
TYPE II GRAVEL	CY	268.28 CY
CURB & GUTTER "L" CURB	LF	309.25 LF
"A" CURB	LF	664.82 SF
CONCRETE VALLEY GUTTER	SF	293.68 SF
4-INCH CONCRETE SIDEWALK	SF	2110.37 SF
6-INCH SEWER (PRIVATE)	LF	137.14 LF
6" X 6" HOUSE CONNECTION	LF	2 EA
SEWER CLEANOUT	LF	2 EA
8" X 6" WYE CONNECTION	LF	1 EA
6-INCH CAP (SAN)	LF	1 EA
2-INCH WATER MAIN	LF	70.24 LF
1-1/2" WATER METER	EA	1 EA
1-1/2" RPPA	EA	1 EA
2" 45° BEND	EA	2 EA
2" CAP (DOM)	EA	1 EA
2" CAP (DOM)	EA	1 EA
8" x 2" TEE	EA	1 EA

NOTE:
THIS QUANTITY ESTIMATE IS FOR BONDING PURPOSES ONLY.
CONTRACTOR TO DETERMINE INDEPENDENT ESTIMATIONS.

LEGEND

DESCRIPTION	EXISTING	PROPOSED
UTILITIES		
B.O. VALVE		
FIRE HYDRANTS		
CLEAN OUT		
GATE VALVE		
METER		
REDUCER		
CAP		
11.25° ELBOW		
22.5° ELBOW		
45° ELBOW		
90° ELBOW		
CROSS		
TEE		
MANHOLES		
ELECTRICAL	E	E
SANITARY SEWER	S	S
STORM DRAIN	D	D
TELEPHONE	T	T
STREET LIGHTS		
100W HPS STLT.		
150W HPS STLT.		
200W HPS STLT.		
250W HPS STLT.		
400W HPS STLT.		
GRADING		
SPOT ELEV.	(12.3±) TC	12.34 TC
SLOPE	(1.2%±)	1.23%
5' CONT.	(2005)	2005
1' CONT.		2007
SITE		
SIGN		
"L" CURB		
"A" CURB		
EDGE OF PVMT.		
WALL		

LINE TYPES: CL OR SECTION LINE; PROPERTY LINE; RIGHT OF WAY LINE; EASEMENT LINE; SAWCUT LINE; FLOW LINE

SHADES: HEAVY AC PAVEMENT; LIGHT AC PAVEMENT; CONCRETE PAVEMENT

SAFETY ALERT
Call Before You Overhead 1-702-227-2929
AVOID HITTING UNDERGROUND TRAFFIC SIGNAL AND STREET LIGHT SYSTEM CONDUITS & IT'S COSTLY
Call before you UnderGround 1-702-455-7511 C.C. TRAFFIC OPERATIONS and 1-702-229-6611 LV AREA COMPUTERIZED TRAFFIC SYS.
Avoid cutting underground utility lines. It's costly.
Call before you Dig 1-800-227-2600

CivilWorks Inc
Engineering with "sensible" solutions tailored to your "specific" needs.
7625 Dean Martin Drive, Suite #101 • Las Vegas, NV 89139-5975
Office #:(702) 876-3474 • Fax #:(702) 876-1323

CARL'S JR. AT MCCARRAN MARKETPLACE @ EASTERN & RUSSELL
PROJECT INFORMATION

OWNER/DEVELOPER: SL INVESTMENTS INC
2950 E FLAMINGO SUITE H
LAS VEGAS, NEVADA 89119
PH: 702-734-2276
CLARK COUNTY, NEVADA

	DATE	19apr07
PROJ. No.	62007000.00	
PROJ. ENGR.	ALISON HAYES	ENGR.	LBF/ASH
PROJ. MGR.	ALISON HAYES	ENGR CHK.	ASH
REVISIONS		

PRINTS REQUIRE ENGINEER'S SEAL AND SIGN FOR PROOF OF VALIDITY

PROFESSIONAL ENGINEER - STATE OF NEVADA
ALISON HAYES
Exp: 06/30/07
CIVIL
No. 16010
4/19/07

GENERAL NOTES

SHEET # 1.02
SHEET 2 OF 5

FILE # 1

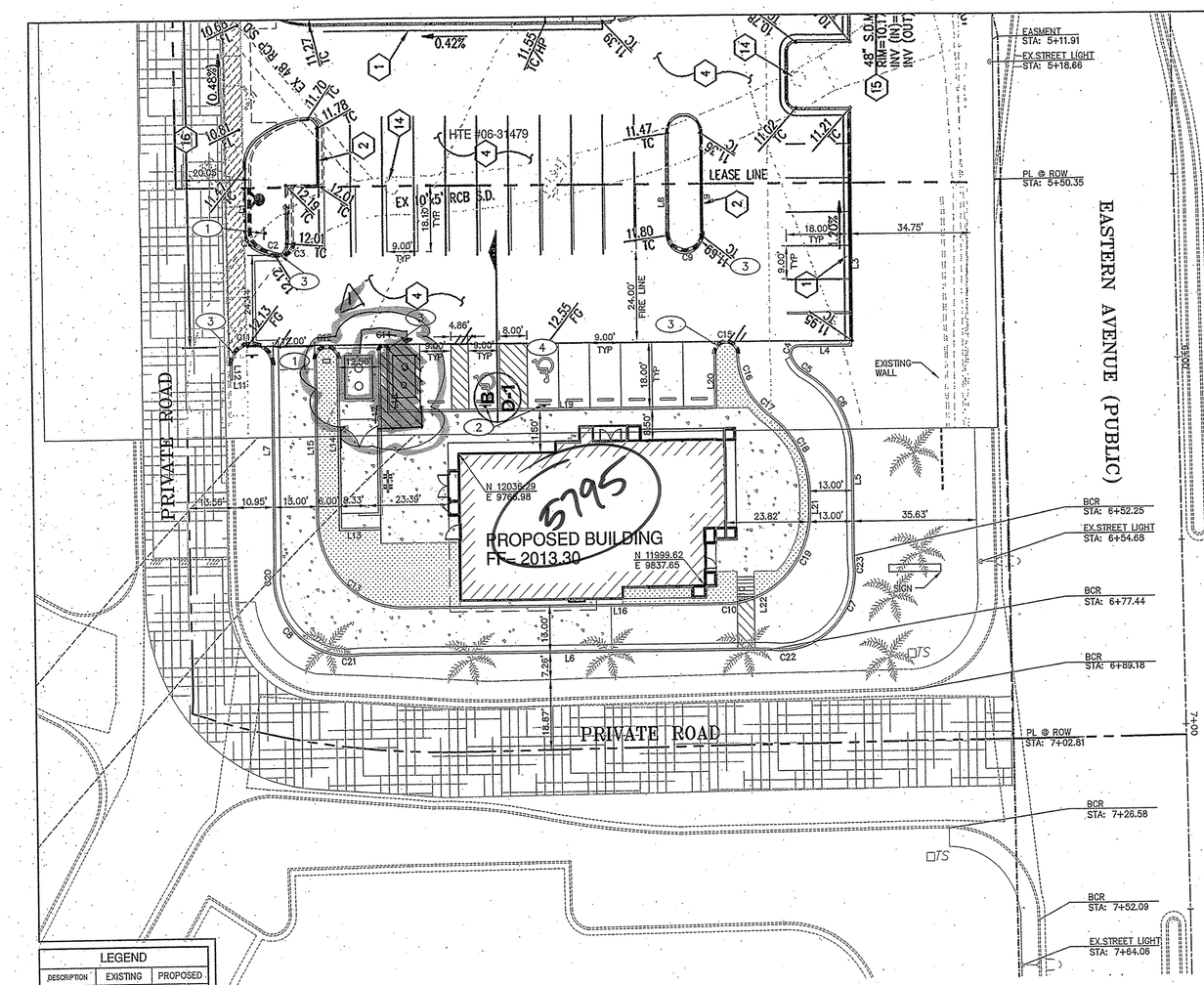

LINE TABLE		
LINE	LENGTH	BEARING
L1	11.81'	S00°00'00"E
L2	14.88'	N00°00'00"W
L3	45.08'	S00°00'00"E
L4	15.39'	N90°00'00"W
L5	27.47'	S00°00'00"E
L6	116.46'	N90°00'00"W
L7	53.94'	N00°00'00"E
L8	13.37'	S00°00'00"E
L9	13.37'	N00°00'00"E
L10	0.50'	S00°00'00"E
L11	0.50'	N90°00'00"E
L12	3.81'	N00°45'47"W
L13	9.00'	N90°00'00"W
L14	46.87'	N00°00'00"W
L15	43.50'	S00°00'00"E
L16	92.73'	N90°00'00"E
~~L17~~	~~26.56'~~	~~N90°00'00"W~~
~~L18~~	~~17.10'~~	~~S00°00'00"E~~
L19	~~95.00'~~	S90°00'00"E
L20	15.00'	N00°00'00"E
L21	5.58'	S00°00'00"E
L22	0.53'	S00°00'00"E
~~L23~~	~~10.00'~~	~~S90°00'00"E~~
~~L24~~	~~7.00'~~	~~S00°00'00"E~~

CURVE TABLE				
CURVE	LENGTH	RADIUS	DELTA	TANGENT
C1	4.39'	4.50'	55°57'03"	2.39'
C2	6.72'	15.00'	25°39'00"	3.41'
C3	5.14'	3.00'	98°13'43"	3.47'
C4	3.95'	2.00'	113°12'04"	3.03'
C5	6.26'	9.50'	37°44'23"	3.26'
C6	27.12'	25.50'	60°56'14"	15.00'
C7	38.43'	21.50'	102°24'07"	26.74'
C8	38.20'	21.50'	101°48'42"	26.46'
C9	14.55'	4.63'	180°00'00"	0'
C10	3.59'	24.50'	8°23'14"	1.80'
C11	18.00'	5.73'	180°00'00"	0'
C12	9.42'	3.00'	180°00'00"	0'
C13	38.44'	24.50'	89°53'51"	24.46'
~~C14~~	~~3.09'~~	~~0.99'~~	~~180°00'00"~~	~~0'~~
C15	9.38'	2.99'	180°00'00"	0'
C16	10.84'	20.47'	30°20'11"	5.55'
C17	10.47'	25.47'	23°33'50"	5.31'
C18	23.35'	24.53'	54°32'58"	12.65'
C19	29.77'	24.53'	69°32'24"	17.03'
C20	2.07'	20.00'	5°55'54"	1.04'
C21	2.05'	20.00'	5°52'46"	1.03'
C22	2.16'	20.00'	6°12'04"	1.08'
C23	2.16'	20.00'	6°12'04"	1.08'

LEGEND

DESCRIPTION	EXISTING	PROPOSED
UTILITIES		
B.O. VALVE		
FIRE HYDRANTS		
CLEAN OUT		
GATE VALVE		
METER		
REDUCER		
CAP		
11.25° ELBOW		
22.5° ELBOW		
45° ELBOW		
90° ELBOW		
CROSS		
TEE		
MANHOLES		
ELECTRICAL	E	E
SANITARY SEWER	S	S
STORM DRAIN	D	D
TELEPHONE	T	T
STREET LIGHTS		
100W HPS STLT.		
150W HPS STLT.		
200W HPS STLT.		
250W HPS STLT.		
400W HPS STLT.		
GRADING		
SPOT ELEV.	(12.3±) TC	12.34 TC
SLOPE	(1.2%±)	1.23%
5' CONT.	(2005)	2005
1' CONT.		2007
SITE		
SIGN		
"L" CURB		
"A" CURB		
EDGE OF PVMT.		
WALL		
LINE TYPES		
CL OR SECTION LINE		
PROPERTY LINE		
RIGHT OF WAY LINE		
EASEMENT LINE		
SANCUT LINE		
FLOW LINE		
SHADES		
HEAVY AC PAVEMENT		
LIGHT AC PAVEMENT		

N

GRAPHIC SCALE

20 0 10 20 40 80

(IN FEET)
1 INCH = 20 ft

LEGEND AND ABBREVIATIONS

(41)	EXISTING CONTOUR LINES
41	PROPOSED CONTOUR LINES
	GRADE BREAK
	FLOW LINE
	CUT AND FILL
00.00	PROPOSED ELEVATION
	DIRECTION OF FLOW
4 POSITION ON SHEET	DETAIL AND/OR SECTION REFERENCE
C-4 SHEET NUMBER	
	CENTERLINE OF ROADWAY
	PROPERTY LINE

ABBREVIATIONS:

AC	ASPHALTIC CONCRETE	INV	INVERT
BCR	BEGINNING OF CURB RETURN	LC	L-CURB
C	CURVE	L	LINE
CL	CENTERLINE	LT	LEFT
DI	DROP INLET	NAP	NOT A PART
DWY	DRIVEWAY	NTS	NOT TO SCALE
EC	END OF CURVE	PC	POINT OF CURVATURE
EP	EDGE OF PAVEMENT	PL	PROPERTY LINE
FC	FACE OF CURB	RT	RIGHT
FF	FINISH FLOOR	R/W	RIGHT-OF-WAY
FG	FINISH GRADE	STA	STATION
FS	FINISHED SURFACE	SVL	SIGHT VISIBILITY
GB	GRADE BREAK	TC	TOP OF CURB
HP	HIGH POINT	TW	TOP OF WALL
		TYP	TYPICAL
		UG	U-GUTTER
		VG	VALLEY GUTTER

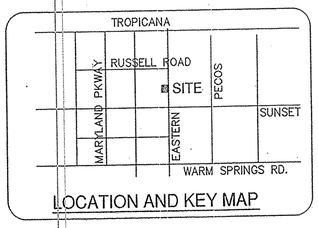

LOCATION AND KEY MAP

BASIS OF BEARINGS

SOUTH 00°34'30" EAST BEING THE EAST LINE OF THE SOUTHEAST QUARTER (SE 1/4) OF THE NORTHEAST QUARTER (NE 1/4) OF SECTION 35, TOWNSHIP 21 SOUTH, RANGE 61 EAST, M.D.M., CLARK COUNTY, NEVADA AS SHOWN BY MAP THEREOF ON FILE IN BOOK 113, PAGE 71 OF PLATS IN THE CLARK COUNTY RECORDERS OFFICE, CLARK COUNTY, NEVADA.

BENCHMARK

CLARK COUNTY BENCHMARK: 8C11 25SWS 1998

RIVIT AND ROUND ALUMINUM PLATE IN TOP OF CURB, NORTHEAST CORNER OF EASTERN AVE. AND RUSSELL RD. NEAR THE PC OF EASTERN AVE.

ELEV. = 611.619 (METRIC)
2006.62 (US SURVEY FEET)

FIRE ACCESS LEGEND:

PAINTED CURB OR PAVEMENT

FIRE TRUCK ACCESIBLE ROUTE

LEGEND:

CONCRETE SIDEWALKS

LANDSCAPE AREA

NO PARKING AREA

TRAFFIC NOTES:

1. PLACE R1-1 "STOP" SIGN (30"x30") PER CCAUSD #249A [SEE DETAIL THIS SHEET]
2. PLACE "HANDICAPPED PARKING" SIGN PER CCAUSD #249A [SEE DETAIL THIS SHEET]
3. RED PAINTED CURB
4. PAINTED HANDICAP PARKING SYMBOL

STOP

R1-1 SIGN
NTS

RESERVED FOR

HANDICAPPED PARKING SIGN
NTS

NOISE LEVEL REDUCTION OF 25 DECIBELS REQUIRED

07-19993
COUNTY OF CLARK
ZONING DIVISION
APPROVED
BY Gomez 9/10/07
DATE

CLARK COUNTY DEVELOPMENT SERVICES
THIS IS A TRUE AND EXACT COPY OF THE ORIGINAL DOCUMENT ON FILE IN THIS OFFICE.
SIGNED Gomez DATE 9/10/07

SAFETY ALERT
Call Before You Overhead 1-702-227-2929

AVOID HITTING UNDERGROUND TRAFFIC SIGNAL AND STREET LIGHT SYSTEM CONDUITS. IT'S COSTLY!
Call before you UnderGround
C.C. TRAFFIC OPERATIONS 1-702-455-7511
AND
LV AREA COMPUTERIZED TRAFFIC SYS. 1-702-229-6611

Avoid cutting underground utility lines. It's costly!
Call before you Dig 1-800-227-2600

CIVIL WORKS INC
Engineering with "sensible" solutions tailored to your "specific" needs.
7625 Dean Martin Drive, Suite #101 • Las Vegas, NV 89139-5975
Office #:(702) 876-3474 • Fax #:(702) 876-1323

CARL'S JR. AT MCCARRAN MARKETPLACE @ EASTERN & RUSSELL
PROJECT INFORMATION

OWNER/DEVELOPER: SL INVESTMENTS INC.
2850 E FLAMINGO SUITE H
LAS VEGAS, NEVADA 89119
PH: 702-734-2276
CLARK COUNTY, NEVADA

	DATE	09/10/07
PROJ. ENGR.	ALISON HAYES	TECHN.	JP / AS
PROJ. MGR.	ALISON HAYES	ENGR. CHK.	ADH

REVISIONS: 1 Revise Loading Area

PRINTS REQUIRE ENGINEER'S SEAL AND SIGN FOR PROOF OF VALIDITY

PROFESSIONAL ENGINEER STATE OF NEVADA
ALISON HAYES
Exp: 06/30/09
CIVIL
No. 16010
7/9/07

HORIZONTAL CONTROL PLAN

SHEET # C 2.01
SHEET 3 OF 6

FILE # 07-24524

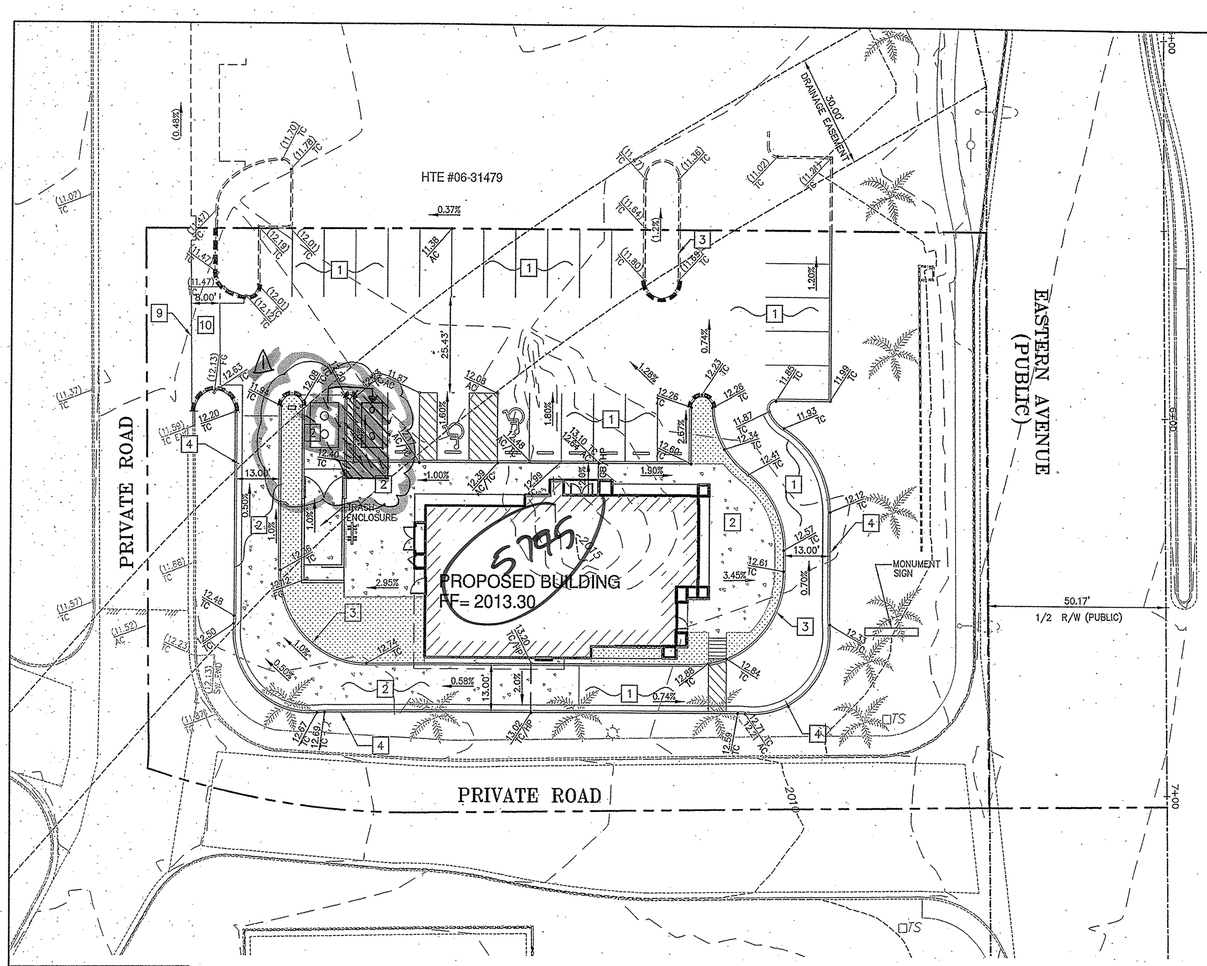

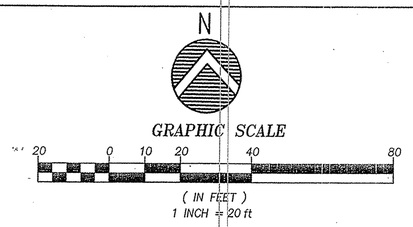

LEGEND AND ABBREVIATIONS

CONCRETE HATCH
LANDSCAPE AREA

AC ASPHALTIC CONCRETE
CL CENTERLINE
FF FINISH FLOOR
GB GRADE BREAK
HP HIGH POINT
LC L-CURB
NTS NOT TO SCALE
PL PROPERTY LINE
R/W RIGHT-OF-WAY
TC TOP OF CURB
TYP TYPICAL
UG U-GUTTER
VG VALLEY GUTTER

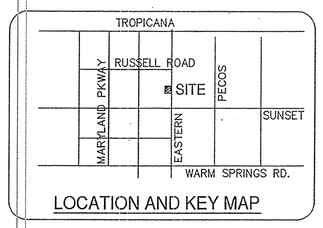

LOCATION AND KEY MAP

CONSTRUCTION NOTES:

– ALL CONSTRUCTION TO BE DONE IN ACCORDANCE WITH "CLARK COUNTY AREA UNIFORM STANDARD DRAWINGS (C.C.A.U.S.D.)" LATEST EDITION AND/OR REGULATING ENTITY HAVING JURISDICTION.
– NOT ALL NOTES USED ON THIS SHEET –

1. CONSTRUCT AC PAVEMENT PER DETAIL THIS SHEET
2. CONSTRUCT CONCRETE PAVEMENT PER DETAIL THIS SHEET
3. CONSTRUCT 'A' TYPE CURB PER C.C.A.U.S.D. No. 219.
4. CONSTRUCT 'L' TYPE CURB PER C.C.A.U.S.D. No. 216.
5. CONSTRUCT CONCRETE SIDEWALK PER C.C.A.U.S.D. No. 234.
6. CONSTRUCT 2' CONCRETE VALLEY GUTTER PER DETAIL THIS SHEET
7. CONSTRUCT CASE 2 SIDEWALK RAMP PER C.C.A.U.S.D. No. 235.
8. CONSTRUCT CASE 3 SIDEWALK RAMP PER C.C.A.U.S.D. No. 235.
9. CONSTRUCT 8' WIDE CROSS GUTTER PER C.C.A.U.S.D. No. 228.
10. CONSTRUCT 24' COMMERCIAL DRIVEWAY PER C.C.A.U.S.D. No. 225.

BASIS OF BEARINGS

SOUTH 00°41'30" EAST BEING THE EAST LINE OF THE SOUTHEAST QUARTER (SE 1/4) OF THE NORTHEAST QUARTER (NE 1/4) OF SECTION 35, TOWNSHIP 21 SOUTH, RANGE 61 EAST, M.D.M., CLARK COUNTY, NEVADA AS SHOWN BY MAP THEREOF ON FILE IN BOOK 113, PAGE 71 OF PLATS IN THE CLARK COUNTY RECORDERS OFFICE, CLARK COUNTY, NEVADA.

BENCHMARK

CLARK COUNTY BENCHMARK: 8C11 25SWS 1998

RIVIT AND ROUND ALUMINUM PLATE IN TOP OF CURB, NORTHEAST CORNER OF EASTERN AVE. AND RUSSELL RD. NEAR THE PC OF EASTERN AVE.

ELEV. = 611.619 (METRIC)
2006.62 (US SURVEY FEET)

GEOTECHNICAL NOTE:

CONTRACTOR TO ENSURE POSITIVE DRAINAGE. NO PONDING ALLOWED. CONTRACTOR TO FOLLOW RECOMMENDATIONS AS OUTLINE IN THE PROJECT GEOTECHNICAL REPORT, INCLUDING BUT NOT LIMITED TO EXCAVATION, GRADING AND COMPACTION. REFER TO THE REPORT PREPARED BY:

MACTEC
DATE DECEMBER 9, 2003
PHASE 1 ENVIRONMENTAL SITE ASSESSMENT

GRADING NOTES:

1. SLOPES 4:1 OR STEEPER AND FINE-GRAINED MATERIALS THAT HAVE BEEN DISTURBED (SANDY AND SILTY MATERIALS) SHOULD BE PROTECTED WITH BURLAP OR OTHER EROSION CONTROL FABRIC/MATERIAL, UNLESS OTHERWISE SPECIFIED BY LANDSCAPE DRAWINGS AND SPECIFICATIONS OR THE SOILS REPORT.

2. CONTRACTOR SHALL DETERMINE HIS OWN FOOTING OR BASEMENT EXCAVATION QUANTITIES, EVEN THOUGH SHOWN ON ROUGH GRADING PLANS. ADDITIONALLY, STRUCTURE BACKFILL COSTS SHOULD BE INCLUDED IN THE COST OF THE STRUCTURE, UNLESS OTHERWISE SPECIFIED IN THE CONTRACT DOCUMENTS.

3. CONTRACTOR SHALL NOTIFY CIVILWORKS ENGINEERING WITHIN 24 HOURS OF OMISSIONS AND ERRORS DISCOVERED ON PLANS. CIVIL WORKS WILL NOT BE RESPONSIBLE FOR ANY "CORRECTIVE" WORK DONE BY OTHERS.

4. CONTRACTOR TO ENSURE POSITIVE DRAINAGE. NO PONDING ALLOWED. CONTRACTOR TO FOLLOW RECOMMENDATIONS AS OUTLINED IN THE PROJECT GEOTECHNICAL REPORT, INCLUDING BUT NOT LIMITED TO EXCAVATION, GRADING AND COMPACTION. REFER TO THE REPORT PREPARED BY:

FILL OUT INFORMATION ON THE REPORT HERE:
COMPANY: MACTEC ENGINEERING AND CONSULTING, INC.
DATE: DECEMBER 9, 2003
WORK ORDER # 4400-03-2007

GEOTECHNICAL NOTE:

A GEOLOGIST OR GEOTECHNICAL ENGINEER SHALL BE ON SITE DURING EXCAVATION AND MASS GRADING OPERATIONS TO EXAMINE THE SOIL CHARACTERISTICS AND GEOLOGICAL CONDITIONS ENCOUNTERED, AND TO PROVIDE PROFESSIONAL ADVICE TO THE OWNER IN THE EVENT THAT UNANTICIPATED SOIL PROBLEMS ARISE AND/OR SUBSURFACE SITE CONDITIONS ARE FOUND TO BE SIGNIFICANTLY DIFFERENT THAN DEFINED BY PRE-DESIGN EXPLORATION AND TESTING.

FEMA FLOOD ZONE INFORMATION

THE SUPPORT SITE LOCATED WITHIN "SHADED" ZONE X" AS SHOWN ON F.I.R.M. COMMUNITY-PANEL NUMBER 320030(2580)E, REVISED SEPTEMBER 2~~7~~ 2002, REVISED TO REFLECT A LOMR DATED JUNE 19, 2003, AND FIRM COMMUNITY PANEL NUMBER 320030 (2580), REVISED TO REFLECT A LOMR DATED AUGUST 13, 2003. ZONE X" IS DETERMINED TO BE OUTSIDE OF THE 0.2% ANNUAL CHANGE FLOOD EVENT.

ZONE X: AREAS OF 500 YEAR FLOOD; AREA OF 100 YEAR FLOOD WITH AVERAGE DEPTHS OF LESS THAN 1 FOOT OR WITH DRAINAGE AREAS LESS THAN 1 SQUARE MILE; AND AREAS PROTECTED BY LEVEES FROM 100 YEAR FLOOD.

07-19993
CLARK COUNTY
DEVELOPMENT SVCS. DEPT.
SEP 12 2007
APPROVED BY: BMS/
☐A ☐S ☐M ☐P ☐E

GRADING PLAN CERTIFICATION

Alison Hayes 7/9/07
NAME: ALISON D. HAYES PE #16010 DATE:

CERTIFY THAT THIS GRADING PLAN IS IN CONFORMANCE WITH APPROVED DRAINAGE STUDY FOR THIS SITE ON FILE AT CLARK COUNTY FOR THIS PROJECT. HTE # 04-57005

DDS 9/12/07

CLARK COUNTY DEPARTMENT OF DEVELOPMENT SERVICES

ACCEPTANCE OF PLANS FOR FILING:

BY: [signature] DATE: 7.23.07

ACCEPTANCE OF THESE PLANS FOR FILING SHALL NOT BE CONSTRUED TO BE A PERMIT FOR, OR AN APPROVAL OF, ANY VIOLATION OF ANY OF THE PROVISIONS OF THE STATE OR COUNTY LAWS AND/OR SPECIFICATIONS. CLARK COUNTY SHALL BE HELD FREE FROM DAMAGES WHICH MAY RESULT FROM THE CONSTRUCTION OF THE IMPROVEMENTS FROM THE ENGINEERING DESIGN DEPICTED HEREIN. NOTE: POWER POLES AND/OR OTHER EXISTING FACILITIES NOT IN PROPER LOCATION, BASED ON PROPOSED IMPROVEMENTS SHOWN HEREON WILL BE RELOCATED AT NO EXPENSE TO CLARK COUNTY.

NOTE: POWER POLES AND/OR OTHER EXISTING FACILITIES NOT IN PROPER LOCATION BASED ON PROPOSED IMPROVEMENTS SHOWN HEREON WILL BE RELOCATED AT NO EXPENSE TO CLARK COUNTY.

CLARK COUNTY DEVELOPMENT SERVICES
THIS IS A TRUE AND EXACT COPY OF THE ORIGINAL DOCUMENT ON FILE IN THIS OFFICE.

SIGNED [signature] DATE 9/10/07

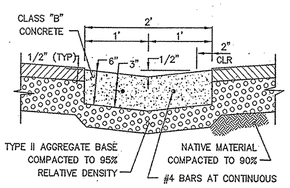

2' VALLEY GUTTER
N.T.S.

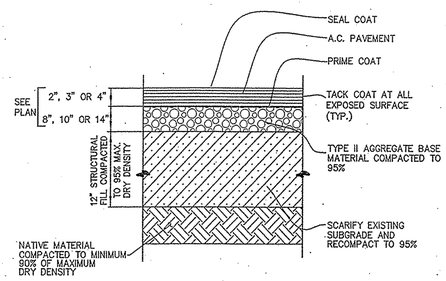

TYPICAL PAVING SECTION
N.T.S.

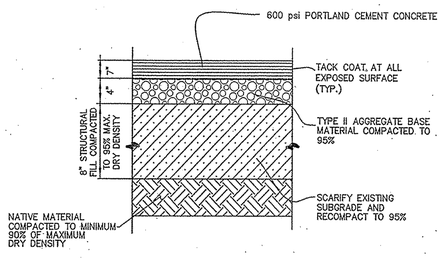

TYPICAL CONCRETE PAVING SECTION
N.T.S.

QUANTITES

DESCRIPTION	PUBLIC QUANTITY	PRIVATE QUANTITY
2-INCH ASPHALTIC CONCRETE PAVING	SY	1658.56 SY
3-INCH ASPHALTIC CONCRETE PAVING	SY	5269.98 SY
CONCRETE PAVING	SY	194.80 SY
TYPE II GRAVEL	CY	268.28 CY
CURB & GUTTER "L" CURB	LF	309.25 LF
"A" CURB	LF	664.82 SF
CONCRETE VALLEY GUTTER	SF	293.68 SF
4-INCH CONCRETE SIDEWALK	SF	2110.37 SF
6-INCH SEWER (PRIVATE)	LF	137.14 LF
6" X 6" HOUSE CONNECTION	LF	2 EA
SEWER CLEANOUT	LF	2 EA
8" X 6" WYE CONNECTION	LF	1 EA
6-INCH CAP (SAN)	LF	1 EA
2-INCH WATER MAIN	LF	70.24 LF
1-1/2" WATER METER	EA	1 EA
1-1/2" RPPA	EA	1 EA
2" 45° BEND	EA	2 EA
2" CAP (DOM)	EA	1 EA
8" x 2" TEE	EA	1 EA

NOTE:
THIS QUANTITY ESTIMATE IS FOR BONDING PURPOSES ONLY. CONTRACTOR TO DETERMINE INDEPENDENT ESTIMATIONS.

NOISE LEVEL REDUCTION OF 25 DECIBELS REQUIRED

07-19993
COUNTY OF CLARK
ZONING DIVISION
APPROVED
BY [signature] 9/10/07
DATE

LEGEND

DESCRIPTION	EXISTING	PROPOSED
UTILITIES		
B.O. VALVE		
FIRE HYDRANTS		
CLEAN OUT		
GATE VALVE		
METER		
REDUCER		
CAP		
11.25° ELBOW		
22.5° ELBOW		
45° ELBOW		
90° ELBOW		
CROSS		
TEE		
MANHOLES		
ELECTRICAL	E	E
SANITARY SEWER	S	S
STORM DRAIN	D	D
TELEPHONE	T	T
STREET LIGHTS		
100W HPS ST.LT.		
150W HPS ST.LT.		
200W HPS ST.LT.		
250W HPS ST.LT.		
400W HPS ST.LT.		
GRADING		
SPOT ELEV.	(12.34) TC	12.34 TC
SLOPE	(1.2%)	1.23%
5' CONT.	(2005)	2005
1' CONT.		2007
SITE		
SIGN		
"L" CURB		
"A" CURB		
EDGE OF PVMT.		
WALL		
LINE TYPES		
CL OR SECTION LINE		
PROPERTY LINE		
RIGHT OF WAY LINE		
EASEMENT LINE		
SAWCUT LINE		
FLOW LINE		
SHADES		
HEAVY AC PAVEMENT		
LIGHT AC PAVEMENT		
CONCRETE PAVEMENT		

CIVILWORKS INC
Engineering with "sensible" solutions tailored to your "specific" needs.
7625 Dean Martin Drive, Suite #101 • Las Vegas, NV 89139-5975
Office #:(702) 876-3474 • Fax #:(702) 876-1323

CARL'S JR. AT MCCARRAN MARKETPLACE @ EASTERN & RUSSELL
PROJECT INFORMATION

OWNER/DEVELOPER: SL INVESTMENTS INC
2950 E FLAMINGO SUITE H
LAS VEGAS, NEVADA 89119
PH: 702-734-2276
CLARK COUNTY, NEVADA

		DATE
PROJ. No.	6300/03.00	09/24/07
PROJ. ENGR.	ALISON HAYES	
PROJ. MGR.	ALISON HAYES	
REVISIONS	Revise Loading Area	

PRINTS REQUIRE ENGINEER'S SEAL AND SIGN FOR PROOF OF VALIDITY

PROFESSIONAL ENGINEER ALISON HAYES Exp: 06/30/09 CIVIL No. 16010 STATE OF NEVADA
7/9/07

GRADING PLAN

SHEET #: C 3.01
SHEET 4 OF 6

FILE #: 07-24524

SAFETY ALERT
Call Before You Overhead 1-702-227-2929
AVOID HITTING UNDERGROUND TRAFFIC SIGNAL AND STREET LIGHT SYSTEM CONDUITS. IT'S COSTLY!
Call before you UnderGround 1-702-455-7511 C.C. TRAFFIC OPERATIONS 1-702-229-6611 LV AREA COMPUTERIZED TRAFFIC SYS.
Avoid cutting underground utility lines. It's costly.
Call before you Dig 1-800-227-2600

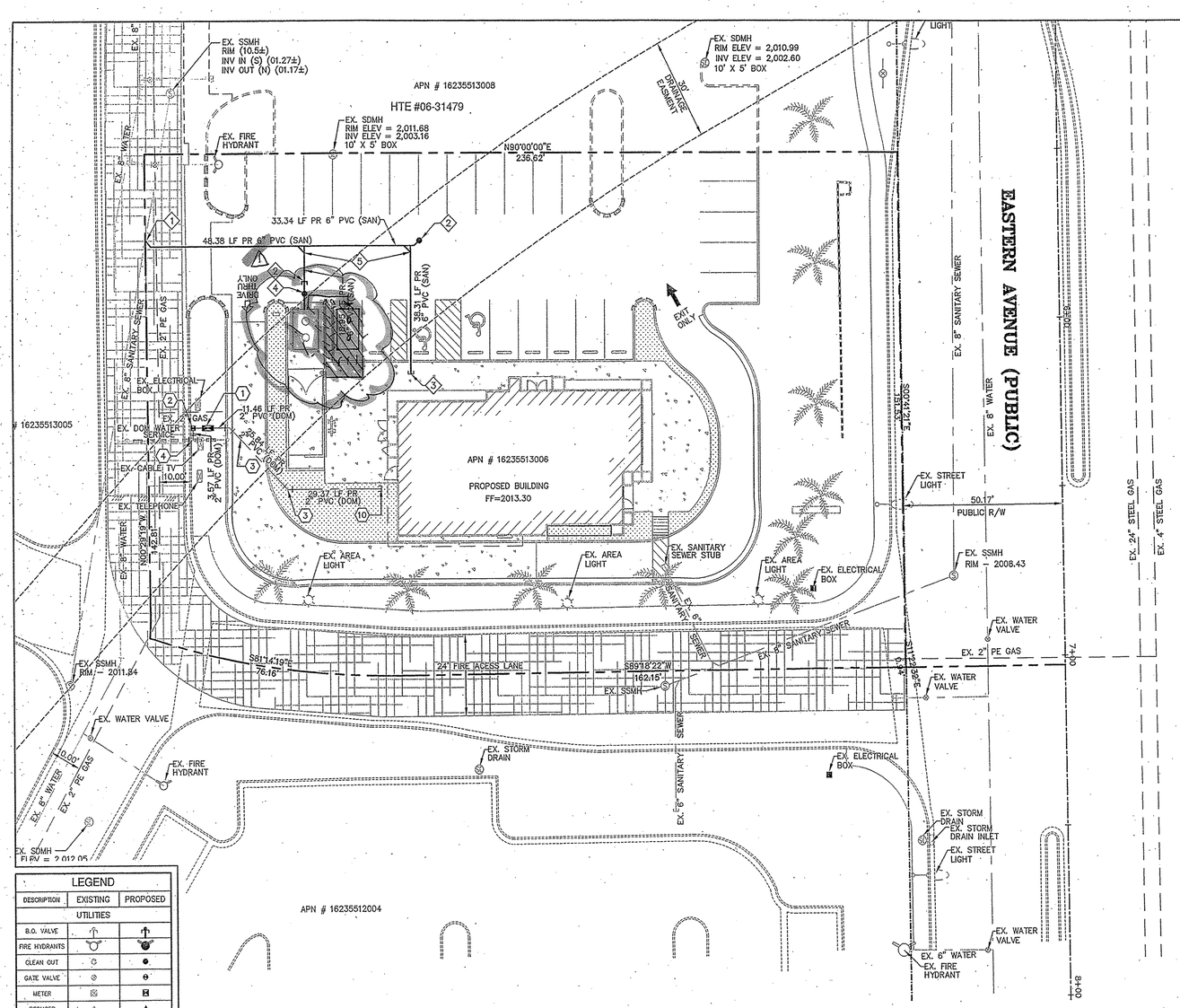

LEGEND

DESCRIPTION	EXISTING	PROPOSED
UTILITIES		
B.O. VALVE		
FIRE HYDRANTS		
CLEAN OUT		
GATE VALVE		
METER		
REDUCER		
CAP		
11.25° ELBOW		
22.5° ELBOW		
45° ELBOW		
90° ELBOW		
CROSS		
TEE		
MANHOLES		
ELECTRICAL	Ⓔ	Ⓔ
SANITARY SEWER	Ⓢ	Ⓢ
STORM DRAIN	Ⓓ	Ⓓ
TELEPHONE	Ⓣ	Ⓣ
STREET LIGHTS		
100W HPS STLT.		
150W HPS STLT.		
200W HPS STLT.		
250W HPS STLT.		
400W HPS STLT.		
GRADING		
SPOT ELEV.	(12.3±) TC	12.34 TC
SLOPE	(1.2%±)	1.23%
.5' CONT.	(2005)	2005
1' CONT.		2007
SITE		
SIGN		
"L" CURB		
"A" CURB		
EDGE OF PVMT.		
WALL		
LINE TYPES		
CL OR SECTION LINE		
PROPERTY LINE		
RIGHT OF WAY LINE		
EASEMENT LINE		
SAWCUT LINE		
FLOW LINE		
SHADES		
HEAVY AC PAVEMENT		
LIGHT AC PAVEMENT		
CONCRETE PAVEMENT		

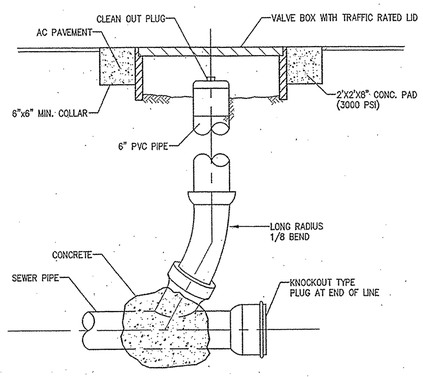

CLEANOUT DETAIL

N.T.S.

FIRE FLOW CALCULATIONS

BASED ON:

SQUARE FOOTAGE:	3,198
LARGEST AREA BETWEEN SEPARATION WALL:	N/A
BUILDING HEIGHT:	24'-0"
NUMBER OF STORIES:	1
TYPE OF CONSTRUCTION:	V-B
EXPOSURES:	2
SPRINKLER SYSTEM:	NO
OCCUPANCY:	A-2
ROOF CONSTRUCTION:	BUILT-UP ROOF
FLOW REQUIRED @ 20 PSI RESIDUAL:	1,500
MAX. STORAGE HEIGHT:	N/A

EX. STATIC WATER PRESSURE IS 81.5± psi IN STREET.

N

GRAPHIC SCALE

20 0 10 20 40 80

(IN FEET)
1 INCH = 20 ft

LEGEND AND ABBREVIATIONS

- (41) — EXISTING CONTOUR LINES
- 41 — PROPOSED CONTOUR LINES
- GRADE BREAK
- FLOW LINE
- 00.00 — CUT AND FILL PROPOSED ELEVATION
- DIRECTION OF FLOW
- 4 / C-4 — POSITION ON SHEET / SHEET NUMBER — DETAIL AND/OR SECTION REFERENCE
- CENTERLINE OF ROADWAY
- PROPERTY LINE
- CONCRETE HATCH
- ADA ACCESS

AC	ASPHALTIC CONCRETE	INV	INVERT
BCR	BEGINNING OF CURB RETURN	LC	L-CURB
CL	CENTERLINE	LT	LEFT
DI	DROP INLET	NAP	NOT A PART
DWY	DRIVEWAY	NTS	NOT TO SCALE
EC	END OF CURVE	PC	POINT OF CURVATURE
EP	EDGE OF PAVEMENT	PL	PROPERTY LINE
FC	FACE OF CURB	RT	RIGHT
FF	FINISH FLOOR	R/W	RIGHT-OF-WAY
FG	FINISH GRADE	TC	TOP OF CURB
FS	FINISHED SURFACE	TW	TOP OF WALL
GB	GRADE BREAK	TYP	TYPICAL
HP	HIGH POINT	UG	U-GUTTER
		VG	VALLEY GUTTER

WATER CONSTRUCTION NOTES:

– ALL WATER CONSTRUCTION TO BE DONE IN ACCORDANCE WITH "UNIFORM DESIGN AND CONSTRUCTION STANDARDS FOR WATER DISTRIBUTION SYSTEMS (U.D.A.C.S.)" LATEST EDITION.
– NOT ALL NOTES USED ON THIS SHEET –

1. INSTALL 1-1/2" RPPA PER U.D.A.C.S. PLATE No. 11A.
2. INSTALL 1-1/2" WATER SERVICE & METER PER U.D.A.C.S. PLATE No. 1D.
3. INSTALL 45° BEND W/THRUST BLOCK (SAME SIZE AS PIPE) PER U.D.A.C.S. PLATE No. 5.
4. INSTALL TEE (SAME SIZE AS PIPES).
5. INSTALL GATE VALVE (SAME SIZE AS PIPE).
6. INSTALL IN-LINE GATE VALVE (SAME SIZE AS PIPE) W/ANCHOR BLOCK PER U.D.A.C.S. PLATE No. 3.
7. INSTALL REDUCER (SAME SIZE AS PIPES) W/ANCHOR BLOCK PER U.D.A.C.S. PLATE No. 3.
8. INSTALL CAP (SAME SIZE AS PIPE).
9. STUB & CAP WATER SERVICE. REFER TO PLUMBING PLANS FOR CONTINUATION.
10. STUB & CAP WATER SERVICE. REFER TO LANDSCAPING/ IRRIGATION PLANS FOR CONTINUATION.

SEWER CONSTRUCTION NOTES:

-- NOT ALL NOTES USED ON THIS SHEET –

1. INSTALL SEWER LATERAL PER SD-17
2. INSTALL SEWER CLEAN-OUT PER DETAIL SHEET C-7
3. INSTALL SANITARY SEWER CAP
4. PROPOSED GREASE INTERCEPTOR LOCATION. REFER TO PLUMBING PLANS FOR SPECIFICATIONS.
5. INSTALL 6"X 6" HOUSE CONNECTION

NOTE:

ALL SEWER/STORM DRAINS CROSSING WATER LINES MUST CONFORM TO SECTION 2.19 OF UNIFORM DESIGN AND CONSTRUCTION STANDARD FOR WATER DISTRIBUTION SYSTEMS (U.D.A.C.S.) FOR WATER AND STORM DRAIN CROSSING AND CLEARANCES. ESN.064 REV. 06/01/04

NOTICE: POINT OF CONNECTION

CONTRACTOR SHALL NOTIFY ENGINEER PRIOR TO CONSTRUCTION ACTIVITIES AND CONSTRUCTION OF SANITARY SEWER AND SEWER LATERALS OF ALL INVERT ELEVATIONS. ONCE INVERT INFORMATION IS RECEIVED, THE SLOPE AND INVERTS WILL BE REVISED ACCORDINGLY. IF THE CONTRACTOR DOES NOT PROVIDE THE INFORMATION, THE ENGINEER WILL NOT BE RESPONSIBLE FOR THE SANITARY SEWER DESIGN.

NOTE:

INSTALL PIPELINE MARKER BALLS IN TRENCH ABOVE EACH HORIZONTAL ELBOW FITTING, PER UDACS PLATE NO. 27.

CLARK COUNTY DEVELOPMENT SERVICES
THIS IS A TRUE AND EXACT COPY OF THE ORIGINA
DOCUMENT ON FILE IN THIS OFFICE.

SIGNED _____ DATE 9/14/07

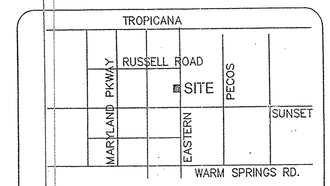

LOCATION AND KEY MAP

BASIS OF BEARINGS

SOUTH 00°03'41"30" EAST BEING THE EAST LINE OF THE SOUTHEAST QUARTER (SE 1/4) OF THE NORTHEAST QUARTER (NE 1/4) OF SECTION 35, TOWNSHIP 21 SOUTH, RANGE 61 EAST, M.D.M., CLARK COUNTY, NEVADA AS SHOWN BY MAP THEREOF ON FILE IN BOOK 113, PAGE 71 OF PLATS IN THE CLARK COUNTY RECORDERS OFFICE, CLARK COUNTY, NEVADA.

BENCHMARK

CLARK COUNTY BENCHMARK: 8C11 25SWS 1998

RIVIT AND ROUND ALUMINUM PLATE IN TOP OF CURB, NORTHEAST CORNER OF EASTERN AVE. AND RUSSELL RD. NEAR THE PC OF EASTERN AVE.

ELEV. = 611.619 (METRIC)
2005.62 (US SURVEY FEET)

NOTE:

CONTRACTOR TO VERIFY UTILITY STUB LOCATIONS AND SIZE WITH PLUMBING PLANS PRIOR TO INSTALLATION OF NEW UTILITIES. CONTRACTOR SHALL LOCATE EXISTING UTILITIES AND VERIFY UTILITY CONNECTION LOCATIONS ANY DISCREPENCIES SHALL BE COORDINATED WITH THE OWNER, ARCHITECT AND ENGINEER PRIOR TO CONSTRUCTION.

NOTE

CIVILWORKS, INC. ASSUMES NO RESPONSIBILITY FOR EXISTING UTILITY LOCATIONS AND/OR ELEVATIONS. THE UTILITIES SHOWN ON THIS DRAWING HAVE BEEN PLOTTED FROM AVAILABLE INFORMATION. IT IS, HOWEVER THE CONTRACTORS RESPONSIBILITY TO FIELD VERIFY THE LOCATIONOF ALL UTILITIES AND SITE ELEVATIONS PRIOR TO THE COMMENCEMENT OF ANY CONSTRUCTION. CONTRACTOR TO FIELD VERIFY ALL EXISTING SITE CONDITIONS PRIOR TO CONSTRUCTION. IF A CONFLICT EXISTS BETWEEN WHAT IS SHOWN ON THESE DRAWINGS AND WHAT EXISTS IN THE FIELD, THE CONTRACTOR IS TO NOTIFY THE ARCHITECT OR ENGINEER IMMEDIATELY.

FIRE LANE NOTES:

1. PAINT ENTIRE FACE OF CURB OR PAVEMENT AS SHOWN RED PER C.C.F.D. STANDARDS.
2. STENCIL WHITE "FIRE LANE" TEXT ON FACE OF CURB @ 50' ALTERNATING PER C.C.F.D. STANDARDS.
3. INSTALL GREEN REFLECTIVE MARKER ALONG CENTERLINE OF ROADWAY @ 100' ON CENTER.

FIRE ACCESS LEGEND:

- PAINTED CURB OR PAVEMENT
- FIRE TRUCK ACCESSIBLE ROUTE

FIRE DEPARTMENT APPROVAL

APPROVAL BY THE FIRE DEPARTMENT HAVING JURISDICTION IS REQUIRED PRIOR TO OBTAINING FINAL APPROVAL FROM THE LAS VEGAS VALLEY WATER DISTRICT.

C-08035-4-2007

CLARK COUNTY
FIRE DEPARTMENT APPROVAL

BY: Kevin O. Hart DATE: 7-9-07

APPROVAL OF THESE PLANS SHALL NOT BE CONSTRUED TO BE A PERMIT FOR, OR AN APPROVAL OF, ANY VIOLATION OF ANY OF THE PROVISIONS OF THE STATE OR COUNTY LAWS. FIRE FLOW 1500 GPM AT 20 P.S.I. RESIDUAL.

APPROVED
FOR CONSTRUCTION

LAS VEGAS VALLEY WATER DISTRICT DATE:
PROJECT # 113275

APPROVED FOR CONSTRUCTION

(resign) 6/25/07

CLARK COUNTY WATER RECLAMATION DISTRICT DATE

CCWRD PROJECT CONTROL NUMBER IS # 5555.07
SIGNATURE ON THESE PLANS SHALL NOT BE CONSTRUED TO BE A PERMIT FOR OR AN APPROVAL OF ANY VIOLATION OF CLARK COUNTY WATER RECLAMATION DISTRICT RULES, REGULATIONS, OR DESIGN AND CONSTRUCTION STANDARDS. THE APPROVAL OF THESE DRAWINGS DOES NOT GUARANTEE CAPACITY IN THE DISTRICTS COLLECTION OR TREATMENT SYSTEM.

SAFETY ALERT
Call Before You Overhead
1-702-227-2929

AVOID HITTING UNDERGROUND TRAFFIC SIGNAL AND STREET LIGHT SYSTEM CONDUITS. IT'S COSTLY!

Call before you UnderGround
1-702-455-7511
C.C. TRAFFIC OPERATIONS
AND
1-702-229-6611
LV AREA COMPUTERIZED TRAFFIC SYS.

Avoid cutting underground utility lines. It's costly.
Call before you Dig
1-800-227-2600

UTILITY PLAN

CivilWorks Inc
Engineering with "sensible" solutions tailored to your "specific" needs.
7625 Dean Martin Drive, Suite #101 • Las Vegas, NV 89139-5975
Office #:(702) 876-3474 • Fax #:(702) 876-1323

CARL'S JR. AT MCCARRAN MARKETPLACE @ EASTERN & RUSSELL
PROJECT INFORMATION

OWNER/DEVELOPER: SL INVESTMENTS INC
2950 E FLAMINGO SUITE H
LAS VEGAS, NEVADA 89119
PH: 702-734-2276
CLARK COUNTY, NEVADA

		DATE
PROJ. NO.	5/30/2007	06/14/07
PROJ. MGR.	ALISON HAYES	TECH. CHK. LEF/CRS
PROJ. MGR.	ALISON HAYES	ENGR. CHK. ADH
REVISIONS:		
1	Revise Loading Area	

PRINTS REQUIRE ENGINEER'S SEAL AND SIGN FOR PROOF OF VALIDITY.

PROFESSIONAL ENGINEER - STATE OF NEVADA
ALISON HAYES
Exp: 06/30/09
CIVIL
No. 16010
7/9/07

SHEET #: C 4.01
SHEET 5 OF 6

FILE #: 07-24524

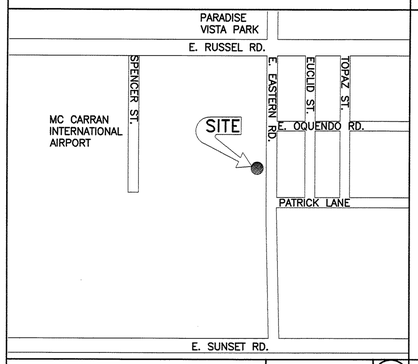

LOCATION MAP | NTS | 20

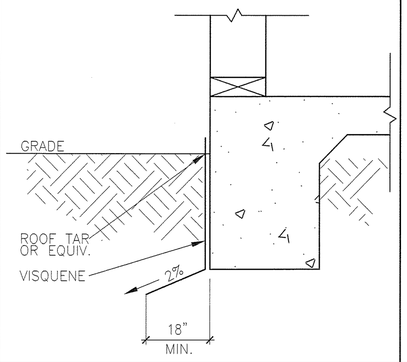

FOUNDATION DETAIL | NTS | 19

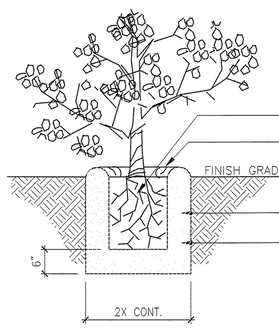

SHRUB DETAIL | NTS | 18

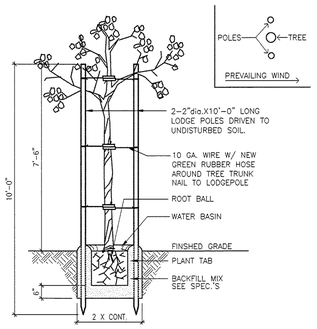

TREE DETAIL | NTS | 17

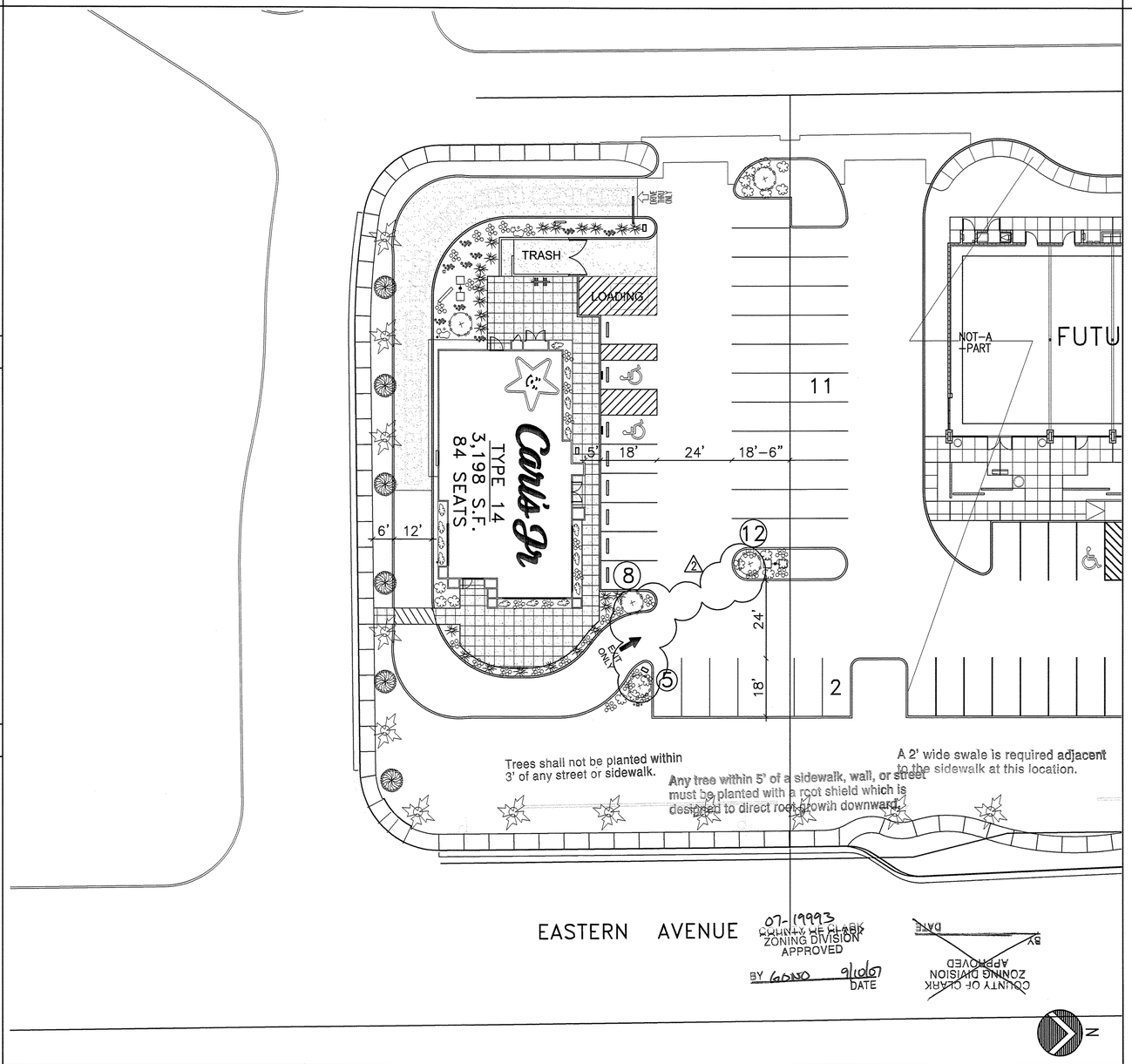

LANDSCAPE PLAN | SC: 1"= 20' | 5

KEYNOTES: THIS SHEET ONLY

LANDSCAPE SCHEDULE

KEY	SYM	COMMON NAME	BOTANICAL NAME	SIZE	NOTES
1		EXISTING PALM TREES TO REMAIN		+/- 20'	
2		EXISTING DECIDUOUS TREES TO REMAIN		24' BX	
3		FANTEX-ASH	FRANXINUS	24' BX	
4		TEXAS RANGER GREEN CLOUD	LEUCOPHYLLUM FRUTESCENS	5 GAL.	
5		DESSERT DAISY	PERITLE EMORYI	1 GAL.	CLUSTER OF SIX
6		RED YUCCA	HESPERALOE PARVIFLORA	5 GAL.	
7		TEXAS PRIVIT	LEGUSTRUM JAPONICUM TEXANUM	5 GAL.	
8		STAR JASMINE	TRACHELOSPERNUM JASMINOIDES	5 GAL.	
9		GRANITE BOULDER	1000 LBS.		

LANDSCAPE NOTES

1. THE CONTRACTOR SHALL REMOVE ALL ROCKS, WEEDS, DEBRIS & OTHER EXTRANEOUS MATERIAL FROM THE JOB SITE PRIOR TO PROCEEDING WITH ANY LANDSCAPE WORK AND DISPOSE OF IN A SUITABLE AND LAWFUL MANNOR.
2. ALL PLANTER AREAS NOT OTHERWISE NOTED TO HAVE 3" COLOR GRAVEL (MATCH EXISTING) OVER BLACK POLYETHYLENE AS GROUND COVER AROUND PLANTS AND SHRUBS. (SIZE 3/4" - dia.)
3. ALL PLANTING AREAS TO BE PROPERLY PREPARED AND FERTILIZED TO SUSTAIN LIFE AND GROWTH FOR SIX (6) MONTHS AFTER INSTALLATION
4. ALL TREES TO BE STAKED FOR SUPPORT, SEE DETAILS L-1.
5. PLANTS TO BE PLACE NO LESS THAN 3 FEET APART.
6. SUPPLY AND INSTALL ALL PIPING, FITTINGS, VALVES, HEADS, TIMER, WIRING, ETC. NECESSARY TO PROVIDE A PROPER AUTOMATIC IRRIGATION SYSTEM TO ALL PLANTING AREAS ADEQUATE TO ALLOW VIGOROUS PLANT LIFE, HEALTH, AND GROWTH. SUB-CONTRACTOR TO PROVIDE DESIGN LAYOUT FOR ARCHITECTS REVIEW.
7. THE LANDSCAPING NEXT TO THE BUILDING SHALL BE IN A SEALED PLANTER OR AWAY FROM THE BUILDING, AS RECOMMENDED PER SOILS REPORT.
8. CONTRACTOR SHALL BE RESPONSIBLE FOR SURFACE AND UNDER GROUND DRAINAGE (MIN. 2% GRADIENT ALL AREAS U.O.N.)
9. OBTAIN ALL NECCESSARY PERMITS AND INSPECTIONS FROM APPROPRIATE AGENCIES AS REQUIRED
10. CONTRACTOR TO ADJUST IRRIGATION HEADS TO KEEP MENU BOARD DRY.
11. A COMPLETE INSPECTION OF THE LANDSCAPE AND IRRIGATION WILL BE DONE AT COMPLETETION OF JOB. A PUNCH LIST WILL BE WRITTEN.
12. THE LANDSCAPING TO PROVIDE 60% COVER WITHIN 2 YEARS
13. MAINTENANCE OF NEW LANDSCAPING TO BE PROVIDED BY CARL'S JR.

TOTAL LANDSCAPE AREA: 2,176 SF
TOTAL LANDSCAPE TURF AREA: 0 SF

14. MAINTENANCE OF EXISTING LANDSCAPING TO BE PROVIDED BY SHOPPING CENTER LANLORD.

THIS DRAWING IS AN INSTRUMENT OF SERVICE BETWEEN THE ARCHITECT AND HIS CLIENT, BUT REMAINS THE PROPERTY OF THE ARCHITECT.
© ALL RIGHTS RESERVED 2007

planning/interior design
GARY GUY WILSON ARCHITECTS, PC
(702)876-0668
professional corp / certified n.c.a.r.b.
architecture/engineering/site
7625 Dean Martin Drive, Suite #100
Las Vegas, Nevada 89139

CONSULTANTS:
CIVIL: CIVILWORKS, INC. ELEC: SH NEVADA
STRUCTL: WRIGHT ENGINEERS MECH: SH NEVADA

CARL'S JR RESTAURANT
@ RUSSELL ROAD & EASTERN AVE.
McCARRAN MARKETPLACE

FOR: S.L. INVESTMENTS, MR. STEVE LARSON
CLARK COUNTY, NEVADA

PROJ.NO.	13520701.00
PROJ.ARCH.	G.G.WILSON,AIA
PROJ.MGR	MVM
JOB CAPT	MVM
TECH'N	EMD
ARCH.CHK	GGW
PH-2/3	02FEB07
PH-4	30MAR07
PH-5	02MAY07

REVISIONS
2 28JUN07 ZONGPLCHK

PRINTS REQUIRE ARCHITECT'S SEAL & SIGN. FOR PROOF OF VALIDITY

GARY G. WILSON REGISTERED No. 545 ARCHITECT NEVADA
JUL 2 8 2007

LANDSCAPE PLAN

SHT.NO. L-1

V:\2007 Projects\13520701.00 - CARL'S JR. @ McCarran Marketplace\Phase 5 - Construction Docs\A.C.S.M.P.E Plan Check Drawings\Architectural\0701L-1.dwg, 7/19/2007 4:03:53 PM, Oce 24x36.pc3

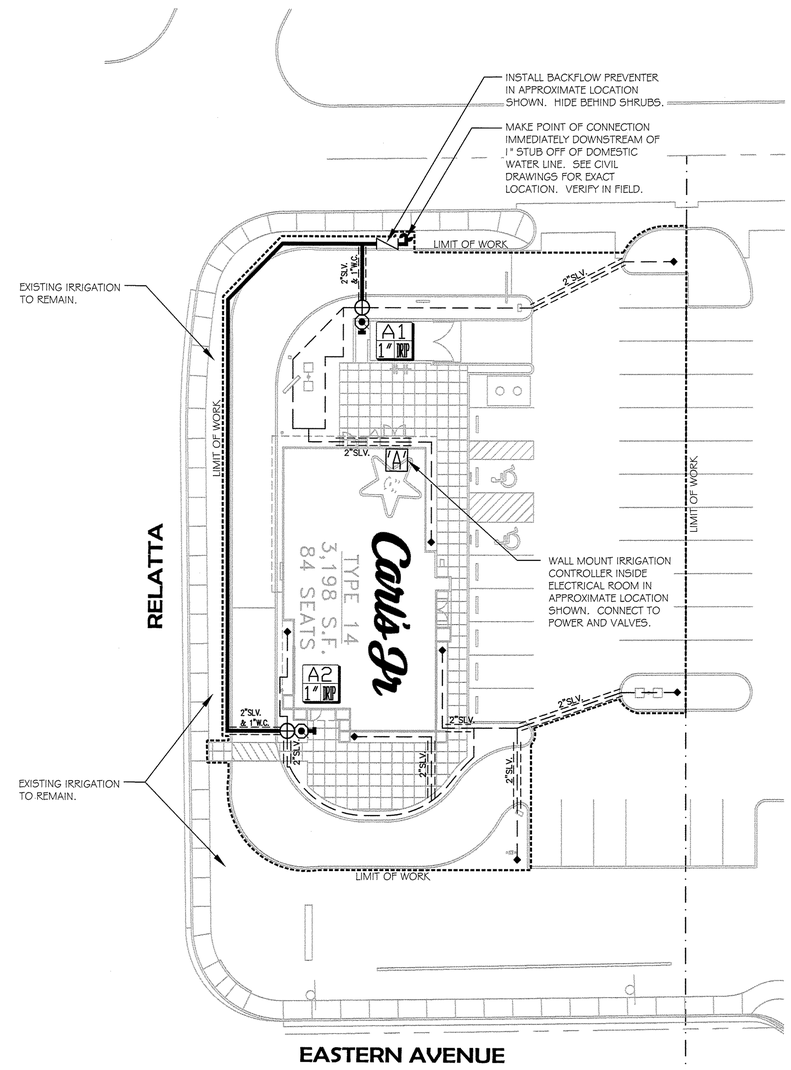

IRRIGATION LEGEND

SYMBOL	EQUIPMENT TYPE
'A'	IRRIGATION CONTROLLER. WALL MOUNT.
	BACKFLOW PREVENTER ASSEMBLY
	QUICK COUPLER
	DRIP VALVE ASSEMBLY
	AUTOMATIC END FLUSH VALVE
	MAINLINE, 1" MAINLINE UNLESS NOTED OTHERWISE
	3/4" PVC DRIP LINE
	SLEEVE
SLV.	SLV.
WC.	W.C.

NOTES:

1) SEE SHEET L-3 FOR IRRIGATION DETAILS.

2) INSTALL MAINLINE ADJACENT TO CURB OR SIDEWALK WHERE POSSIBLE.

3) INSTALL CONTROL WIRE ADJACENT TO MAINLINE WHERE POSSIBLE.

4) CONTRACTOR TO PRESERVE AND PROTECT EXISTING IRRIGATION SYSTEM AND IRRIGATION COMPONENTS. ANY PLANT MATERIAL OR IRRIGATION COMPONENTS THAT ARE DAMAGED DUE TO CONSTRUCTION ARE TO BE REPLACED AT THE CONTRACTOR'S EXPENSE WITH MATERIALS OF THE SAME SIZE, MODEL, MANUFACTURER, ETC.

5) CONTRACTOR IS TO PROVIDE IRRIGATION TO EXISITING PLANT MATERIAL THAT IS TO REMAIN DURING CONSTRUCTION. CONTRACTOR TO PROVIDE TEMPORARY IRRIGATION SYSTEM IF NECESSARY.

VALVE ID LEGEND

VALVE #
SIZE / GPM

0 20' 40' 60'

SCALE: 1" = 20'-0"

THIS DRAWING IS AN INSTRUMENT OF SERVICE BETWEEN THE ARCHITECT AND HIS CLIENT, BUT REMAINS THE PROPERTY OF THE ARCHITECT.
© ALL RIGHTS RESERVED 2007

planning/interior design
GARY GUY WILSON AIA ARCHITECTS, PC
(702)876-0668
professional corp / certified n.c.a.r.b.
architecture/engineering/site
7625 Dean Martin Drive, Suite#100
Las Vegas, Nevada 89139

CONSULTANTS:
CIVIL: CIVILWORKS, INC. ELEC: SH NEVADA
STRUCTL: WRIGHT ENGINEERS MECH: SH NEVADA

CARL'S JR RESTAURANT
@ RUSSELL ROAD & EASTERN AVE.
McCARRAN MARKETPLACE
FOR: S.L. INVESTMENTS, MR. STEVE LARSON
CLARK COUNTY, NEVADA

PROJ.NO.	13520701.00
PROJ.ARCH.	G.G.WILSON,AIA
PROJ.MGR	MVM
JOB CAPT	MVM
TECH'N	
ARCH.CHK	GGW
PH-2/3	02FEB07
PH-4	30MAR07
PH-5	02MAY07

REVISIONS

PRINTS REQUIRE ARCHITECT'S SEAL & SIGN. FOR PROOF OF VALIDITY

REGISTERED LANDSCAPE ARCHITECT
REPRY S. ELLISON III
538
4-17-07
STATE OF NEVADA

southwick LA
702 . 597 . 3108
12 Commerce Center Drive
Henderson , NV . 89014
www.southwickla.com

IRRIGATION PLAN

SHT.NO. L-2

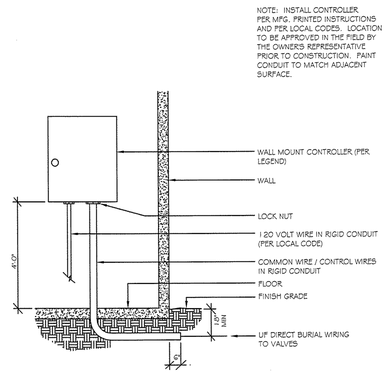

A CONTROLLER

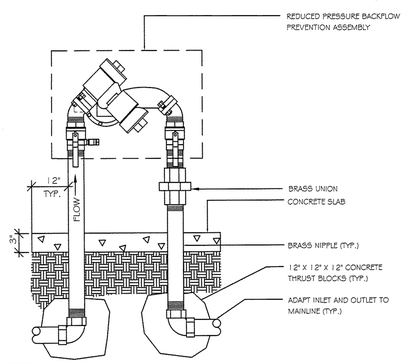

B BACKFLOW PREVENTER

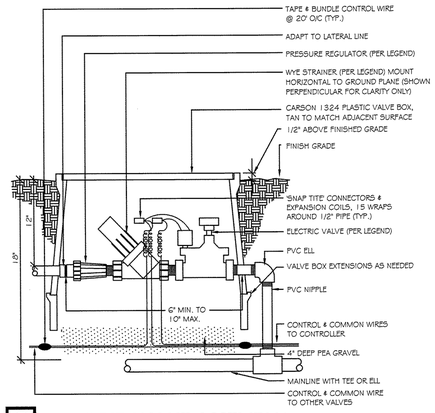

C DRIP VALVE ASSEMBLY

EMITTER QUANTITIES

PLANT SIZE	QTY.
1 Gal.	1
5 Gal.	2
15 Gal.	8
24" Box	12
36" Box	20
48" Box	32
PALMS	20
SUCCULENTS (TO BE CAPPED WHEN PLANT IS ESTABLISHED)	1

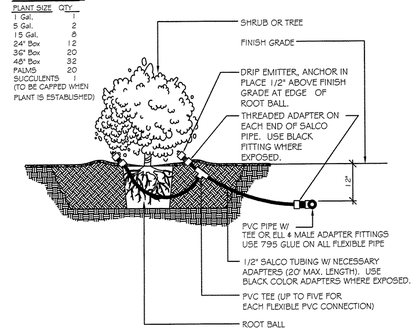

D DRIP EMITTER

NOTES:

1) THIS IS A SUGGESTED EMITTER LAYOUT PLAN. ACTUAL LAYOUT MAY VARY DEPENDING ON SURROUNDING FEATURES. THE INTENT IS TO PROVIDE WATER FOR FUTURE ROOT GROWTH.

2) ADJACENT TREES AND SHRUBS MAY SHARE THE SAME EMITTER WHERE PATTERNS OVERLAP.

3) BEGIN PLACEMENT OF EMITTERS ADJACENT TO ROOT BALL OF PLANT AND WORK OUTWARD IN ALL DIRECTIONS UNTIL THE REQUIRED NUMBER OF EMITTERS PER PLANT IS OBTAINED. WHERE LARGE PLANTS ARE INSTALLED IN NARROW PLANTERS REDUCE THE QUANTITY OF EMITTERS TO FIT THE SPACE (SEE TABLE BELOW). 5'-0" SQUARE PARKING LOT PLANTERS ONLY NEED FOUR TREE EMITTERS. KEEP ALL EMITTERS 18" FROM ANY CURB, WALK, OR OTHER PLANTER EDGE AND 36" FROM ANY BUILDING OR STRUCTURE.

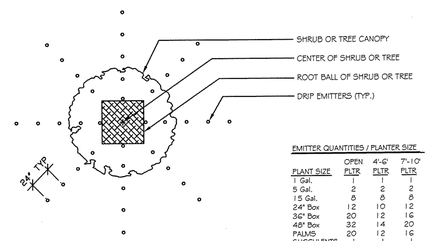

EMITTER QUANTITIES / PLANTER SIZE

PLANT SIZE	OPEN PLTR	4'-0" PLTR	7'-10" PLTR
1 Gal.	1	1	1
5 Gal.	2	2	2
15 Gal.	8	8	8
24" Box	12	10	12
36" Box	20	12	16
48" Box	32	14	20
PALMS	20	12	16
SUCCULENTS (TO BE CAPPED WHEN PLANT IS ESTABUSHED)	1	1	1

E EMITTER LAYOUT DETAIL

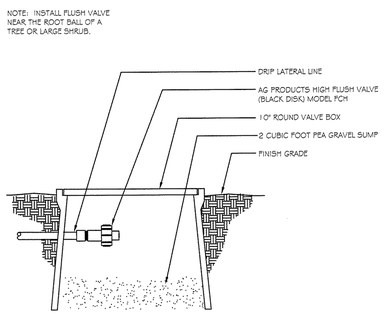

F DRIP FLUSH VALVE

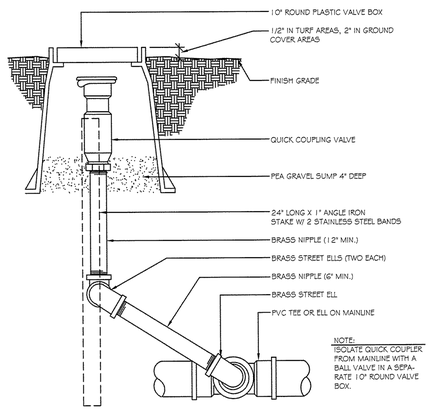

G QUICK COUPLER

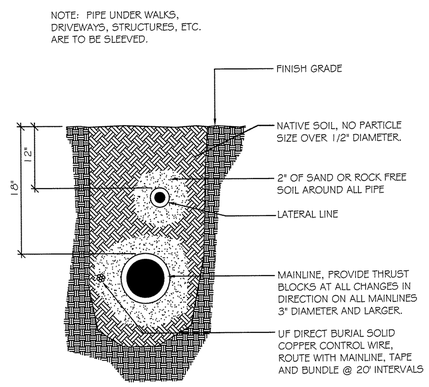

H TRENCH SECTION

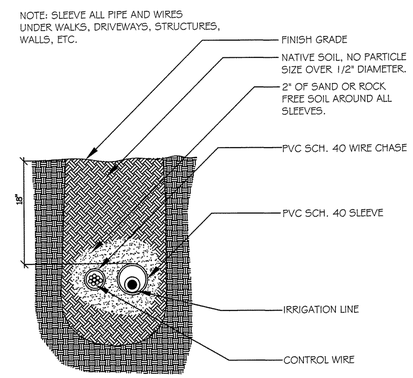

I SLEEVE SECTION

SYMBOL	MANUFACTURER-MODEL NUMBER	PAT.	RD.	PSI	GPM F	GPM TQ	GPM TT	GPM H	GPM T	GPM Q	DRIP GPH	DTL.	REMARKS
NOT SHOWN	SALCO PROSPEC, PRESSURE COMP. THREADED EMITTER, PST-2	F	--	30							2.0	D,E	FOR ALL TREES
NOT SHOWN	SALCO PROSPEC, PRESSURE COMP. THREADED EMITTER, PST-1	F	--	30							1.0	D	FOR ALL SHRUBS
M	RAINBIRD ESP-6LX PLUS, 6 STATION HYBRID CONTROLLER, WALL MOUNT INSIDE ELECTRICAL ROOM PER PLAN.											A	
	BACKFLOW PREVENTER: FEBCO 825YA-1" REDUCED PRESSURE BACKFLOW PREVENTER ASSEMBLY											B	
	DRIP VALVE ASSEMBLY: RAINBIRD PEB-100 SERIES VALVE WITH FLOW CONTROL, AGRICULTURAL PRODUCTS, INC. 4F-1" 200 MESH SCREEN FILTER , SENNINGER PMR MF-1" 30 PSI PRESSURE REGULATOR.											C	
	QUICK COUPLER: RAINBIRD 33DLRC QUICK COUPLER WITH LOCKING RUBBER COVER. PROVIDE KEY AND HOSE SWIVEL.											G	
	AGRICULTURAL PRODUCTS, INC. AUTOMATIC END FLUSH VALVE, MODEL FCH-H (BLACK DISK).											F	
	MAINLINE, PVC SCH. 40, 1", 18" MINIMUM COVER.											H	
	DRIP LINE HEADER: 3/4" DIAMETER SCHEDULE 40 PVC, 12" COVER WITH 1/2" SALCO PVC AR-050-IPS (OR EQUAL) THICK WALLED FLEXIBLE PVC TO EMITTER.											C,D	
	SLEEVES, PVC SCH. 40, SIZE PER PLAN, 18" MINIMUM COVER. EXTEND 18" PAST EDGE OF PAVEMENT.											I	
NOT SHOWN	CONTROL WIRE FROM VALVES TO CONTROLLER, UF DIRECT BURIAL, SOLID COPPER, 12 GA. COMMON, 14 GA. PILOT.											H,I	

IRRIGATION LEGEND

THIS DRAWING IS AN INSTRUMENT OF SERVICE BETWEEN THE ARCHITECT AND HIS CLIENT, BUT REMAINS THE PROPERTY OF THE ARCHITECT.
© ALL RIGHTS RESERVED 2007

planning/interior design
AIA ARCHITECTS, PC
(702)876-0668
professional corp / certified n.c.a.r.b.
architecture/engineering/site
GARY GUY WILSON
7625 Dean Martin Drive, Suite 100
Las Vegas, Nevada 89139
CONSULTANTS:
CIVIL: CIVILWORKS, INC.
STRUCTL: WRIGHT ENGINEERS
ELEC: SH NEVADA
MECH: SH NEVADA

CARL'S JR RESTAURANT
@ RUSSELL ROAD & EASTERN AVE.
McCARRAN MARKETPLACE
FOR: S.L. INVESTMENTS, MR. STEVE LARSON
CLARK COUNTY, NEVADA

PROJ.NO.	13520701.00
PROJ.ARCH.	G.G.WILSON,AIA
PROJ.MGR	MVM
JOB CAPT	MVM
TECH'N	
ARCH.CHK	GGW
PH-2/3	02FEB07
PH-4	30MAR07
PH-5	02MAY07

REVISIONS

PRINTS REQUIRE ARCHITECT'S SEAL & SIGN. FOR PROOF OF VALIDITY

REGISTERED LANDSCAPE ARCHITECT BERRY S. ELLISON III 538 4-17-07 STATE OF NEVADA

southwick LA
702 . 597 . 3108
12 Commerce Center Drive
Henderson , NV . 89014
www.southwickla.com

IRRIGATION DETAILS

SHT.NO. L-3

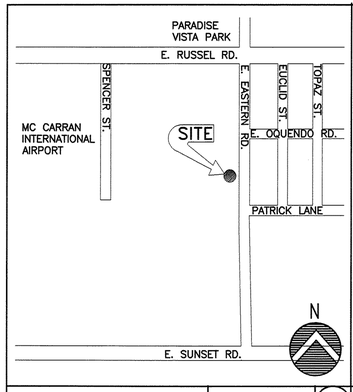

LOCATION MAP | SC: NONE | 20

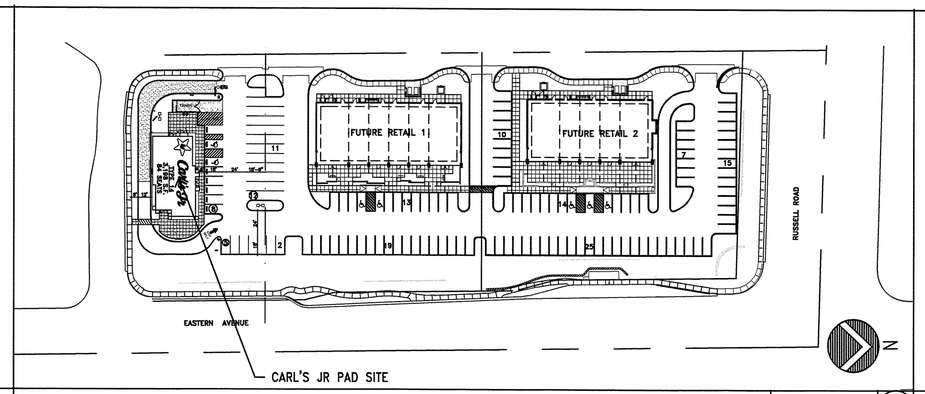

PAD SITE LOCATION | SC: NONE | 12

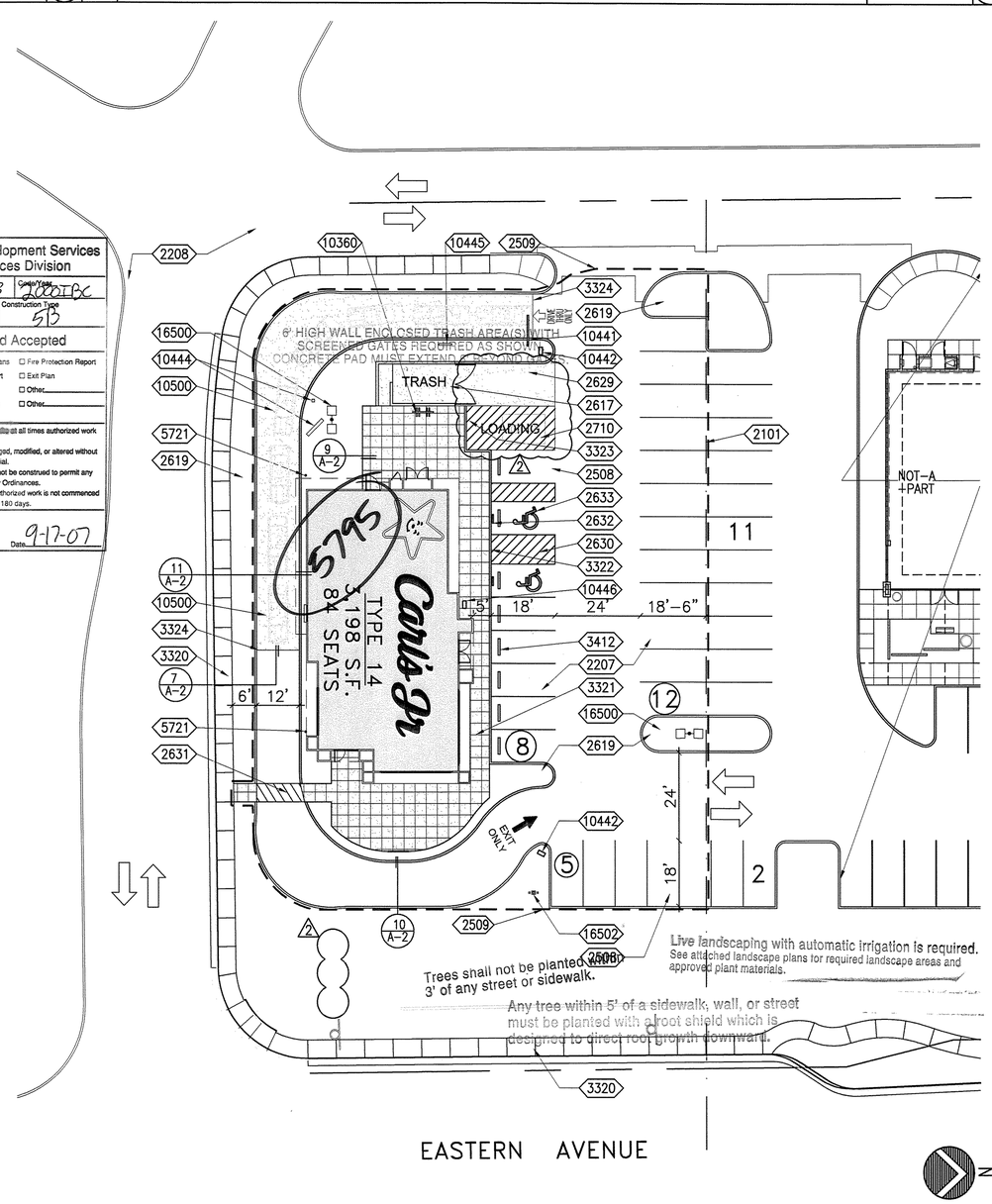

SITE PLAN | SC: 1"= 20' | 9

Clark County Development Services
Building Services Division

Application 07-19993 | Code/Year 2000IBC
Occupancy Group A-2 | Construction Type 5B

Reviewed and Accepted

- ☑ Architectural
- ☑ Mechanical
- ☑ Plumbing
- ☑ Electrical
- ☐ Grading Plans
- ☐ Soils Report
- ☑ Structural
- ☐ Gas Piping
- ☐ Fire Protection Report
- ☐ Exit Plan
- ☐ Other
- ☐ Other

1. Accepted plans shall be kept on site at all times authorized work is in progress.
2. Accepted plans shall not be changed, modified, or altered without authorization from the Building Official.
3. Acceptance of these plans shall not be construed to permit any violation of State Statutes of County Ordinances.
4. Permit becomes null and void if authorized work is not commenced within 180 days or is suspended for 180 days.

RWN/SE Date 9-17-07

KEYNOTES (THIS SHEET ONLY)

- 2101 PROPERTY LINE
- 2207 TYP. A/C PAVING
- 2208 TYP. A/C PAVING BY OTHERS
- 2508 TYP. 9' X 18' PARKING STALLS, W/3" PAINTED STRIPING.
- 2509 LIMITS OF CONSTRUCTION LINE
- 2617 TRASH ENCLOSER WITH STUCCO FINISH & PAINT TO MATCH BUILDING (22/A-2)
- 2619 PLANTER W/6" CURB
- 2629 6" CONCRETE (AT TRASH ENCLOSURE)
- 2630 ACCESS ISLE W/4" PAINT STRIPPING @ 24" O.C.
- 2631 PEDESTRIAN ACCESS ISLE, STAMPED CONCRETE IN A ASHLER STONE PATTERN
- 2632 HDCP. PARKING SIGN, TYP. EACH HDCP. STALL (19/A-2)
- 2633 HDCP. PARKING SYMBOL, TYP. EACH HDCP. STALL (15/A-2)
- 2710 CONCRETE TRAFFIC PAD OVER GREASE INTERCEPTOR, SEE CIVIL AND PLUMBING PLANS
- 3320 4" THICK CONC WALK BY OTHERS
- 3321 NEW 4" THICK CONC SIDEWALK.
- 3322 HDCP RAMPS, SEE CIVIL. TYPICAL ALL RAMPS (23/A-2)
- 3323 SERVICE RAMP, SEE CIVIL
- 3324 BLACK CONCRETE DRIVEWAY PER SPECS, EXTEND 15 FT. BEYOND SERVICE WINDOW
- 3412 CONCRETE BUMPER (16/A-2) TYPICAL EA. PKG. STALL.
- 5721 STL. PIPE BOLLARDS (12/A-2)
- 10360 BICYCLE RACK, MIN 2 BIKES
- 10441 CLEARANCE BAR (8/A-2)
- 10442 SIGN-DIRECTIONAL
- 10444 MENU SIGN AND SPEAKER (N.I.C.) (12/SN3)
- 10445 PREVIEW BOARD
- 10446 PAY TELEPHONE, SEE ELECTRICAL
- 10500 SENSOR DETAIL (20/A-2)
- 16500 PARKING LOT POLE FIXTURE, SEE ELEC. POLES/FIXTURES TO MATCH CENTER, COORD. WITH CENTER DEVELOPER.
- 16502 35' HIGH FLAG POLE WITH LIGHTING (3/A-2) (4/A-2)

2

CLARK COUNTY DEVELOPMENT SVCS. DEPT.
SEP 17 2007
APPROVED BY: RWN/SE
☐A ☐S ☐M ☐P ☐E

PARKING

80/13 spaces required.
141/25 spaced provided.
_____ handicap spaces required
_____ handicap spaces provided.

Parking reserved for handicapped persons must be marked as provided in NRS 484.406 and must be located closest to the nearest handicapped accessible entrance on a handicapped accessible route. See typical for design standards.

ALL UTILITIES MUST BE UNDER GROUND

Separate permit approval is required for walls, fences, pools, spas, and accessory structures.

5795 S. EASTERN AVE

Application #: 07-19993
Scope of Work: NEW. REST.
Clark County
Zoning Plans Examination
Reviewed & Accepted
GONO 9/10/07
By: Grant Ono Date:
Acceptance of these plans shall not be construed, intended, nor implied to be an approval of any violation of any provisions of the State or County Laws, ordinances, specifications, and/or land use approval.
Zone: C-2 AE: 70
Noise Level Reduction of 25 db required:
Expiration Date: APR. 4, 2009
Also, subject to all conditions of approval as specified within the following:
DR-0202-07
ZC0487-03, ZC-1632-04

Lighting: All on-site lighting shall be designed so that lighting doesn't shine directly onto a residential use. All light sources shall be shielded and directed downward at all times so as not to adversely impact adjacent residential uses.

PROJECT DATA

ZONING DATA:
APN # 162-35-513-006
LEGAL JURISDICTION: CLARK COUNTY, NEVADA
ZONING: C-2
BUILDING SETBACKS:

FRONT:	SIDES:	REAR:	CORNER SIDE:	LOT COVERAGE:
REQD 10'	10'	10'	10'	60%

ACREAGE:

TOTAL SITE SQUARE FOOTAGE	29,898 SF
TOTAL BUILDING SQUARE FOOTAGE	3,198 SF
SITE COVERAGE PROVIDED:	9.35 %

PARKING:

REQUIRED: 4/1000 SF	13 STALLS
PROVIDED:	26 STALLS
INCLUDING 1 ADA VAN & 1 ADA AUTO STALLS	
2 TOTAL NORTHEAST CORNER PARKING COUNT: (EA. 4/1000 SF)	
RETAIL 1 REQUIRED (8,767 SF)	36 STALLS
RETAIL 2 REQUIRED (7,619 SF)	31 STALLS
CARL'S JR. REQUIRED (3,198 SF)	13 STALLS
TOTAL REQUIRED:	80 STALLS
TOTAL PROVIDED:	141 ~~130~~ STALLS
INCLUDING 7 ADA STALLS	

SUMMARY OF THE WORK

-NEW BUILDING INCLUDING INTERIOR CONSTRUCTION (KITCHEN SERVICE, RESTROOMS, & DINING AREA) 3,198 SF
-MECHANICAL, ELECTRICAL & PLUMBING WORK AS SHOWN
-SITE WORK AS SHOWN

CODE ANALYSIS:

1. TYPE OF CONSTRUCTION: V-B (IBC CH. 6)
2. OCCUPANCY CLASSIFICATION: A2 (IBC CH. 3 & 4) 303
3. AREA: (IBC 503/504 & TBL 503)
   - ALLOWABLE 6000 S.F.
   - ALOWABLE W/INCREASE 8779 S.F.
   - ACTUAL 3198 S.F.
4. STORIES: (IBC 503 & TBL 503)
   - ALLOWABLE 1 STORIES
   - ACTUAL 1 STORIES
5. HEIGHT: (IBC 503 & TBL 503)
   - ALLOWABLE 40'-0"
   - ACTUAL 23'-0"
6. OCCUPANT LOAD: (IBC 1003 & TBL 1003.2.2.2)
   - ACTUAL 92 SEATS; 6 EMPLOYEES / SHIFT; 41 OCC (STANDING 5 SF/OCC)
   - TOTAL LOAD 139 OCCUPANTS
7. MEANS OF EGRESS
   - NUMBER OF EXITS IBC 1004 & TBL 1004.2.1 & TBL 503
     - REQUIRED 2
     - PROVIDED 2
   - EGRESS WIDTH (AMEND TABLE 1003.2.3)
     - WIDTH REQ'D. 28"
     - WIDTH PROVIDED 128"
   - MAXIMUM TRAVEL DISTANCE (AMEND TABLE 1004.2.4)
     - ALLOWED 200'
     - ACTUAL 68'
8. FIRE RESISTANCE: (IBC TBL 601)
   - REQUIRED 0
   - PROVIDED 0
   - SHAFT ENCLOSURE (LESS THAN 4 STORIES) (707.4)
     - REQUIRED 1
     - PROVIDED 1
   - NOTE: 1 HR CLG IN KITCHEN IS PROVIDED BUT NOT REQUIRED
9. EXTERIOR WALLS & OPENINGS: (IBC TBL 602)
   - REQUIRED 0 HR @ > 10' & < 30'
   - PROVIDED 0 HR ALL SIDES
10. SPECIAL INSPECTIONS: NONE (IBC CH 17)
11. CODES:
    - 2000 IBC W/ AMMENDMENTS
    - 2000 UPC W/ AMMENDMENTS
    - 2000 UMC W/ AMMENDMENTS
    - 2000 UFC W/ AMMENDMENTS
    - 2002 NEC W/ AMMENDMENTS
    - 2003 IECC
12. FIRE SPRINKLERS: NO (IBC CH 9)
    - 3198 SF ACTUAL < 8779 ALLOWED
    - OCC LOAD 139 ACTUAL < 300 OCC ALLOWED
    - 1 STORY (LEVEL OF DISCHARGE)
    - CONCLUSION: SPRINKLERS NOT REQUIRED
13. DESIGN: SEISMIC 2B, WIND SPEED 90 MPH; SEE STRUCTURAL
14. SEATING ACCESSIBILITY (1107.2.5.1)
    - REQUIRED (5% ACCESSIBLE) 5
    - PROVIDED (MOVABLE CHAIRS) 5 (SEE K-7)
15. REFERENCE FILE/ ACTIONS:
    - ZC-1632-04

THIS DRAWING IS AN INSTRUMENT OF SERVICE BETWEEN THE ARCHITECT AND HIS CLIENT, BUT REMAINS THE PROPERTY OF THE ARCHITECT.
© ALL RIGHTS RESERVED 2007

GARY GUY WILSON ARCHITECTS, PC
planning/interior design
(702)876-0668
professional corp / certified n.c.a.r.b.
architecture/engineering/site
7625 Dean Martin Drive, Suite #100
Las Vegas, Nevada 89139
CONSULTANTS:
CIVIL: CIVILWORKS, INC. ELEC: SH NEVADA
STRUCTL: WRIGHT ENGINEERS MECH: SH NEVADA

CARL'S JR RESTAURANT @ RUSSELL ROAD & EASTERN McCARRAN MARKETPLACE

FOR: S.L. INVESTMENTS, MR. STEVE LARSON
CLARK COUNTY, NEVADA

PROJ.NO.	13520701.00
PROJ.ARCH.	G.G.WILSON,AIA
PROJ.MGR	MVM
JOB CAPT	MVM
TECH'N	VAN/EMD
ARCH.CHK	GGW
PH-2/3	02FEB07
PH-4	30MAR07
PH-5	02MAY07

REVISIONS
2 28JUN07 ZONGPLCHK

PRINTS REQUIRE ARCHITECT'S SEAL & SIGN. FOR PROOF OF VALIDITY.

GARY G. WILSON REGISTERED No. 545 ARCHITECT STATE OF NEVADA
JUL 9 8 2007

SITE PLAN/ PROJECT DATA

SHT.NO. A-1

V:\2007 Projects\13520701.00 - CARL'S JR. @ McCarran Marketplace\Phase 5 - Construction Docs\A.C.S.M.P.E Plan Check Drawings\Architectural\0701A1.0.dwg, 7/19/2007 4:21:39 PM, Oce 24x36.pc3

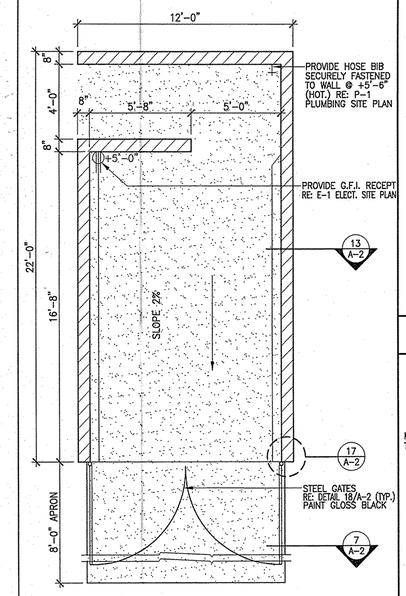

CONSTRUCT TRASH ENCLOSURE W/8"x8"x16" CONCRETE BLOCK.

*WHERE BUILDING IS STUCCO TRASH ENCLOSURE IS TO MATCH BUILDING. RE: ELEVATIONS A-4 & A-5 (EXTERIOR FACE ONLY).

*SMOOTH PLASTER FINISH INTERIOR PAINT WHITE. RE: A-13 FOR EXTERIOR FINISH SCHEDULE.

CONC. SLAB & APRON TO BE BLACK – INTEGRAL COLOR UNLESS OTHERWISE NOTED

TRASH ENCLOSURE — SCALE: 1/4"=1'-0" — 22

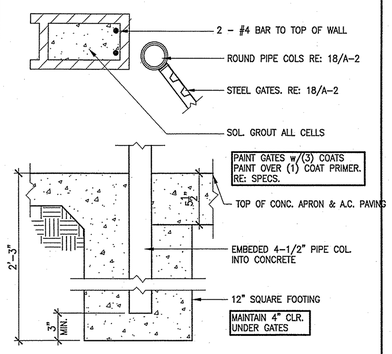

GATE DETAIL — SCALE: 1 1/2"=1'-0" — 17

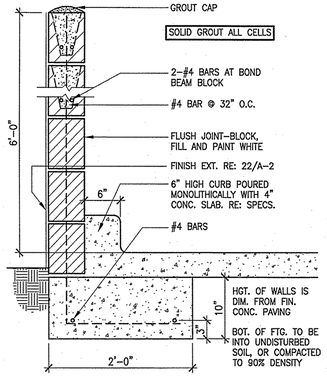

ENCLOSURE WALL — SCALE: 1"=1'-0" — 13

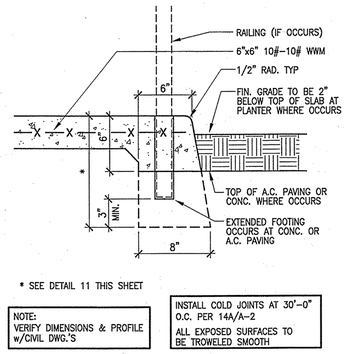

* SEE DETAIL 11 THIS SHEET

NOTE: VERIFY DIMENSIONS & PROFILE w/CIVIL DWG.'S

INSTALL COLD JOINTS AT 30'-0" O.C. PER 14A/A-2

ALL EXPOSED SURFACES TO BE TROWELED SMOOTH

CURB DETAIL — SCALE: 1 1/2"=1'-0" — 9

... — SCALE: ... — 5

... — SCALE: ... — 1

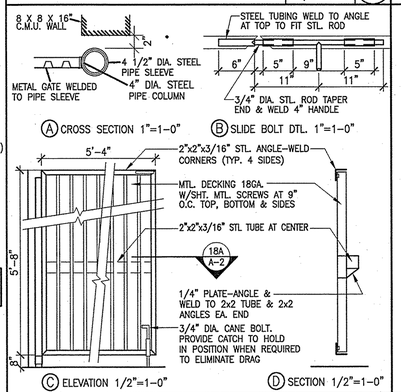

TRASH GATES — SCALE: AS NOTED — 18

NOTE: RE: NOTE #8 DETAIL 4/P-3 FOR INFO. REGARDING GREASE INTERCEPTOR SLAB.

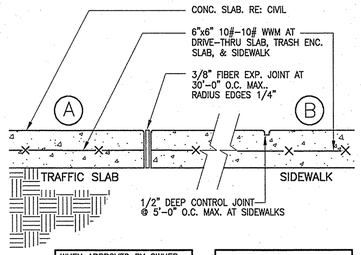

WHEN APPROVED BY OWNER A 1" DEEP BY 1/8" WIDE SAWED JOINT MAY BE USED AND MUST BE DONE NO LATER THAN 24 HRS. AFTER CONCRETE IS POURED.

USE VERY LIGHT BROOM FINISH AT DRIVE-THRU SLAB ONLY

SEE GRADING PLAN FOR GRADES OF CONC. AT DRIVE-THRU

EXP./CONTROL JOINT — SCALE: 1 1/2"=1'-0" — 14

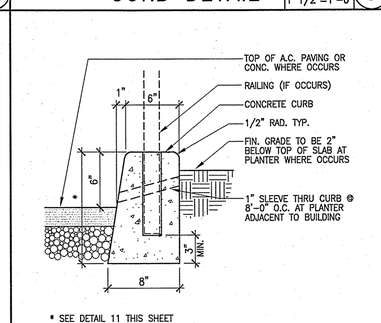

* SEE DETAIL 11 THIS SHEET

NOTE: VERIFY DIMENSIONS & PROFILE w/CIVIL DWG.'S

INSTALL COLD JOINTS AT 30'-0" O.C. PER 14A/A-2

ALL EXPOSED SURFACES TO BE TROWELED SMOOTH

RAISED CURB — SCALE: 1 1/2"=1'-0" — 10

... — SCALE: ... — 6

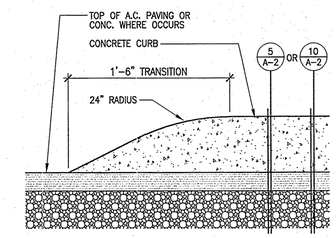

NOTE: VERIFY DIMENSIONS & PROFILE w/CIVIL DWG.'S

INSTALL COLD JOINTS AT 30'-0" O.C. PER 14A/A-2

ALL EXPOSED SURFACES TO BE TROWELED SMOOTH

TRANSITION CURB — SCALE: 1 1/2"=1'-0" — 2

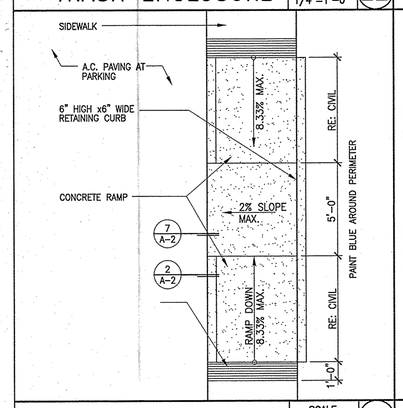

HANDICAP CURB RAMP — SCALE: 1/4"=1'-0" — 23

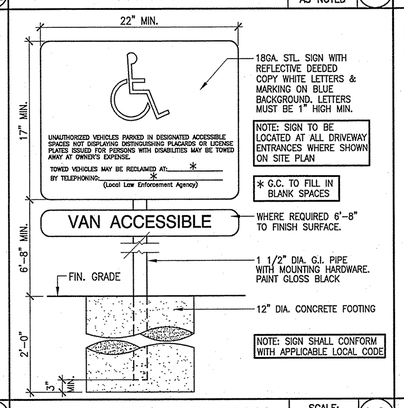

NOTE: SIGN TO BE LOCATED AT ALL DRIVEWAY ENTRANCES WHERE SHOWN ON SITE PLAN

* G.C. TO FILL IN BLANK SPACES

WHERE REQUIRED 6'-8" TO FINISH SURFACE.

NOTE: SIGN SHALL CONFORM WITH APPLICABLE LOCAL CODE

HANDICAP SIGN — SCALE: NONE — 19

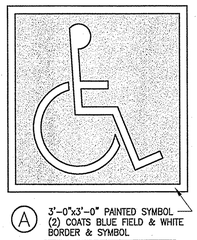

A 3'-0"x3'-0" PAINTED SYMBOL (2) COATS BLUE FIELD & WHITE BORDER & SYMBOL

SYMBOL TO BE CENTERED ON WIDTH OF PARKING STALL

B IN ADDITION TO PAINTED, PARKING SYMBOL PROVIDE A 70 SQ. IN. SIGN SHOWING H/C SYMBOL ONLY, AT EACH HANDICAPPED PARKING STALL PER TITLE 24 AND A.D.A.. ALSO PROVIDE A SIGN BELOW THAT READS: "VAN ACCESSIBLE" AT STALL TO THE LEFT OF LOADING ZONE.

C ACCESSIBLE PATH OF TRAVEL MUST HAVE DIRECTIONAL SIGNS w/I.S.A. SYMBOL AS REQUIRED TO DRIECT PATH TO ENTRANCE OF BUILDING.

HANDICAP SYMBOL — SCALE: NONE — 15

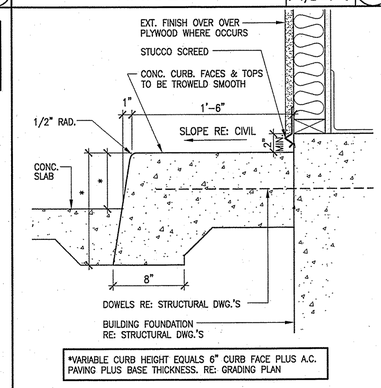

*VARIABLE CURB HEIGHT EQUALS 6" CURB FACE PLUS A.C. PAVING PLUS BASE THICKNESS. RE: GRADING PLAN

CURB DETAIL — SCALE: 1 1/2"=1'-0" — 11

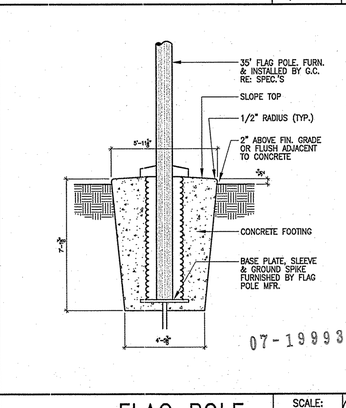

FLAG POLE — SCALE: 1/2"=1'-0" — 3

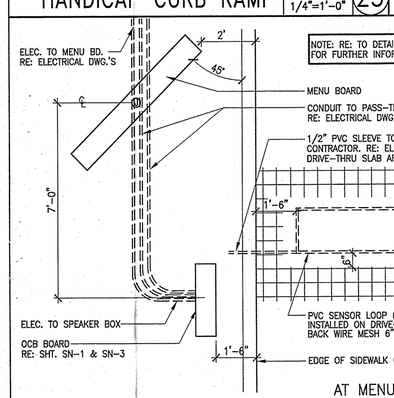

NOTE: RE: TO DETAIL 12/SN-3 FOR FURTHER INFORMATION

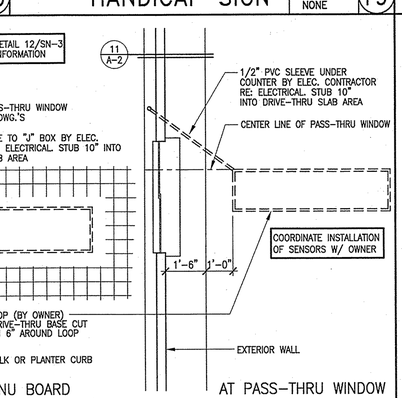

COORDINATE INSTALLATION OF SENSORS W/ OWNER

SENSOR DETAIL — SCALE: 3/8"=1'-0" — 20

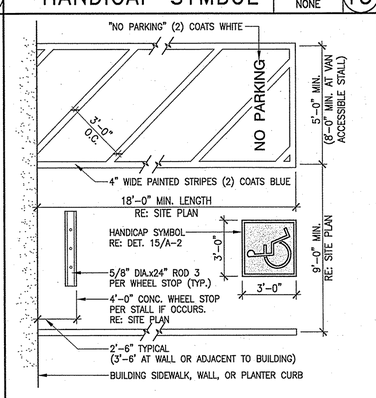

STRIPING DETAIL — SCALE: NONE — 16

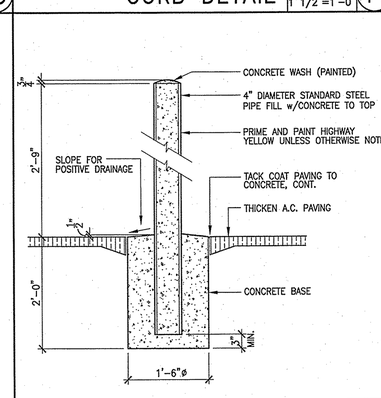

PIPE GUARD — SCALE: 3/4"=1'-0" — 12

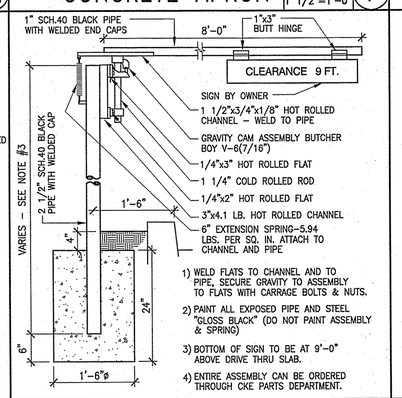

1) WELD FLATS TO CHANNEL AND TO PIPE, SECURE GRAVITY TO ASSEMBLY TO FLATS WITH CARRAGE BOLTS & NUTS.

2) PAINT ALL EXPOSED PIPE AND STEEL "GLOSS BLACK" (DO NOT PAINT ASSEMBLY & SPRING)

3) BOTTOM OF SIGN TO BE AT 9'-0" ABOVE DRIVE THRU SLAB.

4) ENTIRE ASSEMBLY CAN BE ORDERED THROUGH CKE PARTS DEPARTMENT.

1 1/2"x3/4"x1/8" HOT ROLLED CHANNEL – WELD TO PIPE
GRAVITY CAM ASSEMBLY BUTCHER BOY V-6(7/16")
1/4"x3" HOT ROLLED FLAT
1 1/4" COLD ROLLED ROD
1/4"x2" HOT ROLLED FLAT
3"x4.1 LB. HOT ROLLED CHANNEL
6" EXTENSION SPRING-5.94 LBS. PER SQ. IN. ATTACH TO CHANNEL AND PIPE

CLEARANCE BAR — SC: 3/4"=1'-0" — 8

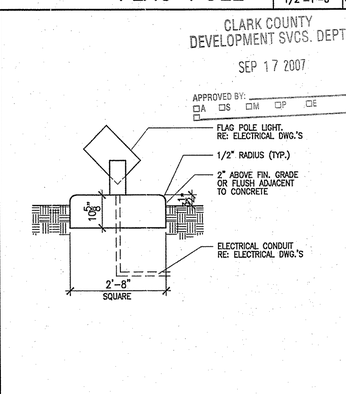

FLAG POLE LIGHT BASE — SCALE: 1"=1'-0" — 4

THIS DRAWING IS AN INSTRUMENT OF SERVICE BETWEEN THE ARCHITECT AND HIS CLIENT, BUT REMAINS THE PROPERTY OF THE ARCHITECT.
© ALL RIGHTS RESERVED 2007

GARY GUY WILSON ARCHITECTS, PC
planning/interior design
(702)876-0668
professional corp / certified n.c.a.r.b.
architecture/engineering/site
7625 Dean Martin Drive, Suite#100
Las Vegas, Nevada 89139

CONSULTANTS:
CIVIL: CIVILWORKS, INC.
STRUCTL: WRIGHT ENGINEERS
ELEC: SH NEVADA
MECH: SH NEVADA

CARL'S JR RESTAURANT
@ RUSSELL ROAD & EASTERN AVE.
McCARRAN MARKETPLACE
FOR: S.L. INVESTMENTS, MR. STEVE LARSON
CLARK COUNTY, NEVADA

PROJ.NO.	13520701.00
PROJ.ARCH.	G.G.WILSON,AIA
PROJ.MGR	MVM
JOB CAPT	MVM
TECH'N	VAN/EMD
ARCH.CHK	GGW
PH-2/3	02FEB07
PH-4	30MAR07
PH-5	02MAY07

REVISIONS

PRINTS REQUIRE ARCHITECT'S SEAL & SIGN. FOR PROOF OF VALIDITY

GARY G. WILSON REGISTERED No. 545 STATE OF NEVADA
APR 19 2007

SITE PLAN DETAILS

SHT.NO. A-2

1) REFER TO "K" DRAWINGS FOR KITCHEN AND SEATING EQUIPMENT.
2) REFER TO STRUCTURAL DRAWINGS FOR ALL POSTS INDICATED IN FRAMING WALLS AND FOR LOCATION OF ALL SHEAR PANELS.
3) ALL EXTERIOR WALLS AND CEILING SPACES TO RECEIVE THERMAL INSULATION. INTERIOR WALLS AROUND RESTROOMS AND RESTROOM VEST. TO RECEIVE SOUND INSULATION. RE: SPEC.'S
4) FOR LOCATION OF FLOOR SINKS AND FLOOR DRAINS SEE "K" & "P" DRAWINGS.
5) ALL FRAMING DIMENSIONS ARE ROUGH FRAMING, AND DO NOT INCLUDE ANY FINISH MATERIALS UNLESS OTHERWISE NOTED.
6) ALL WALLS SHALL BE OF 2x4 STUDS UNLESS OTHERWISE NOTED.
7) APPLY BORIC ACID ON TOP OF THE MUD SILL OR BOTTOM PLATE, PRIOR TO CLOSING ALL WALLS.
8) PROVIDE BACKING FOR RESTROOM ACCESSORIES, DOOR STOPS, EXP. JOINTS, CABINETS, ETC.
9) INSTALL OCCUPANT LOAD SIGN PER 18/A-11
10) PROVIDE MASTIC OR APPROVED SEALANT UNDER ALL EXT. PLATES
11) (XX) REFER A-13 FOR INTERIOR FINISH SCHEDULE.
12) (X) REFER A-13 FOR WINDOW SCHEDULE.
13) (1) REFER A-13 FOR DOOR SCHEDULE.
14) ♿ INDICATES HANDICAP SEATING LOCATION
15) THE WALL BETWEEN ELECTRICAL RM.#111 AND OFFICE#107 & SCULLERY #110 SHALL BE PROVIDED WITH ONE LAYER OF 5/8" TYPE "X" GYPBD. EACH SIDE FOR 1-HR RATING PER NEC 230.70 SNA.

GENERAL NOTES — SC: NA — 1

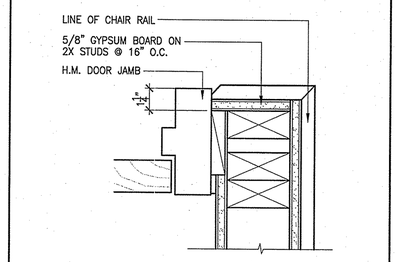

CORNER DETAILS — SC: 3"=1'-0" — 2

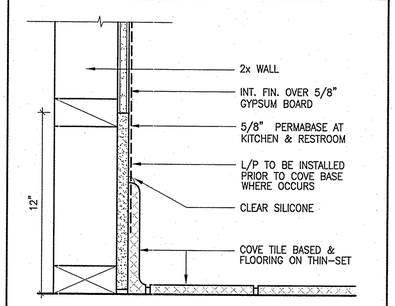

07-19993--

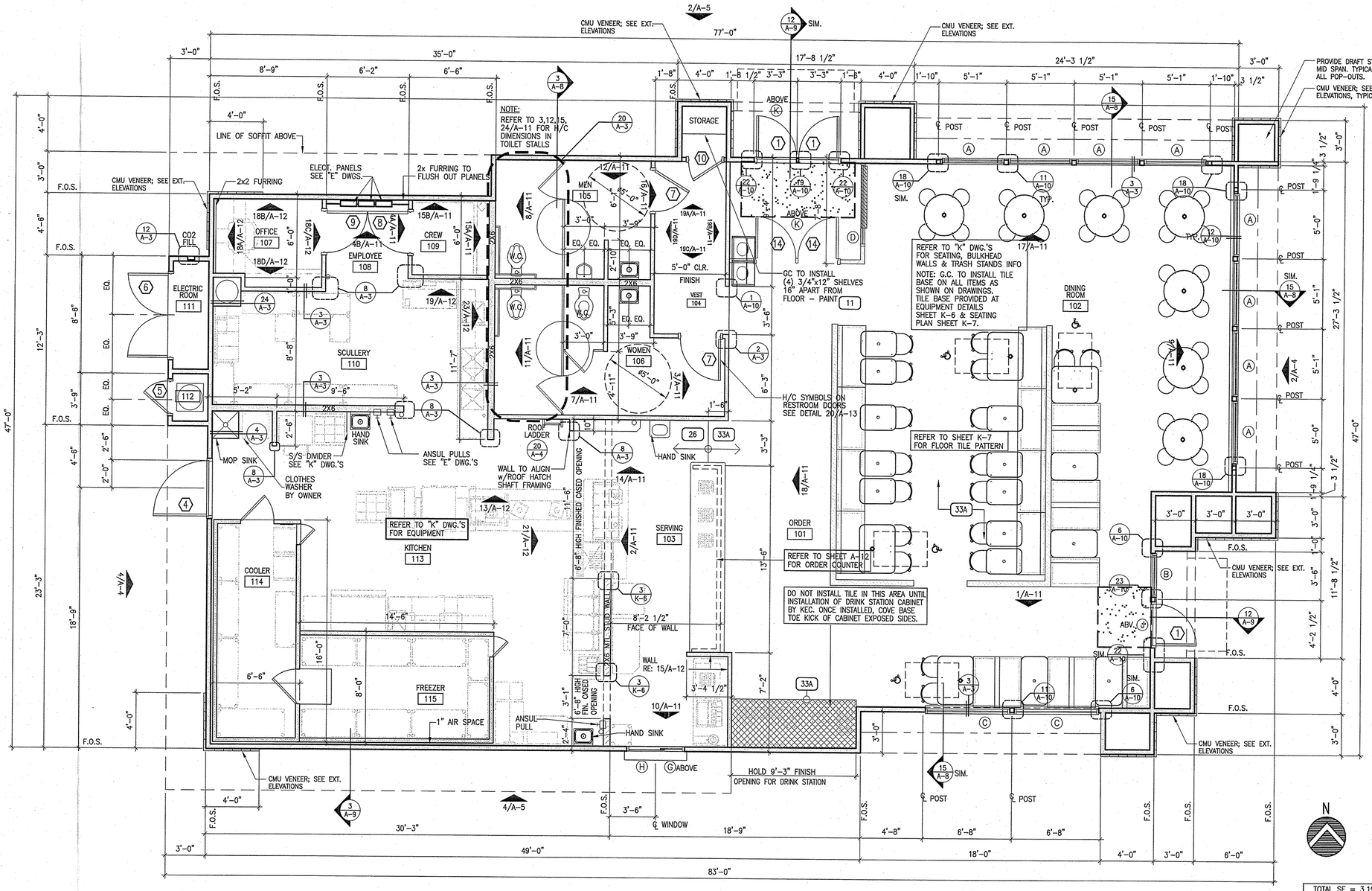

FLOOR PLAN — SC: 1/4"=1'-0" — 7

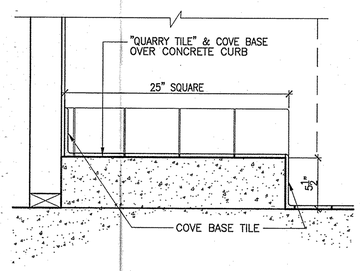

CURB DETAIL — SC: 1 1/2"=1'-0" — 24

NOTE: SEE A-11 FOR LOCATION OF RESTROOM ACCESSORIES

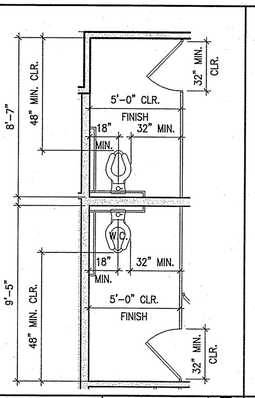

H/C RESTROOMS — SC: 1/4"=1'-0" — 20

07-19993
COUNTY OF CLARK
ZONING DIVISION
APPROVED
BY 60030 9/10/07 DATE

NOISE LEVEL REDUCTION OF 25 DECIBELS REQUIRED

... — SC: N.T.S.

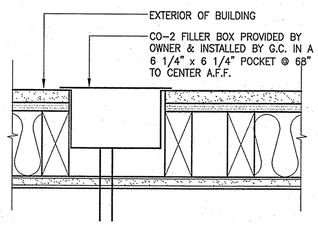

CO2 FILLER BOX — SC: 3"=1'-0" — 12

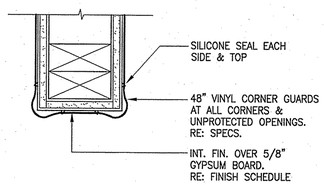

CORNER GUARD — SC: 3"=1'-0" — 8

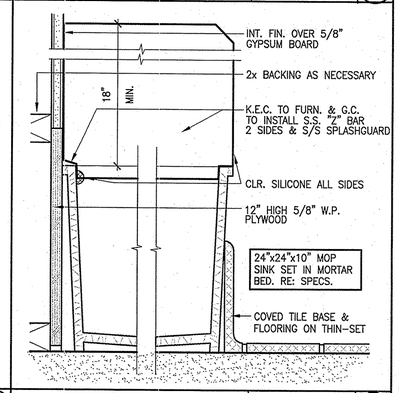

MOP SINK — SC: 3"=1'-0" — 4

THIS DRAWING IS AN INSTRUMENT OF SERVICE BETWEEN THE ARCHITECT AND HIS CLIENT, BUT REMAINS THE PROPERTY OF THE ARCHITECT.
© ALL RIGHTS RESERVED 2007

planning/interior design
GARY GUY WILSON ARCHITECTS, PC
(702)876-0668
professional corp / certified n.c.a.r.b.
architecture/engineering/site
7625 Dean Martin Drive, Suite#100
Las Vegas, Nevada 89139

CONSULTANTS:
CIVIL: CIVILWORKS, INC. ELEC: SH NEVADA
STRUCTL: WRIGHT ENGINEERS MECH: SH NEVADA

CARL'S JR RESTAURANT
@ RUSSELL ROAD & EASTERN AVE.
McCARRAN MARKETPLACE
FOR: S.L. INVESTMENTS, MR. STEVE LARSON
CLARK COUNTY, NEVADA

PROJ.NO.	13520701.00
PROJ.ARCH.	G.G.WILSON,AIA
PROJ.MGR	MVM
JOB CAPT	MVM
TECH'N	VAN/EMD
ARCH.CHK	GGW
PH-2/3	02FEB07
PH-4	30MAR07
PH-5	02MAY07

REVISIONS
CLARK COUNTY DEVELOPMENT SVCS. DEPT.
SEP 17 2007
APPROVED BY: DS DM DP DE

PRINTS REQUIRE ARCHITECT'S SEAL & SIGN. FOR PROOF OF VALIDITY
GARY G. WILSON REGISTERED No. 545 ARCHITECT NEVADA
APR 19 2007

FLOOR PLAN AND DETAILS
SHT.NO. A-3

1. ALL EXTERIOR NAILING SHALL BE GALVANIZED FINISH NAILS DRIVEN FLUSH WITH SURFACE ON ALL WOOD TRIM & SIDING WHERE OCCURS.
2. ALL EXTERIOR TRIM SHALL BE AS CALLED OUT IN SPECIFICATIONS.
3. ADDRESS NUMBERS PROVIDED BY CKE & INSTALL BY G.C.. CONTACT LETTER PERFECT: PHONE (714) 871-0220 ADDRESS NUMBER NOTE: PERMANENT THREE DIMENSIONAL 12" HIGH IN APPROVED LOCATIONS, CONTACT FIRE DEPT. TO VERIFY LOCATION.
4. RE: A-13 (EXTERIOR FINISH SCHEDULE) FOR ALL COLORS & FINISH MATERIALS. X
5. WHERE STUCCO APPLIED OVER WOOD-BASED SHEATHING SHALL HAVE A WEATHER-RESISTIVE VAPOR PERMEABLE BARRIER WITH A PERFORMANCE AT LEAST EQUIVALENT TO TWO LAYERS OF GRADE D PAPER.
6. EXTERIOR MASONRY VENEER (WHEN UTILIZED), SHALL BE ATTACHED AS PER IBC 1405.9 FOR ADHEARED MASONRY VENEER.

SCALE: ... 21

SCALE:

GENERAL NOTES

SCALE: N.T.S. 13

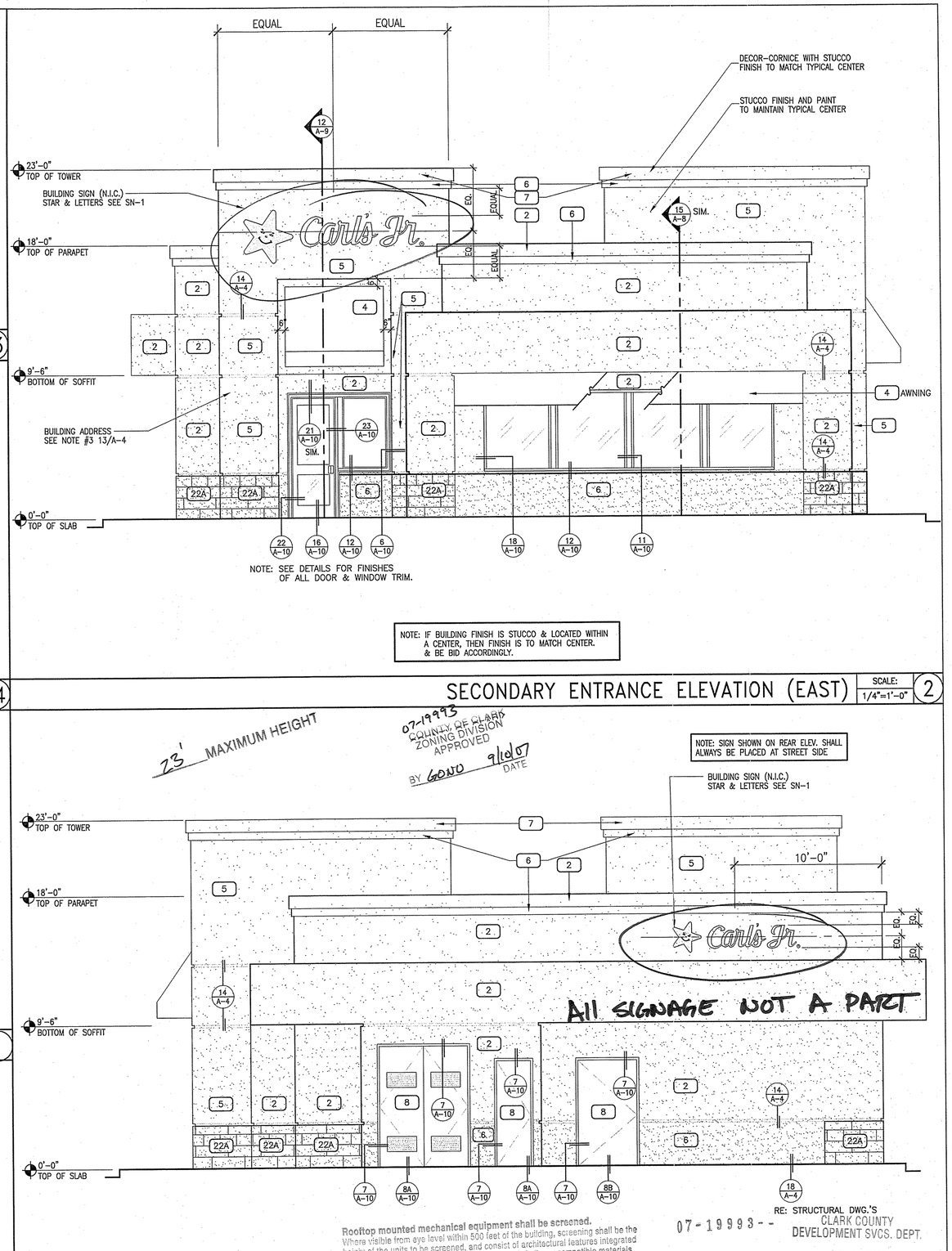

NOTE: IF BUILDING FINISH IS STUCCO & LOCATED WITHIN A CENTER, THEN FINISH IS TO MATCH CENTER. & BE BID ACCORDINGLY.

SECONDARY ENTRANCE ELEVATION (EAST)

SCALE: 1/4"=1'-0" 2

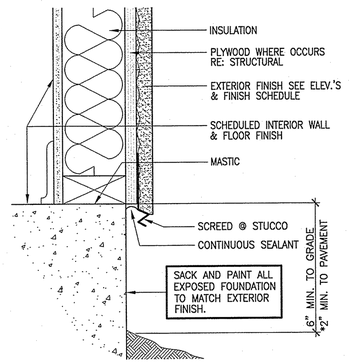

SCALE:

SCREED

SCALE: 3"=1'-0" 18

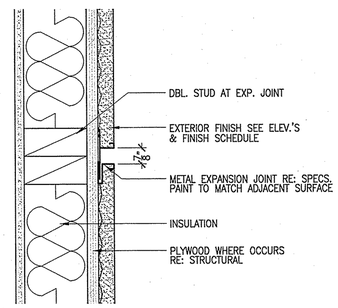

EXPANSION JOINT

SCALE: 3" = 1'-0" 14

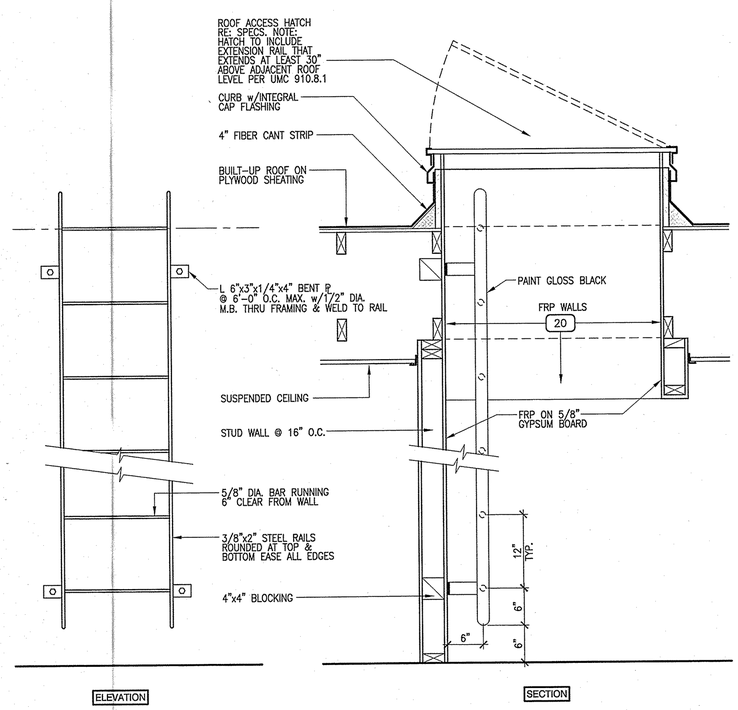

ROOF ACCESS LADDER & HATCH

SCALE: 1"=1'-0" 20

SCALE:

SCALE:

Rooftop mounted mechanical equipment shall be screened. Where visible from eye level within 500 feet of the building, screening shall be the height of the units to be screened, and consist of architectural features integrated into the design of the building and constructed of similar or compatible materials as the building. T30 Table 30.5612

07-19993--

RE: STRUCTURAL DWG.'S

CLARK COUNTY DEVELOPMENT SVCS. DEPT.

SEP 17 2007

APPROVED BY: ☐A ☐S ☐M ☐P ☐E

SERVICE ENTRANCE ELEVATION (WEST)

SCALE: 1/4"=1'-0" 4

THIS DRAWING IS AN INSTRUMENT OF SERVICE BETWEEN THE ARCHITECT AND HIS CLIENT, BUT REMAINS THE PROPERTY OF THE ARCHITECT.
© ALL RIGHTS RESERVED 2007

architecture/engineering/site planning/interior design
GARY GUY WILSON ARCHITECTS, PC
7625 Dean Martin Drive, Suite#100 Las Vegas, Nevada 89139
(702)876-0668
professional corp / certified n.c.a.r.b.

CONSULTANTS:
CIVIL: CIVILWORKS, INC.
STRUCTL: WRIGHT ENGINEERS
ELEC: SH NEVADA
MECH: SH NEVADA

CARL'S JR RESTAURANT
@ RUSSELL ROAD & EASTERN AVE.
McCARRAN MARKETPLACE
FOR: S.L. INVESTMENTS, MR. STEVE LARSON
CLARK COUNTY, NEVADA

PROJ.NO.	13520701.00
PROJ.ARCH.	G.G.WILSON,AIA
PROJ.MGR	MVM
JOB CAPT	MVM
TECH'N	VAN/EMD
ARCH.CHK	GGW
PH-2/3	02FEB07
PH-4	30MAR07
PH-5	02MAY07

REVISIONS
1 .....

PRINTS REQUIRE ARCHITECT'S SEAL & SIGN. FOR PROOF OF VALIDITY.

GARY G. WILSON REGISTERED No. 545 ARCHITECT STATE OF NEVADA

APR 19 2007

EXTERIOR ELEVATIONS & DETAILS

SHT.NO. A-4

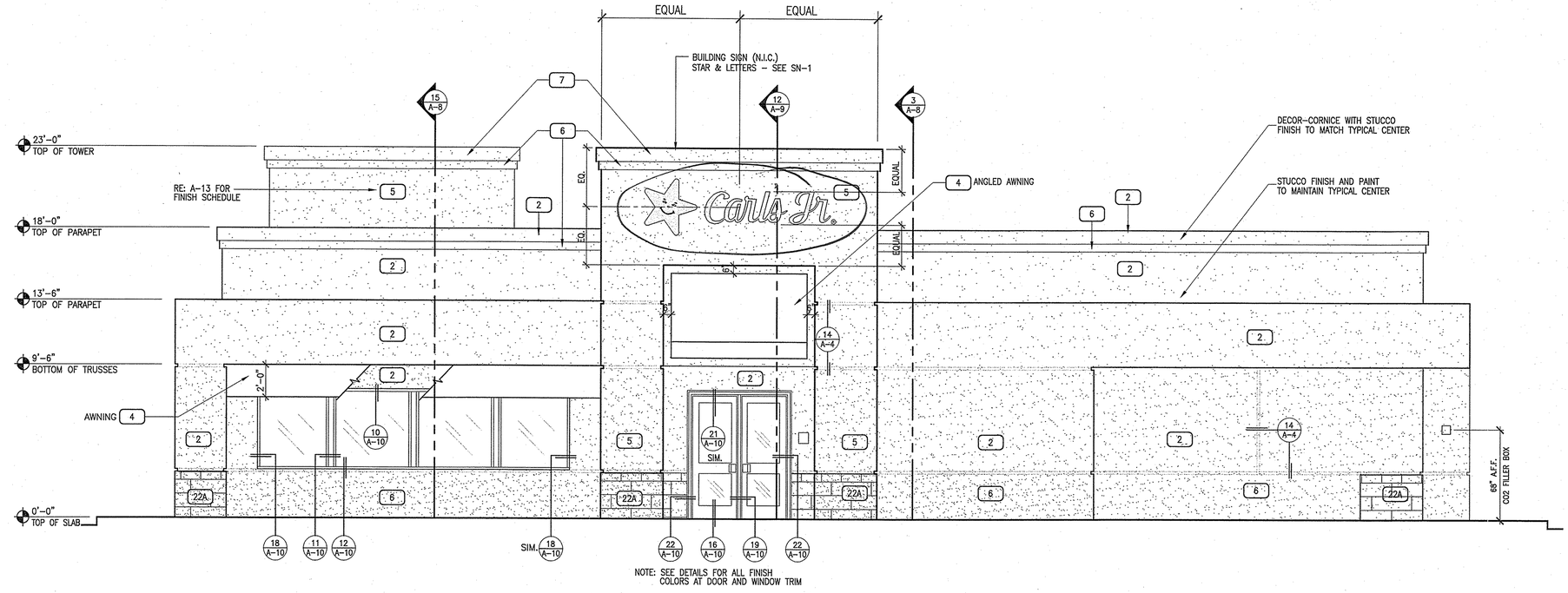

MAIN ENTRANCE ELEVATION (WEST) SC: 1/4"=1'-0" (2)

Rooftop mounted mechanical equipment shall be screened.
Where visible from eye level within 500 feet of the building, screening shall be the height of the units to be screened, and consist of architectural features integrated into the design of the building and constructed of similar or compatible materials as the building. T30 Table 30.5612

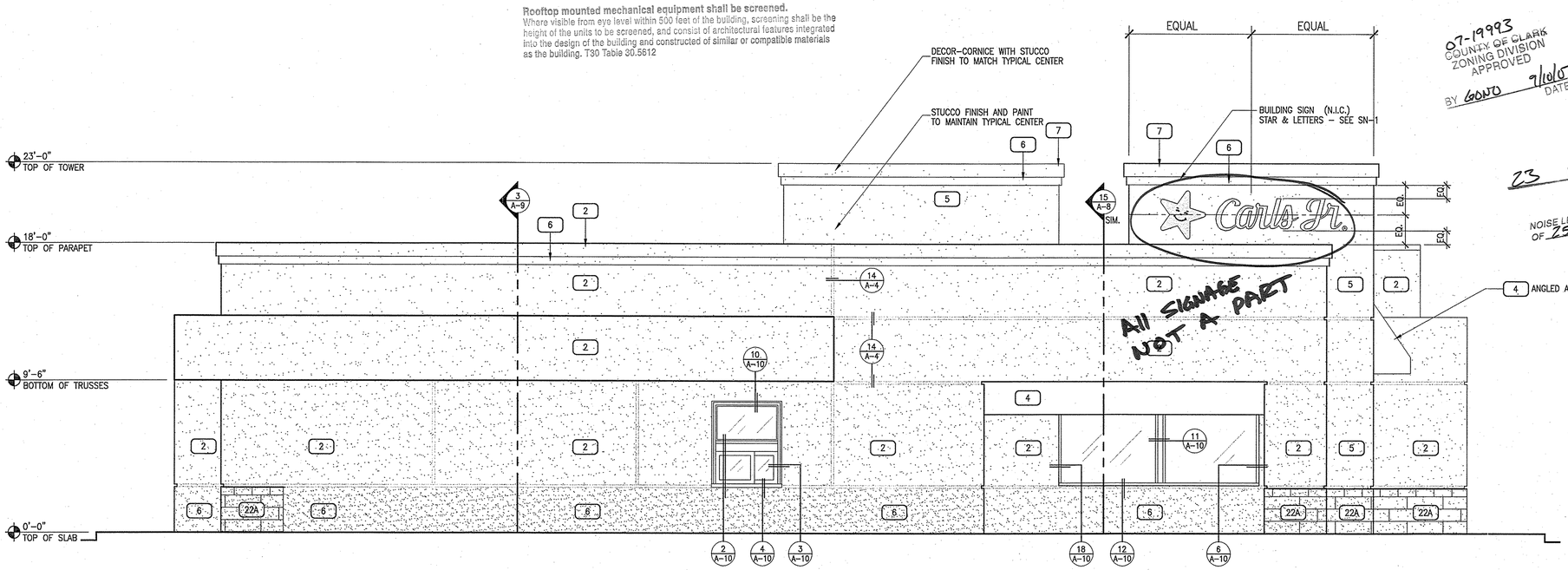

07-19993
COUNTY OF CLARK
ZONING DIVISION
APPROVED
BY GONZO 7/10/07
DATE

23 MAXIMUM HEIGHT

NOISE LEVEL REDUCTION
OF 25 DECIBELS REQUIRED

07-19993--

CLARK COUNTY
DEVELOPMENT SVCS. DEPT.
SEP 17 2007
APPROVED BY:
☐A ☐S ☐M ☐P ☐E

ELEVATION @ DRIVE-THRU WINDOW SIDE (SOUTH) SC: 1/4"=1'-0" (4)

THIS DRAWING IS AN INSTRUMENT OF SERVICE BETWEEN THE ARCHITECT AND HIS CLIENT, BUT REMAINS THE PROPERTY OF THE ARCHITECT.
© ALL RIGHTS RESERVED 2007

architecture/engineering/site
GARY GUY WILSON AIA ARCHITECTS, PC
7625 Dean Martin Drive, Suite#100
Las Vegas, Nevada 89139
planning/interior design
(702)876-0668
professional corp / certified n.c.a.r.b.

CONSULTANTS:
CIVIL: CIVILWORKS, INC.
STRUCTL: WRIGHT ENGINEERS
ELEC: SH NEVADA
MECH: SH NEVADA

CARL'S JR RESTAURANT
@ RUSSELL ROAD & EASTERN AVE.
McCARRAN MARKETPLACE
FOR: S.L. INVESTMENTS, MR. STEVE LARSON
CLARK COUNTY, NEVADA

PROJ.NO.	13520701.00
PROJ.ARCH.	G.G.WILSON,AIA
PROJ.MGR	MVM
JOB CAPT	MVM
TECH'N	VAN/EMD
ARCH.CHK	GGW
PH-2/3	02FEB07
PH-4	30MAR07
PH-5	02MAY07

REVISIONS
1 .....
2
3
4
5
6

PRINTS REQUIRE ARCHITECT'S SEAL & SIGN. FOR PROOF OF VALIDITY
GARY G. WILSON REGISTERED No. 545 ARCHITECT NEVADA
APR 19 2007

EXTERIOR ELEVATIONS

SHT.NO. A-5

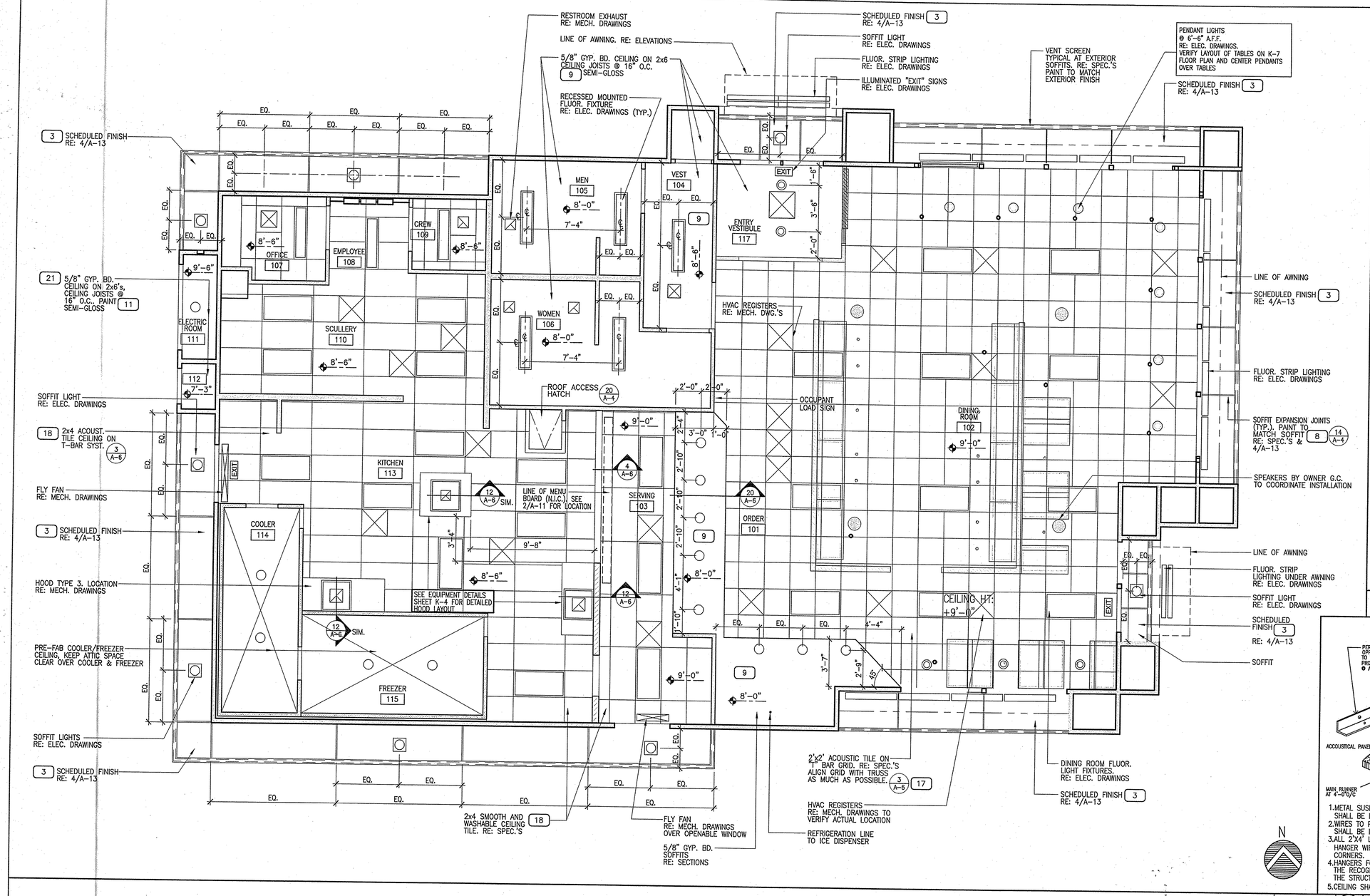

LIGHTING FIXTURES

1. ALL LIGHTING FIXTURES SHALL BE POSITIVELY ATTACHED TO THE SUSP. CEILING SYSTEM. THE ATTACHMENT DEVICE SHALL HAVE A CAPACITY OF 100 % OF THE LIGHTING FIXTURE WEIGHT ACTING IN ANY DIRECTION No.12 GA. HANGERS SHALL BE ATTACHED TO THE GRID MEMBERS WITHIN 3" OF EACH CORNER OF EACH FIXTURE. TANDEM FIXTURES MAY UTILIZE COMMON WIRES.
2. LIGHTING FIXTURE WEIGHING LESS THAN 56 LBS. SHALL HAVE, IN ADDITION TO THE REQUIREMENTS OUTLINED ABOVE, TWO No.12 GA. HANGERS CONNECTED FROM THE FIXTURE HOUSING TO THE STRUCTURE ABOVE. THESE WIRES MAY BE SLACK.
3. LIGHTING FIXTURES 56 LBS. OR MORE SHALL BE SUPPORTED DIRECTLY FROM THE STRUCTURE ABOVE BY APPROVED HANGERS.
4. PENDANT-HUNG LIGHTING FIXTURES SHALL BE SUPPORTED DIRECTLY FROM THE STRUCTURE ABOVE USING No. 9 GA. WIRE OR APPROVED ALTERNATE SUPPORT WITHOUT USING THE CEILING SUSPENSION SYSTEM FOR DIRECT SUPPORT.

LIGHT FIXTURE NOTES — SC: NONE — 1

NOTES

1. LOUVERS, AND PANEL FRONTS SHALL BE SPRAY PAINTED TO MATCH ADJACENT SURFACES, INCLUDING FACTORY FINISHED ITEMS. NO BRUSH PAINTING OF THESE ITEMS WILL BE PERMITTED.
2. ALL EXPOSED GYPSUM BOARD SHALL BE SEALED WITH ONE COAT OF SEALER AND FOLLOWED BY TWO COATS SEMI-GLOSS ENAMEL WITH STIPPLED FINISH. (RE: SPECS.)
3. FOR DETAILS NOT CALLED OUT ON REFLECTED CEILING PLAN, SEE INTERIOR ROOM ELEVATIONS.
4. REFER TO SECTIONS AND DETAILS FOR VERIFICATIONS OF ALL CEILING HEIGHTS.
5. PROVIDE EXPANSION SCREEDS IN EXTERIOR SOFFIT AS SHOWN.
6. CEILING HEIGHTS SHOWN ARE FROM FINISHED CEILING SURFACE TO FINISH CONCRETE FLOOR.
7. LOCATE ALL LIGHTS AND CEILING REGISTERS SYMMETRICALLY CENTERED OVER DOORS, WINDOWS OR BAYS OF CEILING DESIGN AS INDICATED.
8. REFER TO MECH. DRAWINGS FOR ALL REGISTERS AND DIFFUSERS.
9. REFER TO ELEC. DRAWINGS FOR ALL LIGHTING FIXTURES.
10. REF. 4/A-13 FOR CEILING MATERIAL.

GENERAL NOTES — SC: NONE — 2

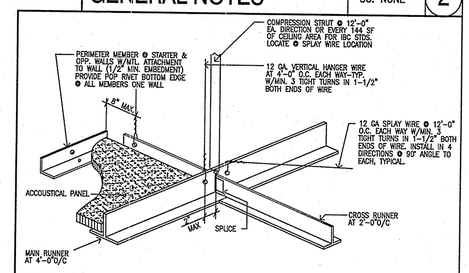

1. METAL SUSPENSION SYSTEMS FOR ACOUSTICAL TILE AND FOR LAY-IN PANEL CEILINGS SHALL BE INSTALLED IN ACCORDANCE WITH INTERNATIONAL BUILDING CODE CHAPTER 16.
2. WIRES TO PENDANT MOUNTED LIGHT FIXTURES SHALL BE 9 GA AND LIGHT FIXTURES SHALL BE INDEPENDANTLY SUPPORTED BY THE BUILDING STRUCTURE.
3. ALL 2'X4' LIGHT FIXTURES AND 2'X2' HVAC REGISTERS SHALL BE SUPPORTED BY 12 GA HANGER WIRES W/3" OF EACH CORNER AND TWO (2) HANGER WIRES (SLACK) AT DIAGONAL CORNERS. CEILING SYSTEM SHALL NOT SUPPORT OTHER ITEMS.
4. HANGERS FOR SUSPENDED CEILINGS SHALL BE NOT LESS THAN THE SIZES SET FORTH IN THE RECOGNIZED EDITION OF THE INTERNATIONAL BUILDING, FASTENED TO OR EMBEDED IN THE STRUCTURAL FRAMING, MASONRY OR CONCRETE.
5. CEILING SHALL COMPLY WITH ASTM C 635, ASTM C 636 AND CISCA REQUIREMENTS

REFLECTED CEILING PLAN — SC: 1/4"=1'-0" — 7

SUSPENDED CLG. DET. — SC: NONE — 3

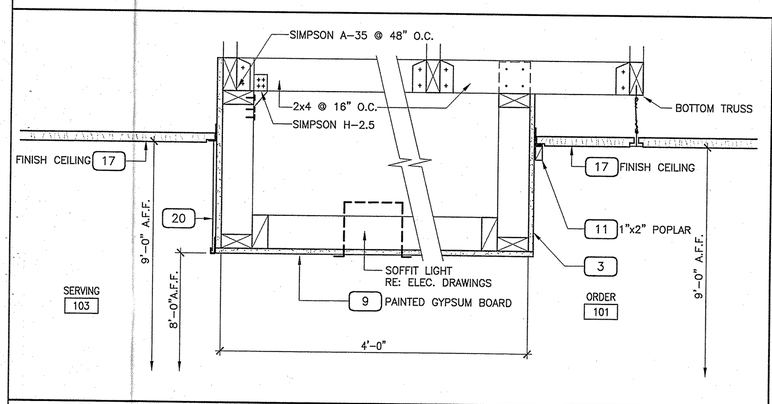

ORDER COUNTER SOFFIT — SC: 1 1/2"=1'-0" — 20

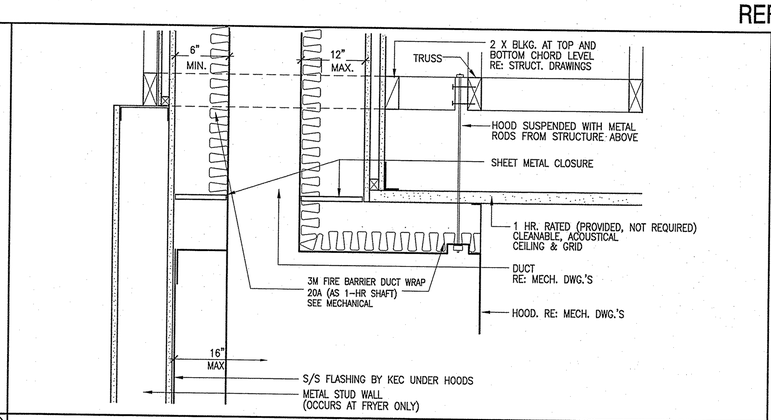

SHAFT — SC: 1 1/2"=1'-0" — 12

CLARK COUNTY DEVELOPMENT SVCS. DEPT.
SEP 17 2007
APPROVED BY: ☐A ☐S ☐M ☐P ☐E

07-19993--

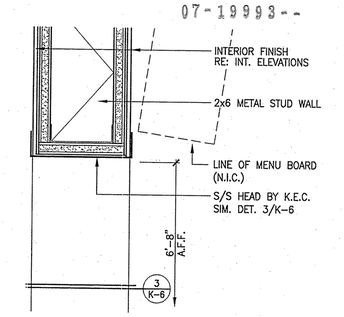

HEAD — SC: 3"=1'-0" — 4

THIS DRAWING IS AN INSTRUMENT OF SERVICE BETWEEN THE ARCHITECT AND HIS CLIENT, BUT REMAINS THE PROPERTY OF THE ARCHITECT.
© ALL RIGHTS RESERVED 2007

planning/interior design
GARY GUY WILSON ARCHITECTS, PC
(702)876-0668
professional corp / certified n.c.a.r.b.
architecture/engineering/site
7625 Dean Martin Drive, Suite#100
Las Vegas, Nevada 89139

CONSULTANTS:
CIVIL: CIVILWORKS, INC. ELEC: SH NEVADA
STRUCTL: WRIGHT ENGINEERS MECH: SH NEVADA

CARL'S JR RESTAURANT
@ RUSSELL ROAD & EASTERN AVE.
McCARRAN MARKETPLACE
FOR: S.L. INVESTMENTS, MR. STEVE LARSON
CLARK COUNTY, NEVADA

PROJ.NO.	13520701.00
PROJ.ARCH.	G.G.WILSON,AIA
PROJ.MGR	MVM
JOB CAPT	MVM
TECH'N	VAN/EMD
ARCH.CHK	GGW
PH-2/3	02FEB07
PH-4	30MAR07
PH-5	02MAY07

REVISIONS

PRINTS REQUIRE ARCHITECT'S SEAL & SIGN. FOR PROOF OF VALIDITY

GARY G. WILSON REGISTERED No. 545 ARCHITECT STATE OF NEVADA
APR 3 0 2007

REFLECTED CEILING PLAN & DETAILS

SHT.NO. A-6

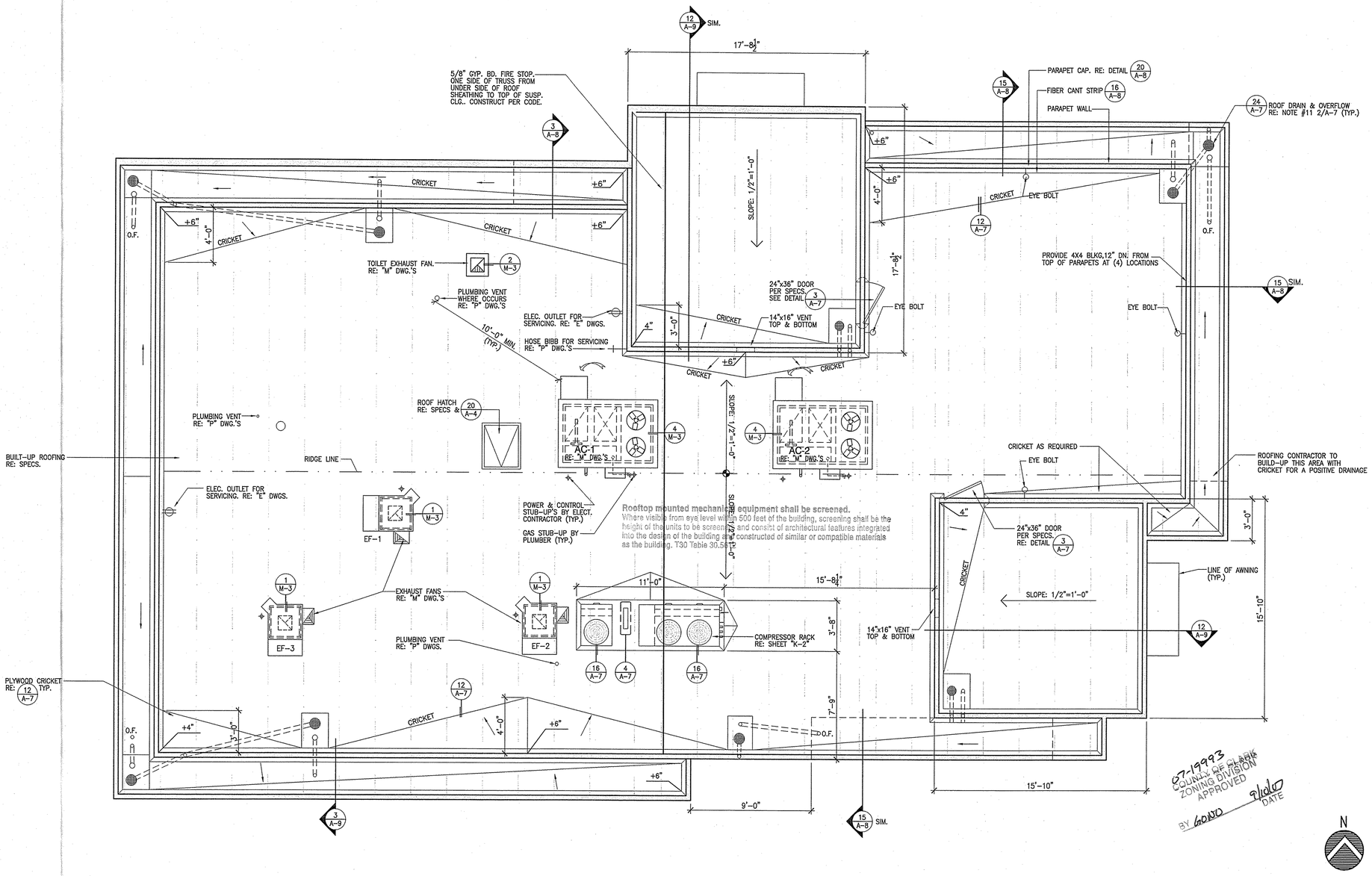

NOTES

1. FOR ADDITIONAL INFORMATION AND EXACT LOCATIONS OF ALL AIRCONDITIONING EQUIPMENT PLATFORMS, PADS AND ROOF PENETRATIONS OR OPENINGS. RE: MECH. DRAWINGS
2. FOR ALL STRUCTURAL FRAMING MEMBERS, SIZES, AND ADDITIONAL INFORMATION. RE: STRUCT. DRAWINGS
3. SEE SPECIFICATIONS FOR INSTALLATION INSTRUCTIONS OF THE BUILT UP ROOFING, MANSARD FINISH COVERING, AND THE UNDERLAYMENT.
4. +6" INDICATES APPROXIMATE ELEVATION OF HIGH POINT OF ROOF PLYWOOD SHEATHING AT CRICKET.
5. ANY PROJECTION THROUGH ROOF MUST HAVE A ROOF JACK AND COUNTER FLASHING HOT MOPPED INTO ROOFING. THIS INCLUDES ALL CONDUITS, PIPES, STRUCTURAL ELEMENTS, PVC LINES, ETC. SURFACE APPLICATIONS OF ROOF JACKS WILL NOT BE PERMITTED. RE: 8/A-7
6. ALL EQUIPMENT PLATFORMS SHALL BE BUILT LEVEL.
7. ALL EXHAUST FANS AND AIR CONDITIONING EQUIPMENT DESIGNATIONS ARE TAKEN FROM MECHANICAL DRAWINGS.
8. ALL SHEET METAL COVERS ON EQUIPMENT PLATFORMS AND ALL COPING METAL, SHALL BE OF 24 GA. G.I. SHEET METAL WITH ALL SEAMS CAULKED INCLUDING CORNERS. ALL SHEET METAL SHALL BE SHOP PRIMED USING (1) COAT OF "RUST-OLEUM" GALVINOLEUM, 3203 UNDER COAT CLEAR BLUE TINT. SEE SHEET METAL SPECIFICATIONS.
9. THERE SHALL BE NO PENETRATIONS THRU MANSARD ROOF (IF OCCURS)
10. ALL WOOD NAILERS, STRIPPING, BLOCKS, ETC... REQUIRED FOR INSTALLATION OF CONCRETE ROOF TILE, IF OCCURS, SHALL BE FURNISHED AND INSTALLED BY ROOFING CONTRACTOR AND INSTALLED PER MANUFACTURERS' LATEST SPECIFICATIONS.
11. 3" OR 4" STORM DRAIN THRU CURB FACE AND OVERFLOW DRAIN THROUGH SOFFIT, CUT PIPING FLUSH WITH CURB. RE: PLUMB. DRAWINGS FOR SIZE AND LOCATION.
12. ROOF EQUIPMENT MUST NOT BE VISIBLE FROM STREET.
13. ALL VENT PIPES TO BE FLUSH WITH TO OF PARAPET.
14. PROVIDE (4) 1/2" EYE BOLTS AFTER COMPLETION OF PARAPET AS SHOWN (TYPICAL AT EYE BOLTS).
15. MINIMUM ROOF SLOPE AT THE PERIMETER CANOPY ROOFS SHALL BE 2%

GENERAL NOTES

SCALE: NONE (2)

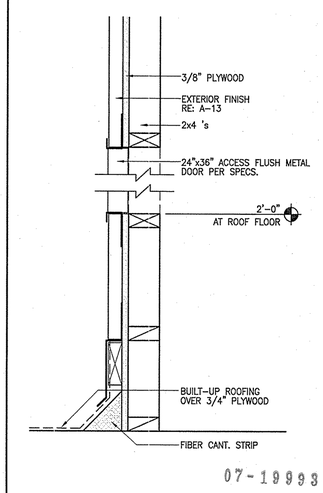

07-19993

ACCESS DOOR DETAIL SC: N.T.S. (3)

ROOF PLAN SC: 1/4"=1'-0" (7)

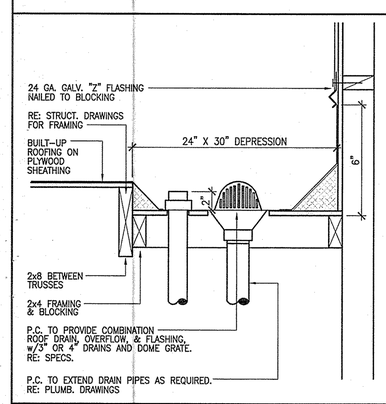

ROOF DRAIN DETAIL SC: 1 1/2"=1'-0" (24)

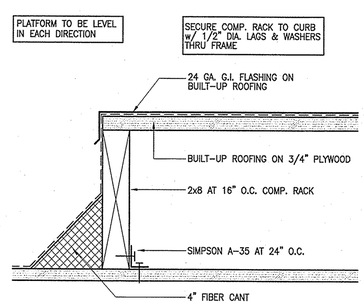

EQUIPMENT PLATFORM SC: 3"=1'-0" (16)

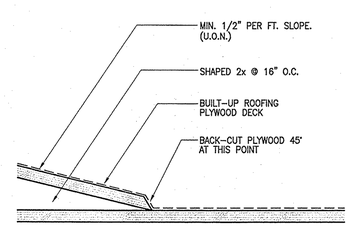

CRICKET SC: 3"=1'-0" (12)

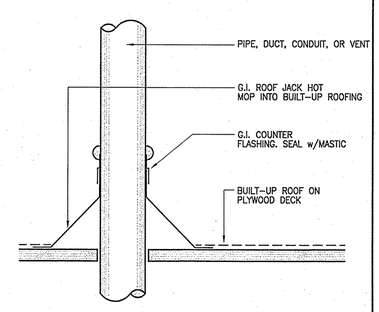

ROOF JACK SC: 3"=1'-0" (8)

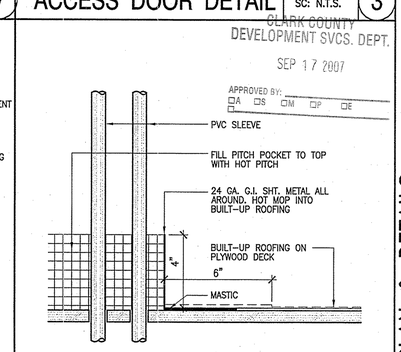

CLARK COUNTY DEVELOPMENT SVCS. DEPT. SEP 17 2007 APPROVED BY: ☐A ☐S ☐M ☐P ☐E

PITCH POCKET SC: 3"=1'-0" (4)

THIS DRAWING IS AN INSTRUMENT OF SERVICE. BETWEEN THE ARCHITECT AND HIS CLIENT, BUT REMAINS THE PROPERTY OF THE ARCHITECT.
(C) ALL RIGHTS RESERVED 2007

planning/interior design
ARCHITECTS,PC
(702)876-0668
professional corp / certified n.c.a.r.b.
architecture/engineering/site
GARY GUY WILSON
7625 Dean Martin Drive, Suite#100
Las Vegas, Nevada 89139

CONSULTANTS:
CIVIL: CIVILWORKS, INC. ELEC: SH NEVADA
STRUCTL: WRIGHT ENGINEERS MECH: SH NEVADA

CARL'S JR RESTAURANT
© RUSSELL ROAD & EASTERN AVE.
McCARRAN MARKETPLACE
FOR: S.L. INVESTMENTS, MR. STEVE LARSON
CLARK COUNTY, NEVADA

PROJ.NO.	13520701.00
PROJ.ARCH.	G.G.WILSON,AIA
PROJ.MGR.	MVM
JOB CAPT.	MVM
TECH'N	VAN/EMD
ARCH.CHK	GGW
PH-2/3	02FEB07
PH-4	30MAR07
PH-5	02MAY07

REVISIONS
1 .....

PRINTS REQUIRE ARCHITECT'S SEAL & SIGN. FOR PROOF OF VALIDITY

GARY G. WILSON REGISTERED No. 545 ARCHITECT STATE OF NEVADA
APR 13 2007

ROOF PLAN & DETAILS

SHT.NO. A-7

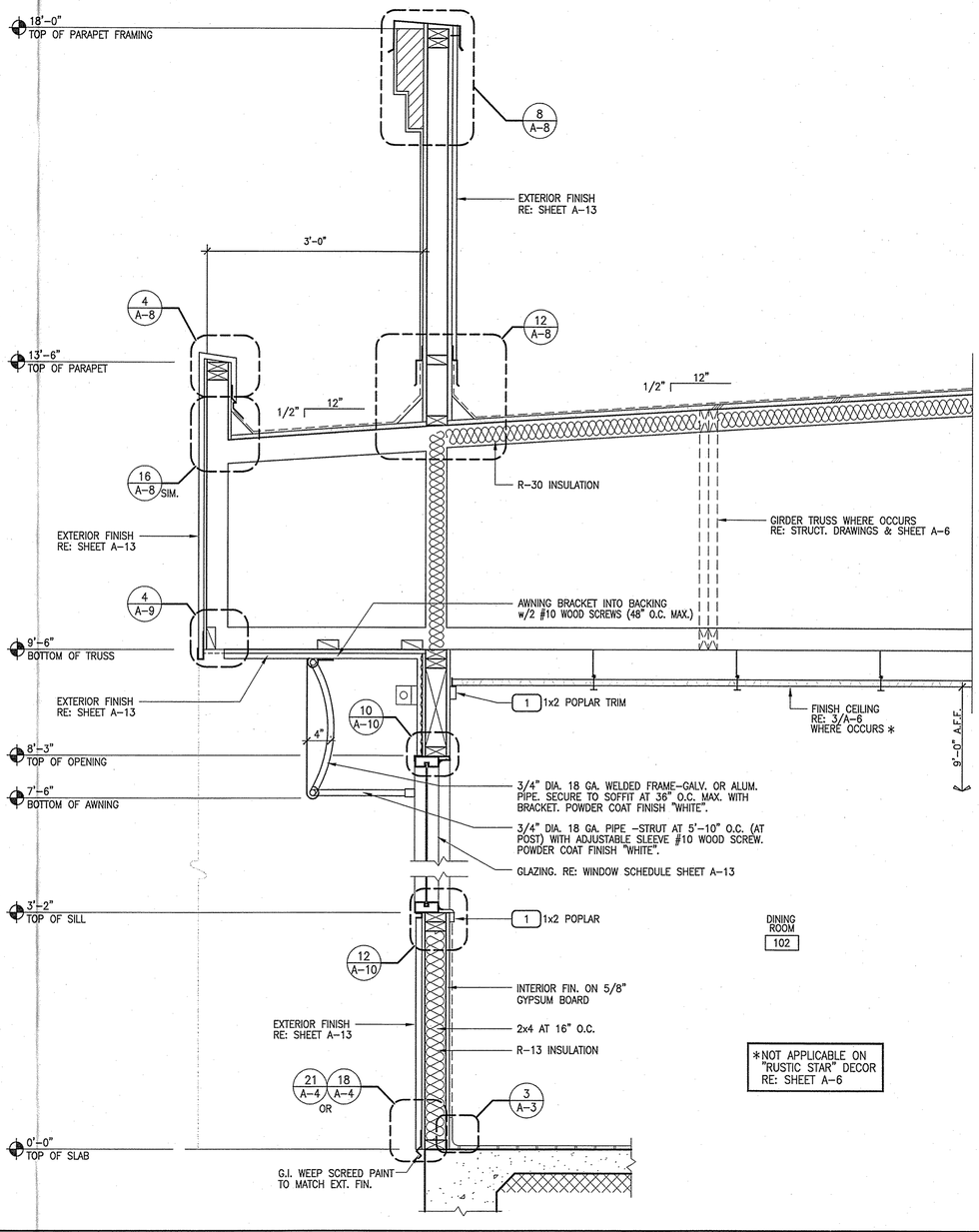

*NOT APPLICABLE ON
"RUSTIC STAR" DECOR
RE: SHEET A-6

WALL SECTION SCALE: 1"=1-0" 15

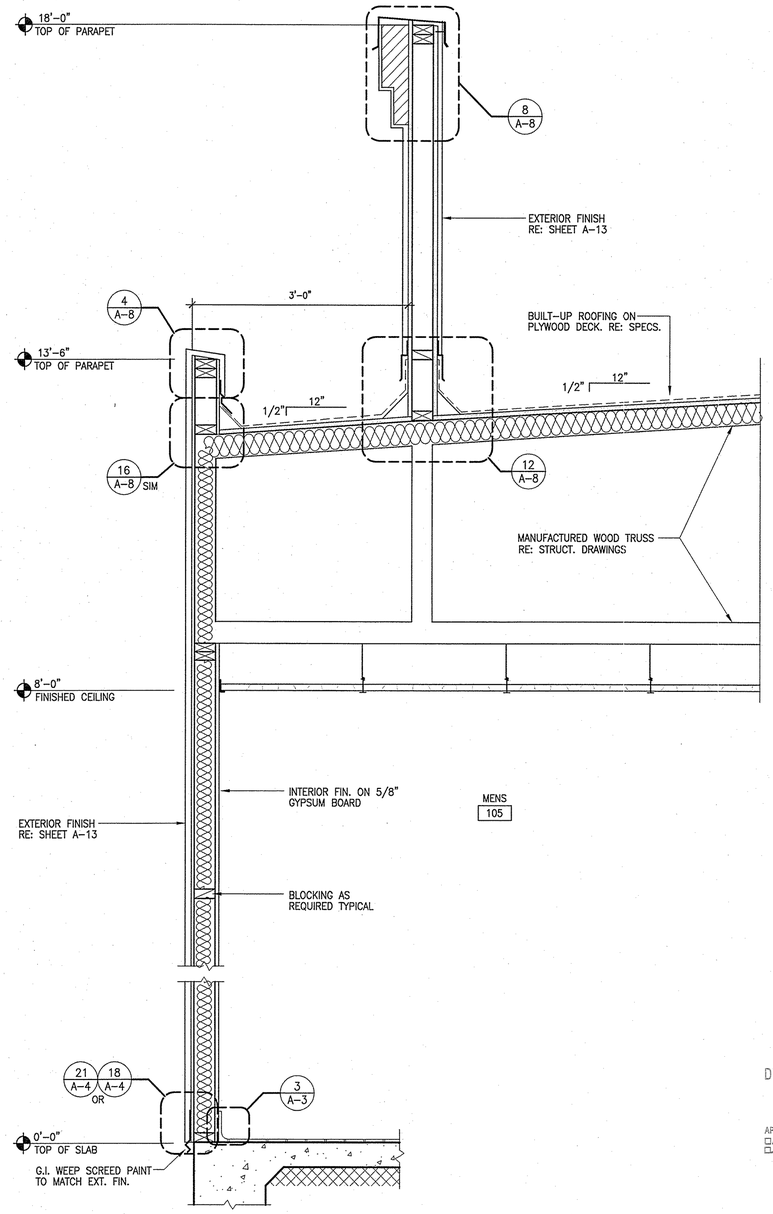

CLARK COUNTY
DEVELOPMENT SVCS. DEPT.
SEP 17 2007
APPROVED BY:
☐A ☐S ☐M ☐P ☐E
07-19993--

WALL SECTION SCALE: 1"=1-0" 3

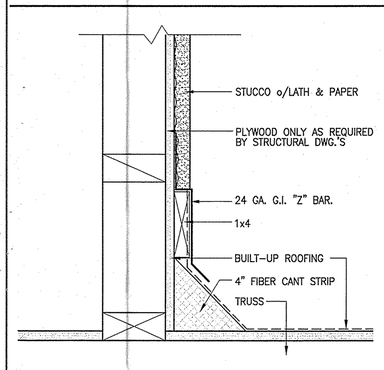

TOWER BASE SCALE: 3"=1'-0" 24

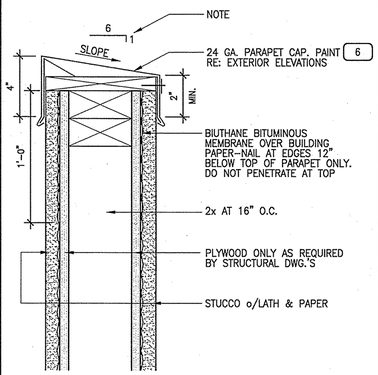

PARAPET CAP SCALE: 3"=1-0" 20

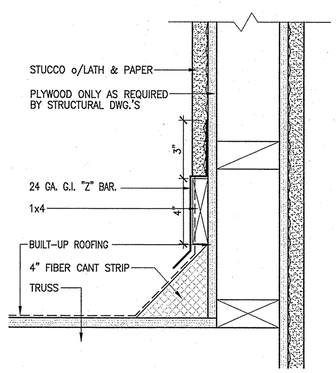

CANT STRIP SCALE: 3"=1-0" 16

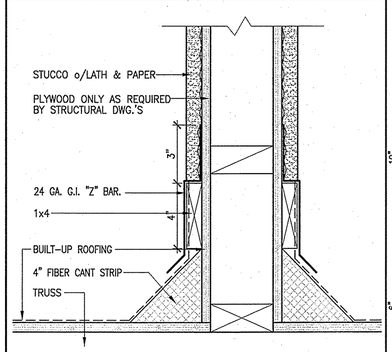

PARAPET WALL BASE SCALE: 3"=1-0" 12

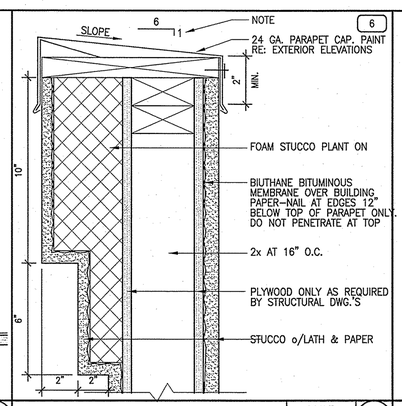

CORNICE DETAIL SCALE: 1"=1'-0" 8

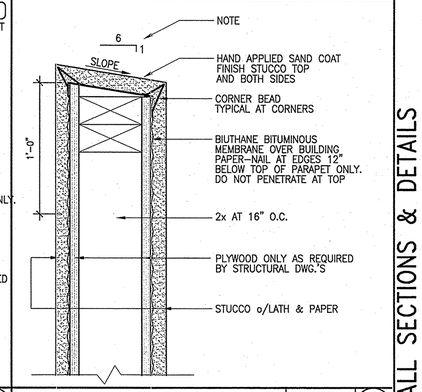

LOW PARAPET CAP SCALE: 3"=1-0" 4

THIS DRAWING IS AN INSTRUMENT OF SERVICE BETWEEN THE ARCHITECT AND HIS CLIENT, BUT REMAINS THE PROPERTY OF THE ARCHITECT.
© ALL RIGHTS RESERVED 2007

planning/interior design
GARY-GUY-WILSON ARCHITECTS,PC
(702)876-0668
professional corp./certified n.c.a.r.b.
architecture/engineering/site
7625 Dean Martin Drive, Suite#100
Las Vegas, Nevada 89139

CONSULTANTS:
CIVIL: CIVILWORKS, INC. ELEC: SH NEVADA
STRUCTL: WRIGHT ENGINEERS MECH: SH NEVADA

CARL'S JR RESTAURANT
@ RUSSELL ROAD & EASTERN AVE.
McCARRAN MARKETPLACE
FOR: S.L. INVESTMENTS, MR. STEVE LARSON
CLARK COUNTY, NEVADA

PROJ.NO.	13520701.00
PROJ.ARCH.	G.G.WILSON,AIA
PROJ.MGR	MVM
JOB CAPT	MVM
TECH'N	VAN/EMD
ARCH.CHK	GGW
PH-2/3	02FEB07
PH-4	30MAR07
PH-5	02MAY07

REVISIONS
1 .....

PRINTS REQUIRE ARCHITECT'S SEAL & SIGN. FOR PROOF OF VALIDITY

GARY G. WILSON REGISTERED No. 545 ARCHITECT STATE OF NEVADA
APR 18 2007

WALL SECTIONS & DETAILS

SHT.NO. A-8

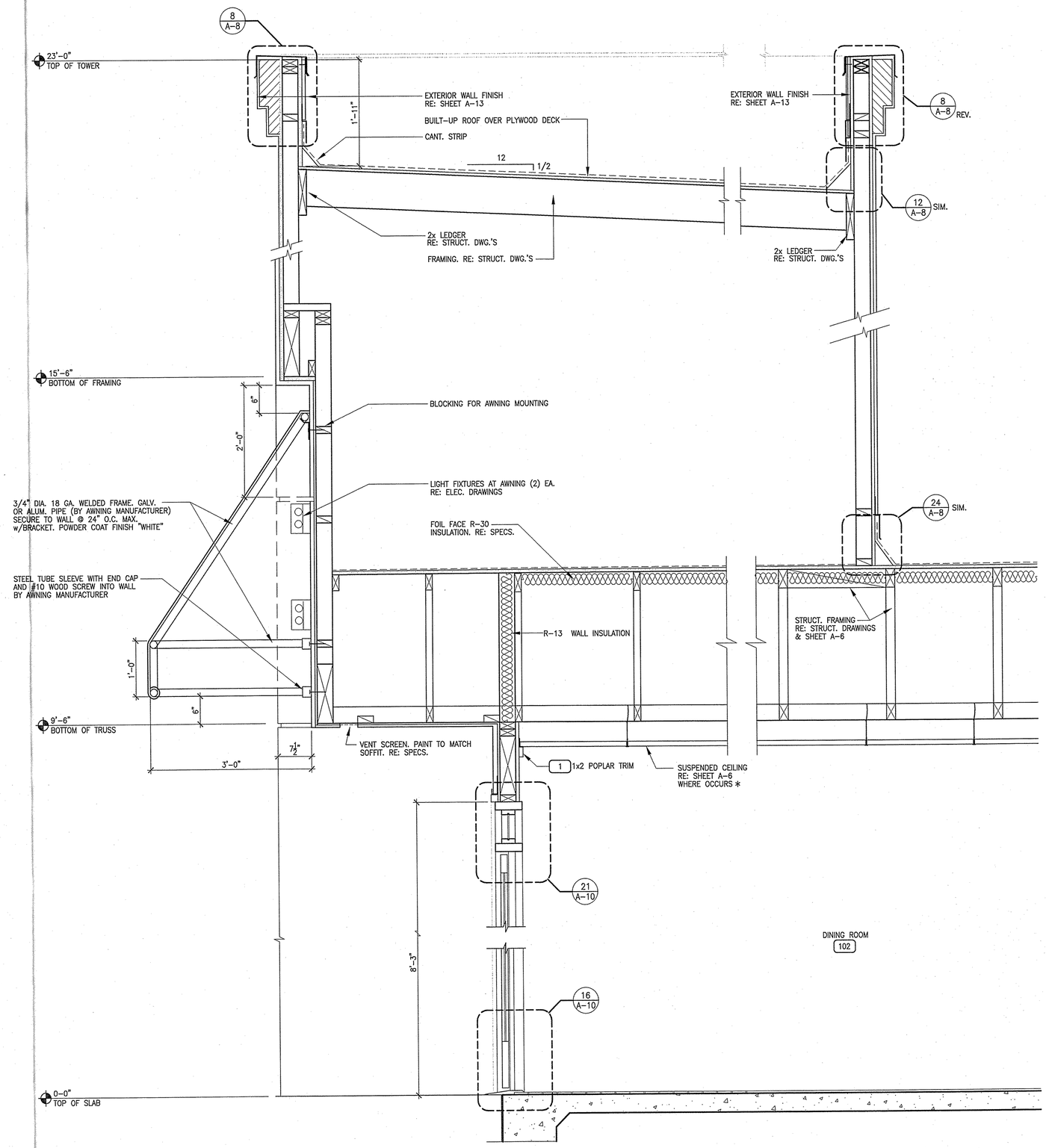

WALL SECTION @ TOWER — SCALE: 1"=1-0" — 12

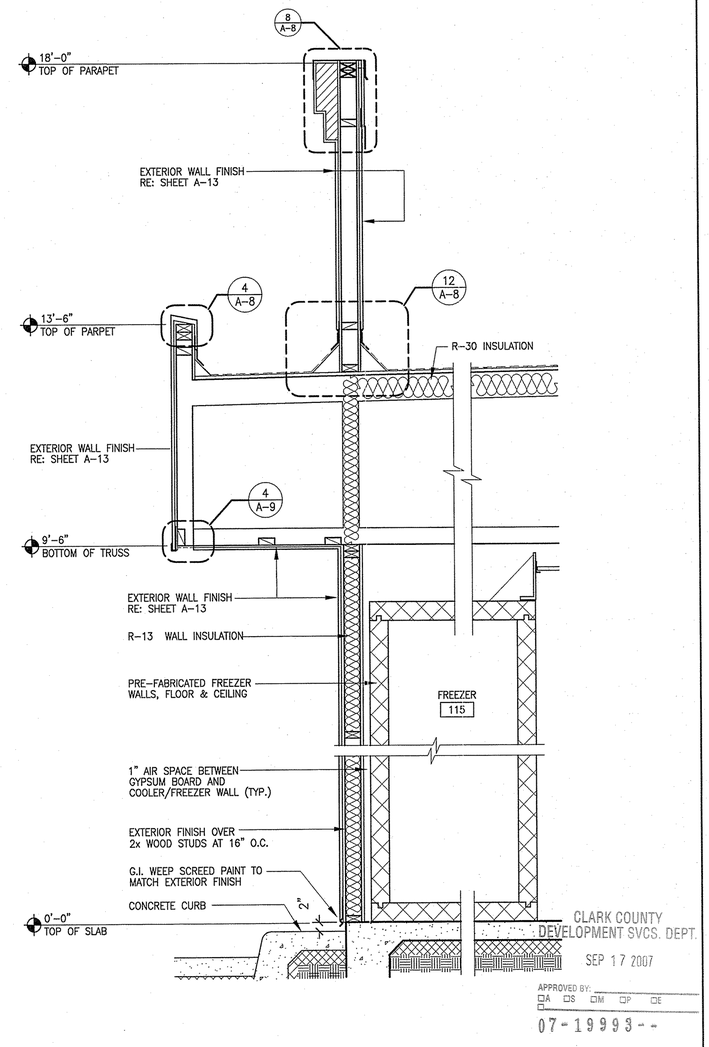

CLARK COUNTY
DEVELOPMENT SVCS. DEPT.
SEP 17 2007
APPROVED BY:
☐A ☐S ☐M ☐P ☐E
07-19993--

WALL SECTION — SCALE: 3/4"=1-0" — 3

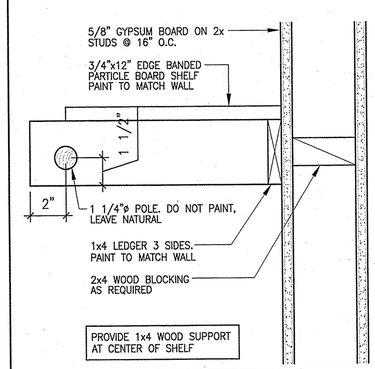

SHELF & POLE — SCALE: 3"=1-0" — 8

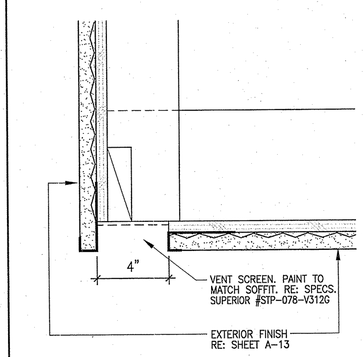

VENT SCREEN — SCALE: 3"=1'-0" — 4

THIS DRAWING IS AN INSTRUMENT OF SERVICE BETWEEN THE ARCHITECT AND HIS CLIENT, BUT REMAINS THE PROPERTY OF THE ARCHITECT.
© ALL RIGHTS RESERVED 2007

architecture/engineering/site
GARY-GUY WILSON
7625 Dean Martin Drive, Suite#100
Las Vegas, Nevada 89139
planning/interior design
AA ARCHITECTS, PC
(702)876-0668
professional corp / certified n.c.a.r.b.

CONSULTANTS:
CIVIL: CIVILWORKS, INC. ELEC: SH NEVADA
STRUCTL: WRIGHT ENGINEERS MECH: SH NEVADA

CARL'S JR RESTAURANT
@ RUSSELL ROAD & EASTERN AVE.
McCARRAN MARKETPLACE
FOR: S.L. INVESTMENTS, MR. STEVE LARSON
CLARK COUNTY, NEVADA

PROJ.NO.	13520701.00
PROJ.ARCH.	G.G.WILSON,AIA
PROJ.MGR	MVM
JOB CAPT	MVM
TECH'N	VAN/EMD
ARCH.CHK	GGW
PH-2/3	02FEB07
PH-4	30MAR07
PH-5	02MAY07

REVISIONS
1
2
3
4
5
6

PRINTS REQUIRE ARCHITECT'S SEAL & SIGN. FOR PROOF OF VALIDITY

GARY G. WILSON
REGISTERED
No. 543
STATE OF NEVADA
ARCHITECT
APR 19 2007

WALL SECTIONS & DETAILS

SHT.NO. A-9

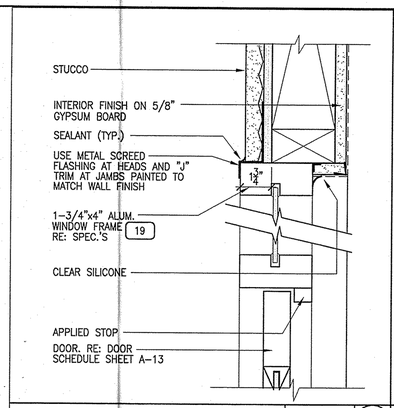

HEAD / TRANSOM — SCALE: 3"=1-0" — 21

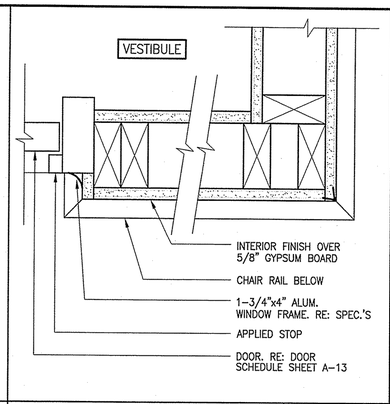

JAMB @ VESTIBULE — SCALE: 3"=1-0" — 17

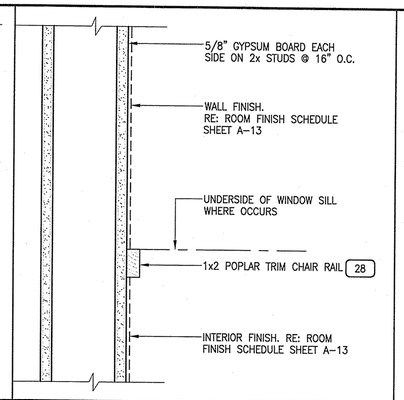

CHAIR RAIL — SCALE: 3"=1-0" — 13

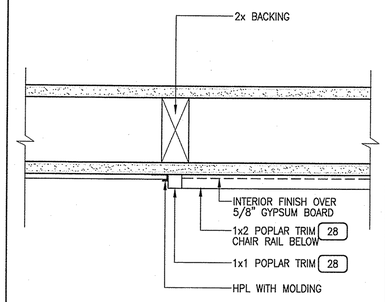

TRIM — SCALE: 3"=1-0" — 9

... — SCALE ... — .

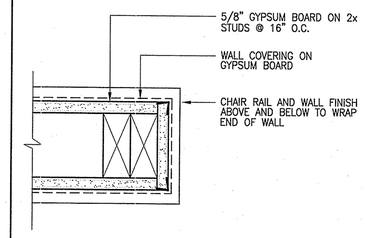

END WALL — SCALE: 3"=1-0" — 1

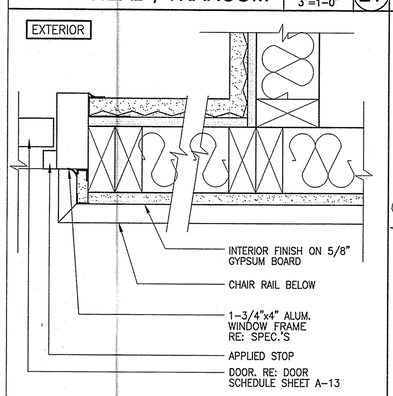

JAMB — SCALE: 3"=1-0" — 22

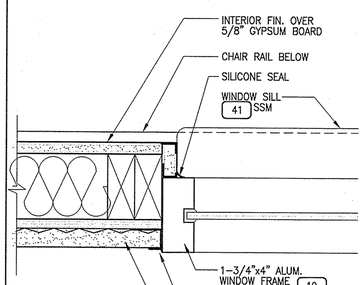

JAMB — SCALE: 3"=1-0" — 18

... — SCALE .... — 14

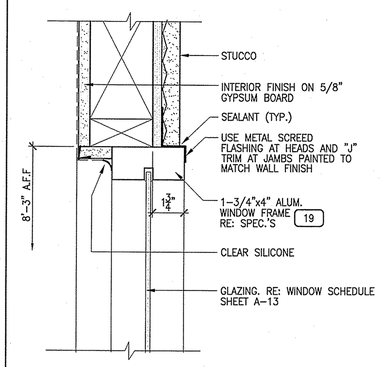

HEAD / JAMB SIMILAR — SCALE: 3"=1-0" — 10

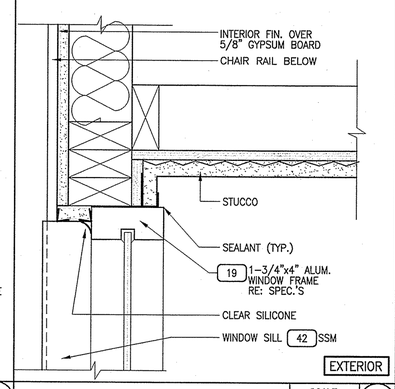

JAMB — SCALE: 3"=1-0" — 6

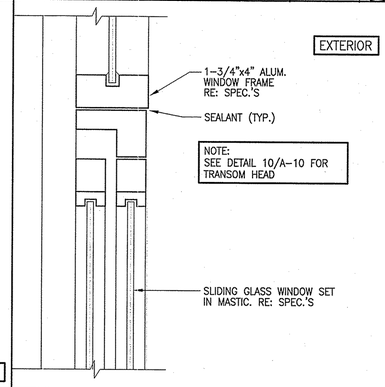

HEAD — SCALE: 3"=1-0" — 2

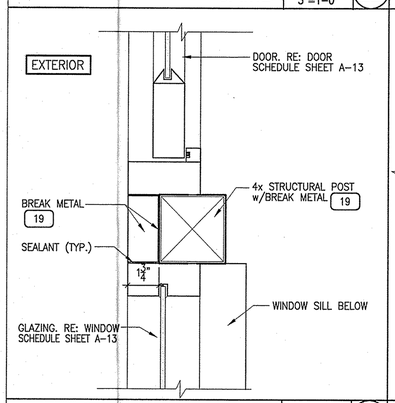

JAMB — SCALE: 3"=1-0" — 23

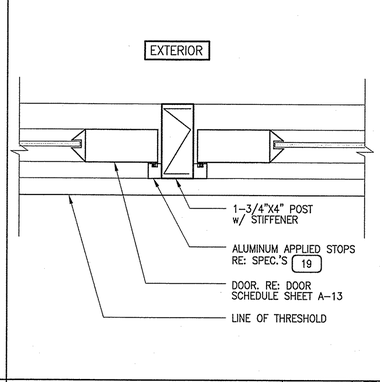

CENTER POST — SCALE: 3"=1-0" — 19

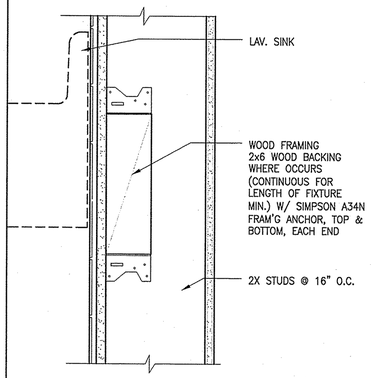

LAVATORY BACKING — SCALE: 3"=1-0" — 15

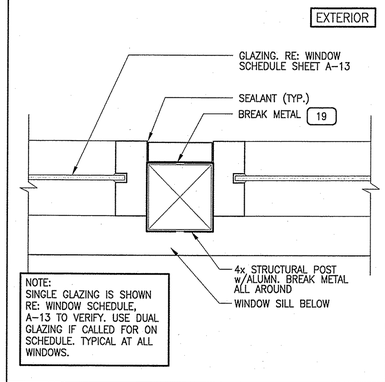

JAMB @ POST — SCALE: 3"=1-0" — 11

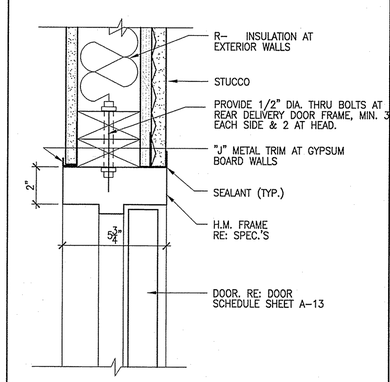

HEAD / JAMB SIMILAR — SCALE: 3"=1-0" — 7

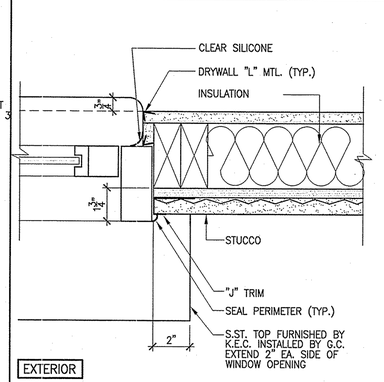

JAMB — SCALE: 3"=1-0" — 3

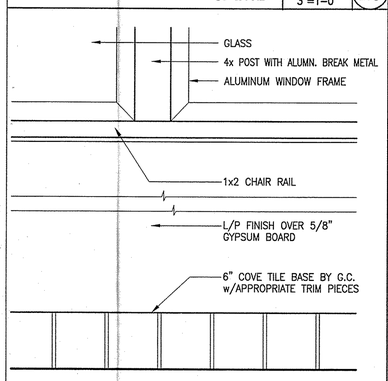

WALL ELEV. DETAIL — SCALE: N.T.S — 24

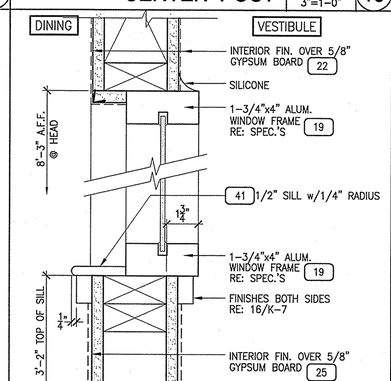

HEAD & SILL @ VESTIBULE — SCALE: 3"=1-0" — 20

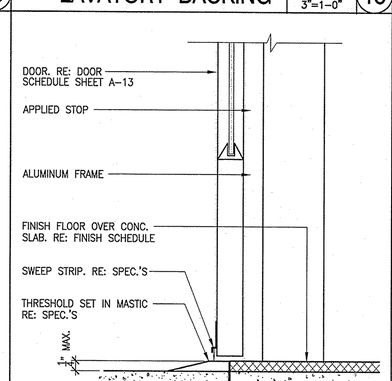

THRESHOLD — SCALE: 3"=1-0" — 16

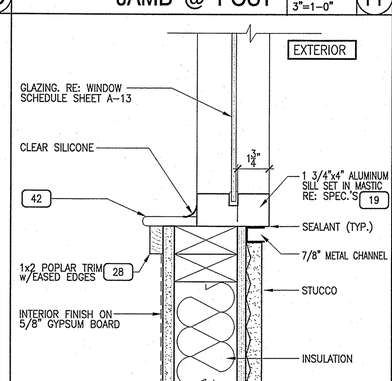

SILL — SCALE: 3"=1-0" — 12

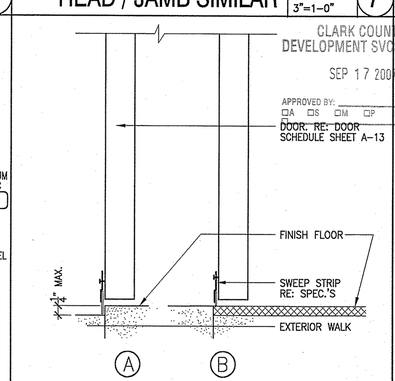

THRESHOLD — SCALE: 3"=1-0" — 8

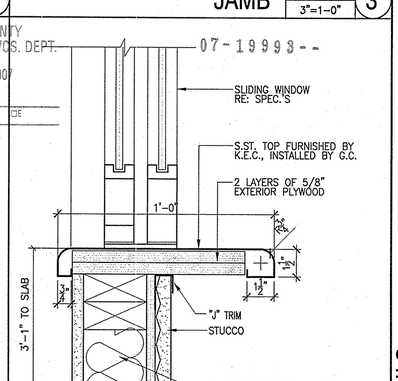

SILL — SCALE: 3"=1-0" — 4

DETAILS

THIS DRAWING IS AN INSTRUMENT OF SERVICE BETWEEN THE ARCHITECT AND HIS CLIENT, BUT REMAINS THE PROPERTY OF THE ARCHITECT.
© ALL RIGHTS RESERVED 2007

planning/interior design
GARY GUY WILSON ARCHITECTS, PC
(702)876-0668
professional corp / certified n.c.e.r.b.
architecture/engineering/site
7625 Dean Martin Drive, Suite 100
Las Vegas, Nevada 89139

CONSULTANTS:
CIVIL: CIVILWORKS, INC.
STRUCTL: WRIGHT ENGINEERS
ELEC: SH NEVADA
MECH: SH NEVADA

CARL'S JR RESTAURANT
@ RUSSELL ROAD & EASTERN AVE.
McCARRAN MARKETPLACE
FOR: S.L. INVESTMENTS, MR. STEVE LARSON
CLARK COUNTY, NEVADA

PROJ.NO.	13520701.00
PROJ.ARCH.	G.G.WILSON,AIA
PROJ.MGR	MVM
JOB CAPT	MVM
TECH'N	VAN/EMD
ARCH.CHK	GGW
PH-2/3	02FEB07
PH-4	30MAR07
PH-5	02MAY07

REVISIONS
1 .....

PRINTS REQUIRE ARCHITECT'S SEAL & SIGN. FOR PROOF OF VALIDITY
GARY G. WILSON REGISTERED No. 545 ARCHITECT NEVADA
APR 18 2007

SHT.NO. A-10

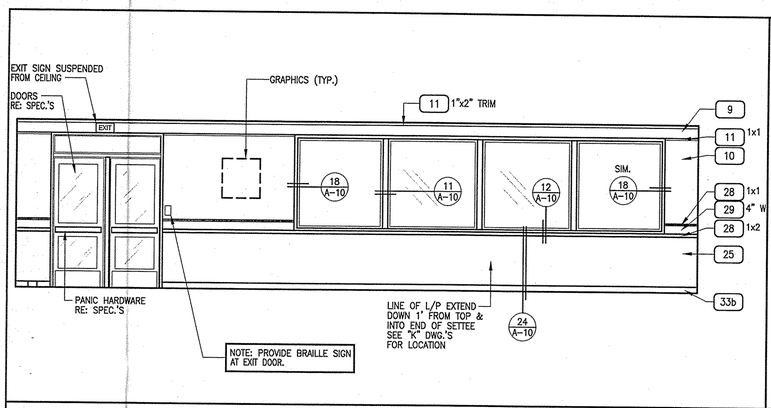

ELEVATION @ DINING ROOM — SCALE: 1/4"=1'-0" — 17

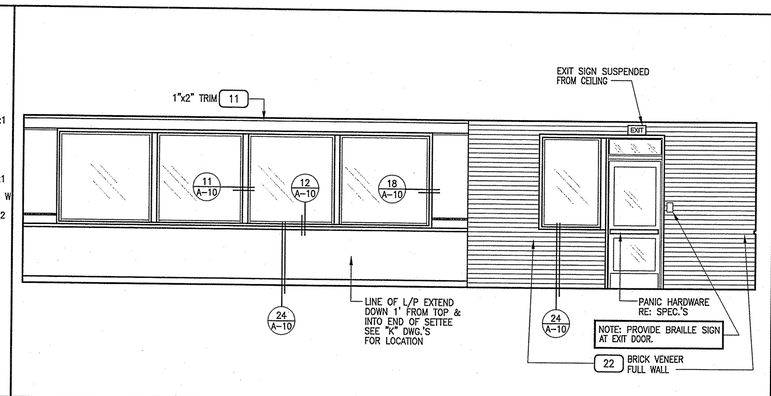

ELEVATION @ DINING ROOM — SCALE: 1/4"=1'-0" — 9

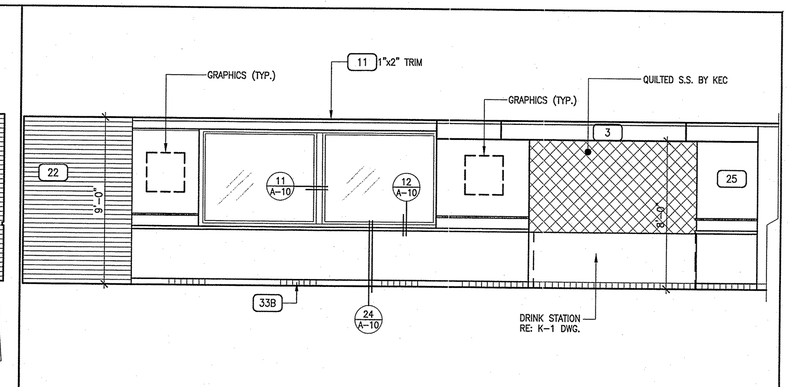

ELEVATION @ DINING ROOM — SCALE: 1/4"=1'-0" — 1

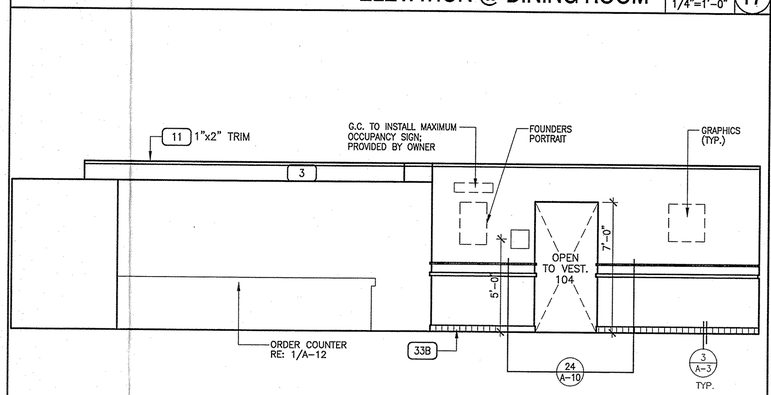

ELEVATION @ DINING ROOM ORDER — SCALE: 1/4"=1'-0" — 18

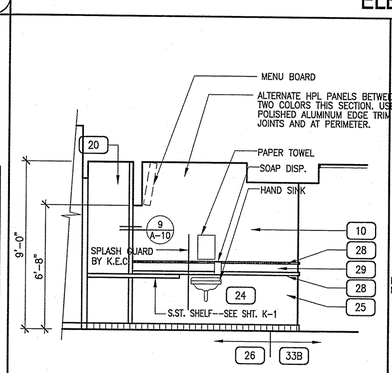

ELEVATION @ SERVING AREA — SCALE: 1/4"=1'-0" — 14

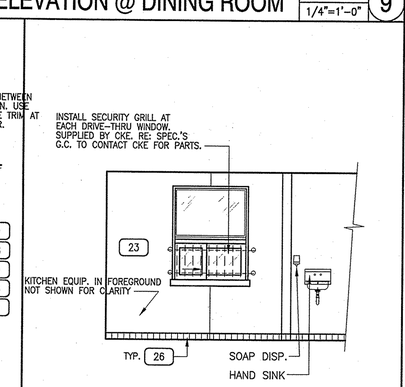

ELEVATION @ SERVING AREA — SCALE: 1/4"=1'-0" — 10

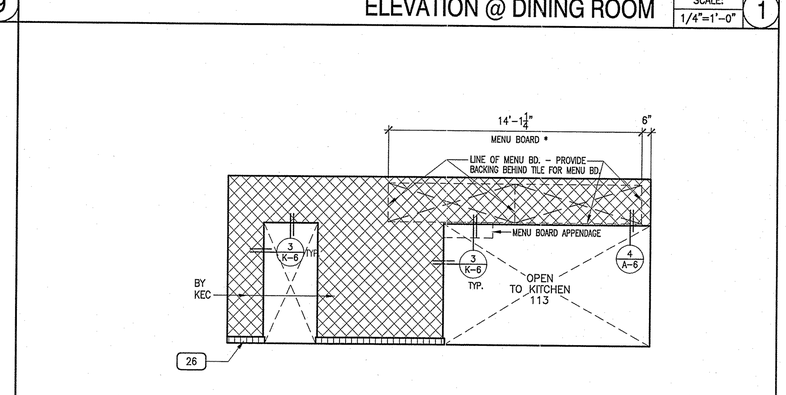

ELEVATION @ SERVING AREA — SCALE: 1/4"=1'-0" — 2

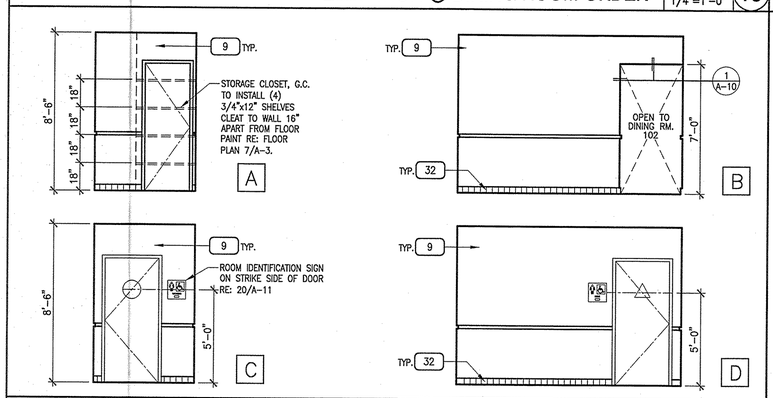

ELEVATION @ RESTROOM VESTIBULE — SCALE: 1/4"=1'-0" — 19

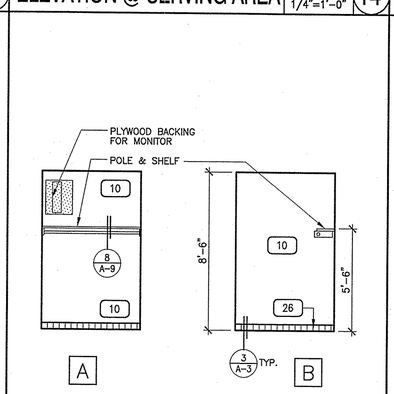

ELEVATION @ CREW ROOM — SCALE: 1/4"=1'-0" — 15

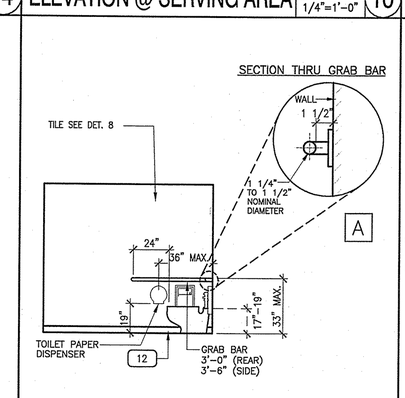

ELEV. @ WOMEN'S TOILET — SCALE: 1/4"=1'-0" — 11

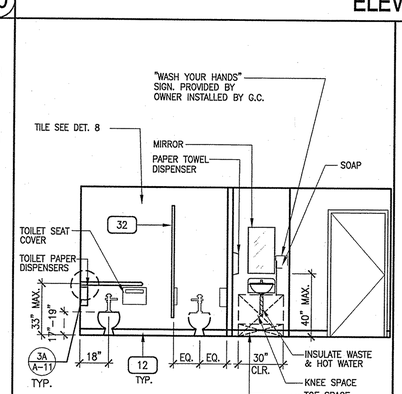

ELEV. @ WOMEN'S TOILET — SCALE: 1/4"=1'-0" — 7

ACCESSIBILITY NOTES:

- MOUNT FLUSH VALVE ON SIDE OF TOILET WITH LARGEST CLEAR AREA AND NO HIGHER THAN 44" A.F.F.
- FORCE TO ACTIVATE FLUSH VALVE SHALL BE NO GREATER THAN 5 LBS OF FORCE.
- FAUCET CONTROLS ARE OF THE TYPE THAT DO NOT REQUIRE TIGHT GRASPING, PINCHING, OR TWISTING OF THE WRIST OR HAVE AN OPENING FORCE OF NOT GREATER THAN 5 POUNDS. (RE: SPEC.'S)

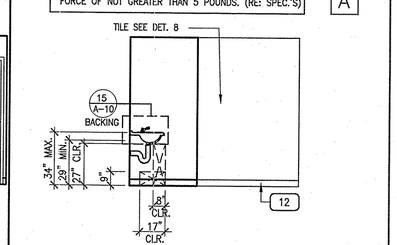

ELEV. @ WOMEN'S TOILET — SCALE: 1/4"=1'-0" — 3

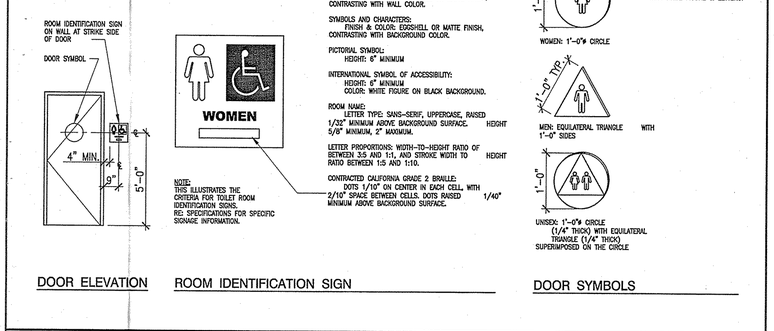

SIGN IDENTIFICATION — SCALE: 1/4"=1'-0" — 20

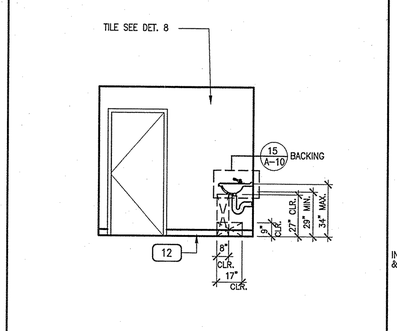

ELEVATION @ MEN'S TOILET — SCALE: 1/4"=1'-0" — 16

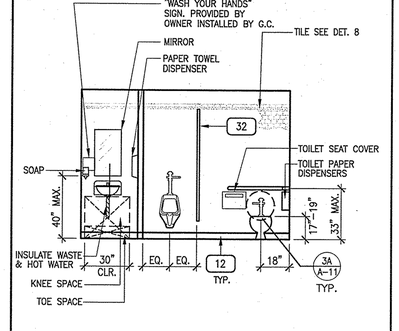

ELEVATION @ MEN'S TOILET — SCALE: 1/4"=1'-0" — 12

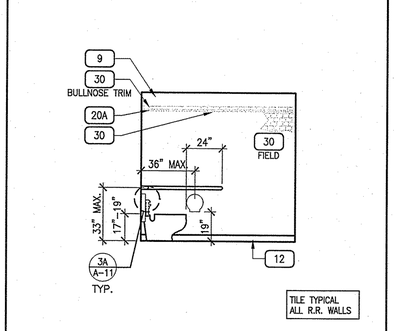

ELEVATION @ MEN'S TOILET — SCALE: 1/4"=1'-0" — 8

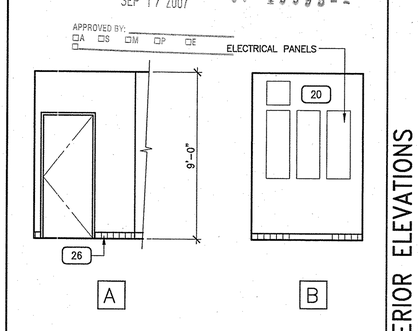

ELEVATION @ EMPLOYEE — SCALE: 1/4"=1'-0" — 4

CLARK COUNTY DEVELOPMENT SVCS. DEPT.
SEP 17 2007
07-19993--
APPROVED BY:

INTERIOR ELEVATIONS

THIS DRAWING IS AN INSTRUMENT OF SERVICE BETWEEN THE ARCHITECT AND HIS CLIENT, BUT REMAINS THE PROPERTY OF THE ARCHITECT.
© ALL RIGHTS RESERVED 2007

planning/interior design
GARY GUY WILSON ARCHITECTS, PC
(702)876-0668
professional corp / certified n.c.a.r.b.
architecture/engineering/site
7625 Dean Martin Drive, Suite#100
Las Vegas, Nevada 89139
CONSULTANTS:
CIVIL: CIVILWORKS, INC. ELEC: SH NEVADA
STRUCTL: WRIGHT ENGINEERS MECH: SH NEVADA

CARL'S JR RESTAURANT
@ RUSSELL ROAD & EASTERN AVE.
McCARRAN MARKETPLACE
FOR: S.L. INVESTMENTS, MR. STEVE LARSON
CLARK COUNTY, NEVADA

PROJ.NO.	13520701.00
PROJ.ARCH.	G.G.WILSON,AIA
PROJ.MGR	MVM
JOB CAPT	MVM
TECH'N	VAN/EMD
ARCH.CHK	GGW
PH-2/3	02FEB07
PH-4	30MAR07
PH-5	02MAY07

REVISIONS

PRINTS REQUIRE ARCHITECT'S SEAL & SIGN. FOR PROOF OF VALIDITY

GARY G. WILSON REGISTERED No. 845 ARCHITECT
APR 19 2007

SHT.NO. A-11

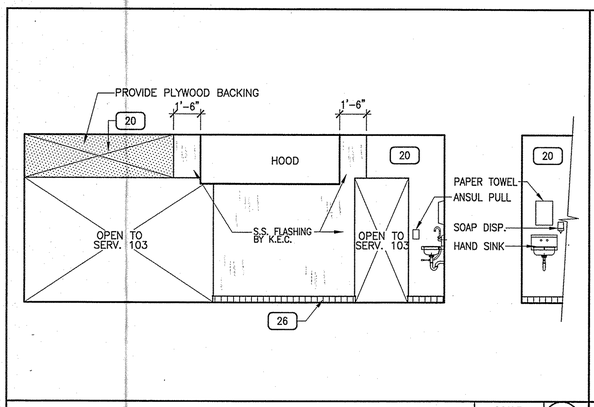

KITCHEN SCALE: 1/4"=1'-0" 21

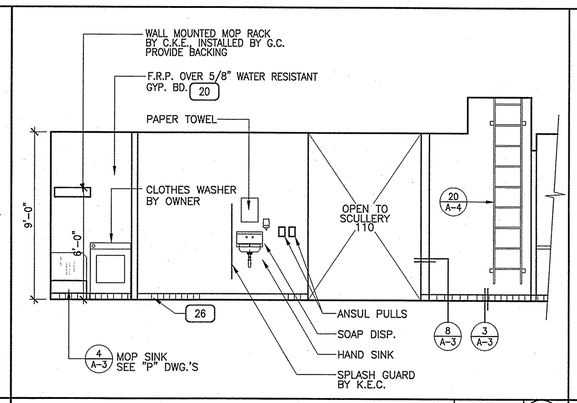

KITCHEN SCALE: 1/4"=1'-0" 13

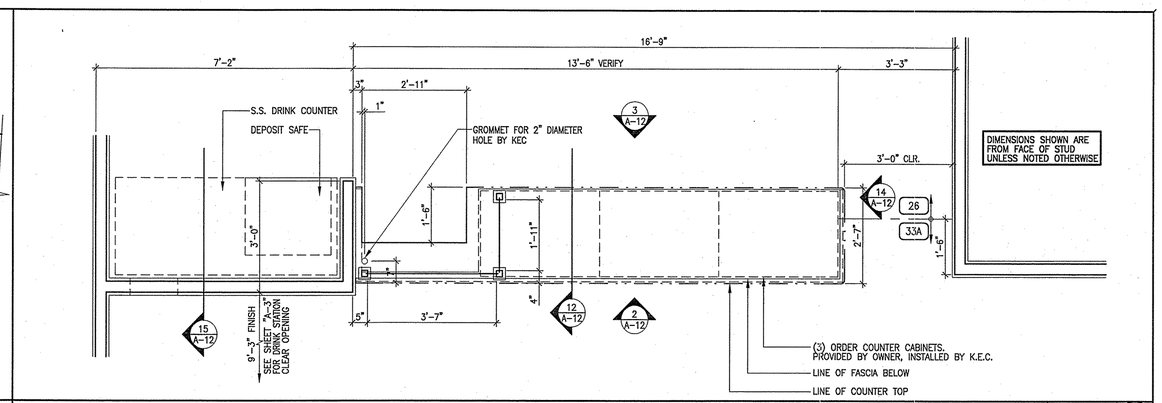

ORDER COUNTER (PLAN VIEW) SCALE: 1/2"=1'-0" 1

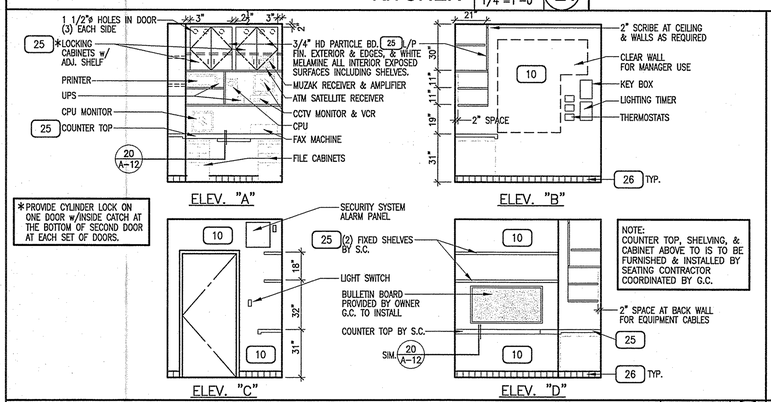

OFFICE SCALE: 1/4"=1'-0" 18

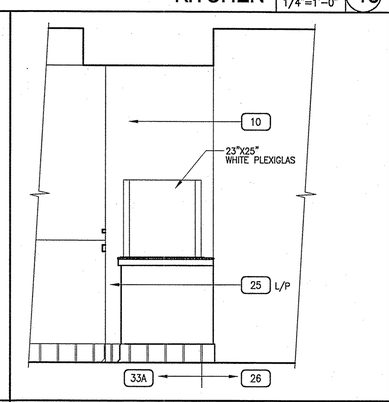

ELEVATION SCALE: 1/2"=1'-0" 14

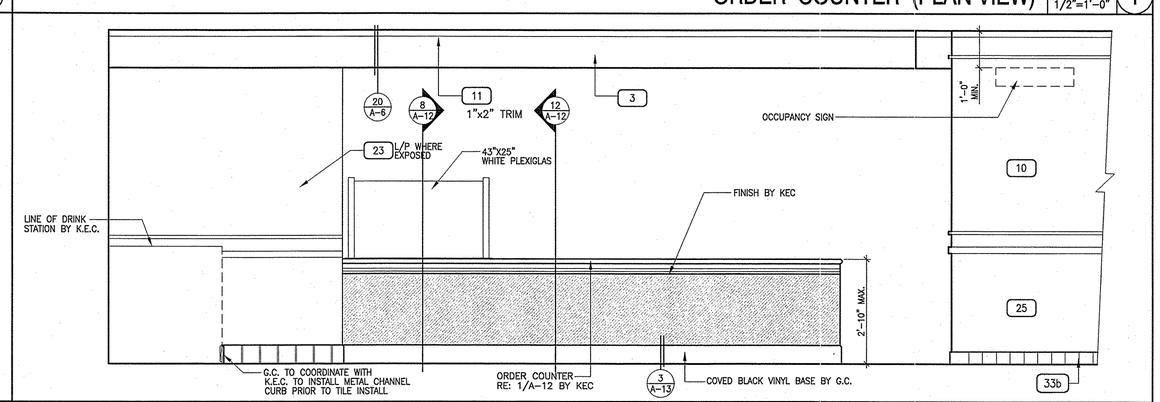

ORDER COUNTER (ELEVATION) SCALE: 1/2"=1'-0" 2

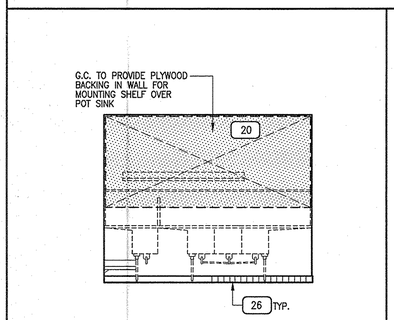

SCULLERY SCALE: 1/4"=1'-0" 23

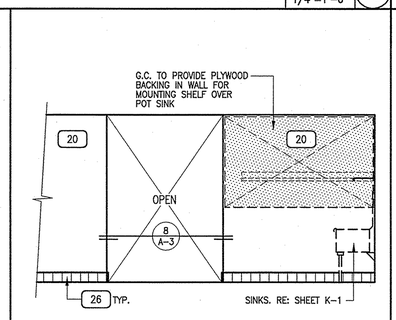

SCULLERY SCALE: 1/4"=1'-0" 19

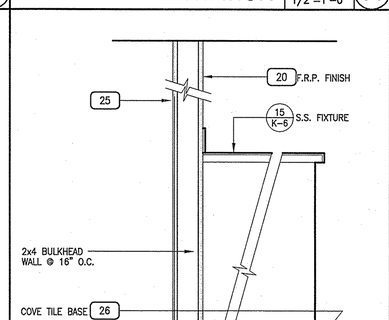

SECTION SCALE: 1"=1'-0" 15

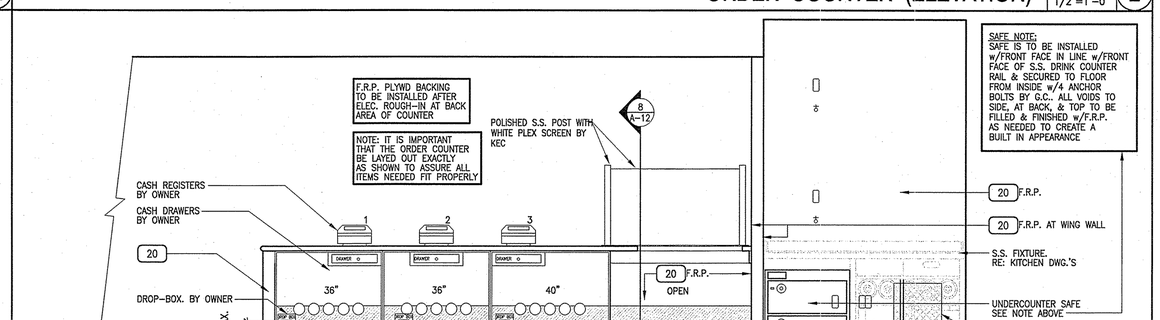

ORDER COUNTER (ELEVATION) SCALE: 1/2"=1'-0" 3

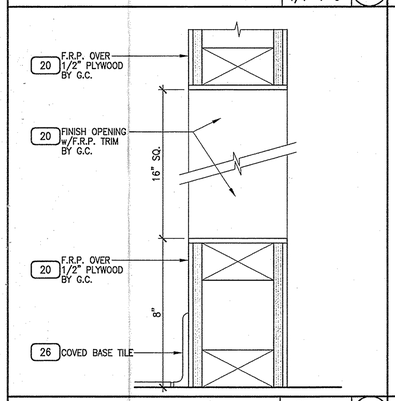

FRAMED, FINISH OPENING SCALE: N.T.S. 24

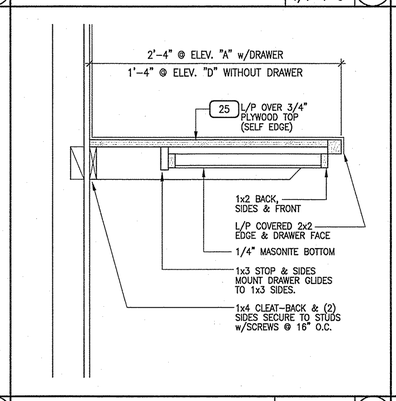

DESK/OFFICE COUNTER SCALE: 1 1/2" = 1'-0" 20

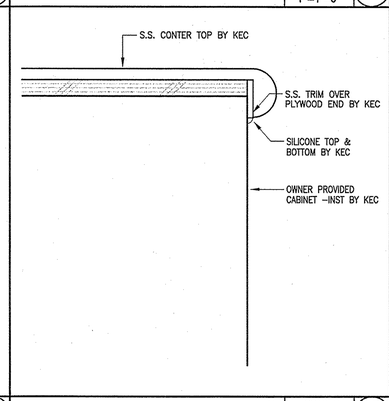

SECTION SCALE: N.T.S. 16

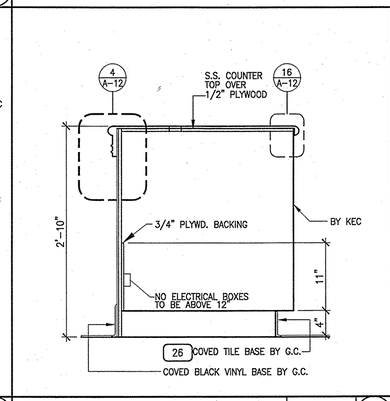

SECTION SCALE: 1"=1'-0" 12

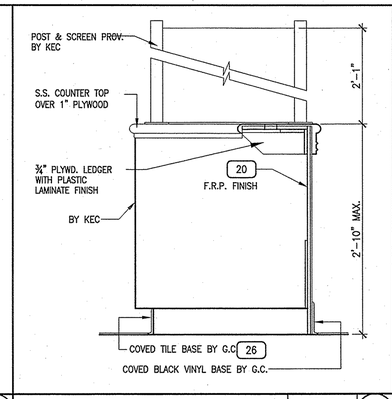

SECTION SCALE: 1"=1'-0" 8

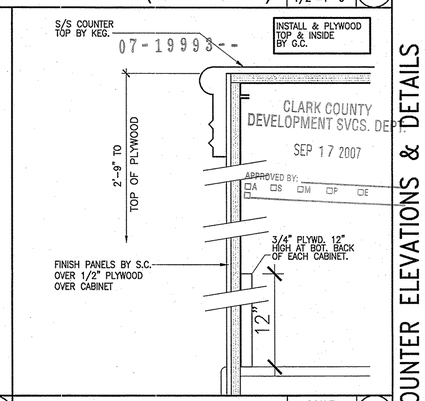

DETAIL SCALE: 3"=1'-0" 4

07-19993--
CLARK COUNTY DEVELOPMENT SVCS. DEPT
SEP 17 2007
APPROVED BY:
A S M P E

COUNTER ELEVATIONS & DETAILS

THIS DRAWING IS AN INSTRUMENT OF SERVICE BETWEEN THE ARCHITECT AND HIS CLIENT, BUT REMAINS THE PROPERTY OF THE ARCHITECT.
© ALL RIGHTS RESERVED 2007

planning/interior design
GARY GUY WILSON ARCHITECTS, PC
(702)876-0668
professional corp / certified n.c.a.r.b.
architecture/engineering/site
7625 Dean Martin Drive, Suite #100
Las Vegas, Nevada 89139
CONSULTANTS:
CIVIL: CIVILWORKS, INC. ELEC: SH NEVADA
STRUCTL: WRIGHT ENGINEERS MECH: SH NEVADA

CARL'S JR RESTAURANT
@ RUSSELL ROAD & EASTERN AVE.
McCARRAN MARKETPLACE
FOR: S.L. INVESTMENTS, MR. STEVE LARSON
CLARK COUNTY, NEVADA

PROJ.NO.	13520701.00
PROJ.ARCH.	G.G.WILSON,AIA
PROJ.MGR	MVM
JOB CAPT	MVM
TECH'N	VAN/EMD
ARCH.CHK	GGW
PH-2/3	02FEB07
PH-4	30MAR07
PH-5	02MAY07

REVISIONS
1 .....
2
3
4
5
6
7

PRINTS REQUIRE ARCHITECT'S SEAL & SIGN FOR PROOF OF VALIDITY

GARY G. WILSON REGISTERED No. 545 ARCHITECT STATE OF NEVADA
APR 18 2007

SHT.NO. A-12

NO.	SIZE APPROX. WIDTH	SIZE APPROX. HEIGHT	TYPE	GLASS	FRAME	DETAILS HEAD	DETAILS JAMB	DETAILS JAMB	DETAILS SILL	REMARKS
A	5'-1"	5'-0"	FIXED	1/4" DUAL	ALUM.	10/A-10	18/A-10	11/A-10	5/A-10	* 10/A-10 18/A-10
B	3'-4"	5'-0"	FIXED	1/4" TEMP.	ALUM.	10/A-10	18/A-10	11/A-10	5/A-10	
C	6'-8"	5'-0"	FIXED	1/4" DUAL	ALUM.	10/A-10	18/A-10	23/A-10	12/A-10	
D	6'-0"	4'-4"	FIXED	1/4" FLOAT	ALUM.	20/A-10	10sim/A-10	10sim/A-10	20/A-10	OCCURS ONLY AT PROTOTYPE 14 ENTRY VESTIBULE
E										
F										
G	4'-0"	2'-6"	FIXED	1/4" DUAL	ALUM.	10/A-10	10/A-10	10/A-10	2/A-10	
H	4'-0"	2'-6"	FIXED & SLDR	1/4" TEMP.	ALUM.	2/A-10	3/A-10	3/A-10	4/A-10	PROVIDE MANUAL SLIDING WINDOW SEE SPECS. REFER TO MECH. SHEETS FOR FLY FAN ABOVE (WDW. OPENING: 18"x24"=432 SQ.IN)
J	3'-0"	1'-2"	FIXED	1/4" DUAL	ALUM.	21/A-10	21/A-10	21/A-10	21/A-10	
K	6'-2"	1'-2"	FIXED	1/4" DUAL	ALUM.	21/A-10	21/A-10	21/A-10	21/A-10	
L	3'-0"	1'-2"	FIXED	1/4" DUAL	ALUM.	21/A-10	21/A-10	23/A-10	21/A-10	
M										
N										
O										
P										
Q										
R										
S										
T										
U										

REMARKS
* WINDOWS LABELS MUST SHOW SUITABLE RATINGS FOR LOCAL CLIMATE ZONE EXPOSURE, 25 & 80 M.P.H. WINDS. ALL LABELS MUST BE AFFIXED AT THE WINDOW MANUFACTURES' PLANT. LABELS MUST BE VERIFIED DURING ROUGH FRAMING STAGES.
* USE MOISTOP PREFAB STRIPS AROUND WINDOWS & EXTERIOR DOORS, BITUTHANE AT PLANTERS, & HORIZONTAL PROJECTING BUILDING ELEMENTS.

NOTE: SIZES ARE APPROXIMATE. G.C. TO VERIFY w/FLOOR PLAN, ELEVATIONS, & FIELD MEASUREMENTS PRIOR TO FABRICATION.

WINDOW SCHEDULE

SC: NONE (17)

NO.	SIZE WIDTH	SIZE HEIGHT	SIZE THICK.	DOOR TYPE	MATERIALS DOOR FACE	MATERIALS DOOR CORE	MATERIALS DOOR GLASS	MATERIALS DOOR FINISH	MATERIALS FRAME	DETAILS HEAD	DETAILS JAMB	DETAILS JAMB	DETAILS T-HOLD	DETAILS LOUVER	HARDWARE SET	REMARKS
1	3'-0"	8'-0"	1 3/4"	A	FULL GLASS	ALUM.	1/4" TEMP.	19	ALUM.	21/A-10	22/23/A-10	19/22/A-10	16/A-10		SEE SPEC.	* PANIC HARDWARE ON ALL PUBLIC EXIT DOORS INCLUDING TO PLAY AREA AND OUT. * NO LOCK OR LATCH ON PLAY ROOM EXIT GATE EXCEPT PANIC
2	N/A															
3	N/A															
4	4'-0"	7'-0"	1 3/4"	B	FLUSH METAL	H.M.	--	8	HM 8	7/A-10	7/A-10	7/A-10	8B/A-10		SEE SPEC.	PEEP HOLE, SELF CLOSING, HEAVY DUTY PIANO HINGE & DOOR STOP, 11 PAINT INTERIOR
5	2'-4"	7'-0"	1 3/4"	D	FLUSH METAL	H.M.	--	8	HM 8	7/A-10	7/A-10	7/A-10	8A/A-10		SEE SPEC.	
6	N/A															
7	3'-0"	6'-8"	1 3/4"	C	L/P	S.C. WOOD	--	25	HM 9	17/A-10	17/A-10	17/A-10	--		SEE SPEC.	SELF CLOSING, KICK PLATE, PUSH/PULL PLATE, UNDERCUT 1"
8	3'-0"	6'-8"	1 3/4"	C	L/P	S.C. WOOD	--	25	HM 9	17/A-10	17/A-10	17/A-10	--		SEE SPEC.	UNDERCUT 1"
9	3'-0"	6'-8"	1 3/4"	C	L/P	S.C. WOOD	--	25	HM 9	17/A-10	17/A-10	17/A-10	--		SEE SPEC.	PEEP HOLE UNDERCUT 1"
10	N/A															
11	N/A															
12	N/A															
13	N/A															
14	3'-0"	7'-0"	1 3/4"	A	FULL GLASS	ALUM.	1/4" TEMP.	19	ALUM.	21/A-10	22/23/A-10	19/22/A-10	16/A-10		SEE SPEC.	PUSH/PULL HARDWARE AND KICK PLATES ONLY.
15	N/A															

DOOR SCHEDULE

SC: NONE (19)

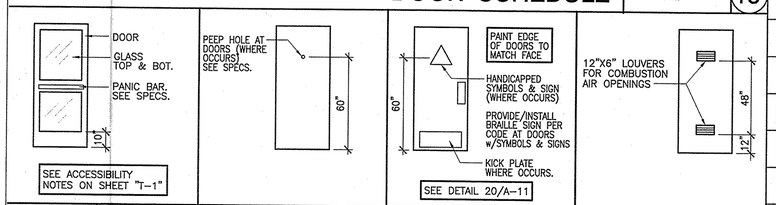

A	B	C	D
ALUMINUM DOOR w/ 1/4" CLEAR TEMP. GLASS SEE SPECS.	FLUSH HOLLOW METAL DOOR. SEE SPECS.	1 3/4" SOLID CORE WOOD DOOR w/ L/P EACH SIDE.	FLUSH HOLLOW METAL DOOR. SEE SPECS.

DOOR TYPES

SC: NONE (20)

NO.	ROOM	FLOOR FINISH: QUARRY TILE W/ ABRASIVE (TRAFFIC AREAS ONLY)	FLOOR FINISH: QUARRY TILE 26	FLOOR FINISH: TILE (DINING)	FLOOR FINISH: CONCRETE	FLOOR FINISH: CARPET (N.I.C.)	FLOOR FINISH: EPOXY – OPTIONAL	BASE: 6" QUARRY TILE COVE BASE WITH 3/8" RADIUS COVE 26	BASE: 6" TILE COVE BASE WITH 3/8" RADIUS COVE (U.N.O.)	BASE: WOOD	BASE: CARPET (N.I.C.)	BASE: VINYL	BASE: EPOXY
101	ORDER			●					●				
102	DINING ROOM			●					●				
103	SERVING		●					●					
104	VESTIBULE			●					●				
105	MENS			●					●				
106	WOMENS			●					●				
107	OFFICE		●					●					
108	EMPLOYEE		●					●					
109	CREW		●					●					
110	SCULLERY	●	●					●					
111	ELECTRIC ROOM				●							●	
112	W.H. CLOSET				●							●	
113	KITCHEN	●	●					●					
114	COOLER	●	●					●					
115	FREEZER												
116	STORAGE CLOSET			●					●				
117	ENTRY VESTIBULE			●					●				

NO.	*WALLS MATERIALS: MASONRY	5/8" GYPSUM BOARD	5/8" MOIST. RESIST. GYP. BD.	5/8" TYPE "X" GYPSUM BOARD	GLASS	FINISH: PAINT (REFER TO ELEVS.)	LAMINATED PLASTIC	F.R.P.	VINYL	PANELS	WAINSCOT	TILE	*CEILING MATERIAL: 5/8" GYPSUM BOARD	EXPOSED *	17 3/4"x24"x24" ACOUST. TILE	18 3/4"x24"x48" ACOUST. TILE	HEIGHT	FINISH: PAINT	REMARKS
101		●				SEE INTERIOR ELEVATIONS									●		SEE A-6	●	
102		●			●	SEE INTERIOR ELEVATIONS									●		+9'-0"		
103			●							●						●	+9'-0"		
104		●								●			●				+8'-6"	●	
105			●									●	●				+8'-0"	●	
106			●									●	●				+8'-0"	●	
107		●				●										●	+8'-6"		
108		●						●								●	+8'-6"		
109		●				●										●	+8'-6"		
110			●					●								●	+8'-6"		F.R.P. ON ALL GYP. BD. WALLS UNLESS OTHERWISE NOTED
111		●				●							●				+9'-6"	●	TAPE & SAND GYP.BD. FINISH 11
112			●			●							●				+7'-3"	●	TAPE & SAND GYP.BD. FINISH 11
113		●	●					●								●	+8'-6"		F.R.P. ON ALL GYP. BD. WALLS UNLESS OTHERWISE NOTED
114	←			BY MANUFACTURER															→ TILE FLOOR AFTER INSTALL OF COOLER.
115	←			BY MANUFACTURER															→
116			●			●											+8'-6"	●	PAINT WALLS & SHELVES 11
117		●			●				●		●		●				+8'-9"	●	PROVIDE CHAIRRAIL PER DETAIL 13/A-10 APPLICABLE TO FLOOR PLANS W/ VESTIBULES ONLY.

ROOM FINISH SCHEDULE

SC: NONE (2)

NO.	MATERIAL	MFG./COLOR	LUSTER/TYPE
1	PAINT (INTERIOR STAIN)	SHERWIN WILLIAMS MOORISH TEAK	(NOT USED)
2	PAINT (EXTERIOR)	SHERWIN WILLIAMS SW 7044 AMAZING GRAY	UPPER EXTERIOR WALLS
3	PAINT (INTERIOR)	SHERWIN WILLIAMS SW 6321 RED BAY	
4	FABRIC AWNING (EXTERIOR)	JOHN BOYLE & CO. INC. SIGNMASTER SUPREME #627 SCARLET SUPREME	3 COLOR SPEC PER DESIGNER DIRECTIVE
5	PAINT (EXTERIOR)	SHERWIN WILLIAMS SW 6372 INVITING IVORY	WALLS AND TRIM
6	PAINT (EXTERIOR)	SHERWIN WILLIAMS SW 6102 PORTABELLO	WALLS
7	PAINT (EXTERIOR)	SHERWIN WILLIAMS SW 6871 POSITIVE RED OR TO MATCH COLOR OF FABRIC AWNING (COLOR #4)	ROOF CAP TRIMS
8	PAINT (EXTERIOR)	MATCH ADJACENT SURFACE	SEMI-GLOSS ENAMEL – SEE SPECIFICATIONS
9	PAINT (INTERIOR)	SHERWIN WILLIAMS P-1SW7038 TONY TAUPE EGGSHELL FINISH	VESTIBULE ENTRY
10	PAINT (INTERIOR)	SHERWIN WILLIAMS, SW 6388 GOLDEN FLEECE	DINNING ROOM WALLS
11	PAINT (INTERIOR)	SHERWIN WILLIAMS, SW 6102 PORTABELLO	DINNING ROOM TRIM AROUND WINDOWS
12	TILE (R.R. FLOOR)	DAL TILE VS02 VITREOUS SELECT CERAMIC WHITE GRANITE 8 X 8	
13	TILE (R.R. ACCENT)	DAL TILE 0190 : S4612F / ARCTIC WHITE 1/2"X6" FLAT SBN ON 1/2 SIDE	GROUT- CUSTOM BUILDING PROD #9 NATURAL GRAY
14	CARPET	ATLAST- CYANBROOK CA06 CRIMSON FIRE -PENLAND PD10 INDIGO LAKE	
15	METAL LAMINATE	CHEMETAL NO. 902 BRUSHED ALUMINUM	(STAR AND TRIM)
16	PLASTIC LAMINATE	FORMICA # 839-58 STOP RED MATT FINISH	
17	CEILING TILE	ARMSTRONG FINE FISSURED ADOBE	FRAME GRID SILVER SATIN 24" X 48"
18	CEILING TILE (KITCHEN)	ARMSTRONG VL RH90 FIREGUARD #870 NON-PERFORATED ICBO #5173 SEE SPECS. FOR ALTERNATE	24"x48" SUSPENDED CLEANABLE T-BAR GRID SYSTEM- SEE SPECS.
19	ALUMINUM FINISH	CLEAR ANODIZED ALUMINUM	
20	FRP PANELING	MARLITE P-151 LIGHT GREY	SEE SPECS. (KITCHEN)
20A	TILE (R.R.)	DECORATIVE WALL BAND CEPAC GLOSS BLACK 1 X 3	PLACE 12" BELOW CEILING
20B	DECORATIVE GLASS	1/4" CLEAR TEMPERED RIBBED GLASS	(POLISHED EDGES) WAVE EFFECT

NO.	MATERIAL	MFG./COLOR	LUSTER/TYPE
21	5/8" GYPSUM WALLBOARD	SEE SPECIFICATION RE: TO INT. ELEVATIONS FOR PAINT	LIGHT FOG SPRAY
22	BRICK VENEER-INTERIOR	Z-BRICK – AMERICAN COLLECTION CLASSIC RED	LOGO ART TO BE APPLIED TO BRICK
22A	CMU-VENEER	EXPOSED CMU VENEER; HONED FACE WALNUT CREEK BY TRENDSTONE TO MATCH EXISTING CENTER	
23	PLASTIC LAMINATE	FORMICA – 3505-58 STORM SOLIOZ	
24	PLASTIC LAMINATE	FORMICA-FLINT CRYSTAL 3518-58	MATTE FINISH
25	PLASTIC LAMINATE	ARBORITE W 411-VL COPPER WOOD -BOIS CUIVRE	
26	TILE (KITCHEN)	DAL TILE # Q44 TEMPEST GRAY (6X6) OR ARID GREY 0Q42	GROUT CBD #9 "NATURAL GRAY"
27	PLASTIC LAMINATE	FORMICA STELLAR # 689-58 (MATTE FINISH)	
28	PAINT (INTERIOR)	SHERWIN WILLIAMS WEATHERED TEAK	
29	METAL LAMINATE	CHEMETAL "CIRCLES" #406	
30	WALL TILE (R.R. WALL)	DAL TILE 6x8 GLOSS WHITE PL02 POLARIS – RUNNING BOND PATTERN	GROUT- CUSTOM BDG PRODUCTS / USE MATCH BULLNOSE CAP 381 BRIGHT WHITE / 2X6 54269
31	DINING ROOM CHAIRS BY OWNER	MADISON GRAND SIARA #363499	"WHEAT"
32	PLASTIC LAMINATE	FORMICA 909-58M "BLACK"	
33A	DINING ROOM TILE (FIELD)	ASH MP05 & CHARCOAL MP06 50/50 @45° DEG	GROUT- CUSTOM BUILDING PRODUCTS #60 CHARCOAL
33B	DINING ROOM TILE (BASE)	DC 14, CORE BASE P-3689	
34	UPHOLSTERY BAR STOOL BY OWNER	EXPRESSIONS – BLACK EX277 ROQUE POPPY RU980	
35	UPHOLSTERY BOOTHS	SEE K-7	
36	UPHOLSTERY	SEE K-7	
37	UPHOLSTERY	SEE K-7	
38	UPHOLSTERY	SEE K-7	
39	WINDOW ROLLER SHADES (WHERE OCCURS)	FASCIA/ BOTTOM RAIL TO BE BLACK	MATERIAL TO BE PHIFER SHEARWEAVE BLACK
40	PLAYGROUND VINYL WALL COVERING	MDC WALL COVERING MESA 1269 (TRAX 351)	(800) 621-4006
41	SOLID SURFACE MATERIAL	CORIAN – COCOA BROWN (F)	
42	SOLID SURFACE MATERIAL	CORIAN DELTA SAND	

INTERIOR AND EXTERIOR FINISH SCHEDULE

SC: NONE (4)

REMARKS

* SERVING, RESTROOMS, SCULLERY, CREW ROOM AND KITCHEN WALLS AND CEILINGS TO HAVE SMOOTH AND WASHABLE FINISH.
* USE MOISTURE RESISTANT GYPSUM BOARD AT ALL WET AREAS AND BEHIND ALL TILE WALLS
* TILE MUST BE APPLIED OVER CEMENT PLASTER BACKING AT SURFACES SUBJECT TO WATER SPLASH. (SHOWERS, TUBS, AND COMMERCIAL RESTROOMS, ETC.)
* CEILING MAY BE EXPOSED IF DIRECTED ON CEILING PLAN PAINT TO BLACK OUT AREA ABOVE IF APPLICABLE

CLARK COUNTY DEVELOPMENT SVCS. DEPT.
SEP 17 2007
APPROVED BY: ☐A ☐S ☐M ☐P ☐E

07-19993--

THIS DRAWING IS AN INSTRUMENT OF SERVICE BETWEEN THE ARCHITECT AND HIS CLIENT, BUT REMAINS THE PROPERTY OF THE ARCHITECT.
© ALL RIGHTS RESERVED 2007

planning/interior design
AIA ARCHITECTS,PC
(702)876-0668
professional corp / certified n.c.a.r.b.
architecture/engineering/site
GARY GUY WILSON
7625 Dean Martin Drive, Suite#100
Las Vegas, Nevada 89139

CONSULTANTS:
CIVIL: CIVILWORKS, INC.
STRUCTL: WRIGHT ENGINEERS
ELEC: SH NEVADA
MECH: SH NEVADA

CARL'S JR RESTAURANT
@ RUSSELL ROAD & EASTERN AVE.
McCARRAN MARKETPLACE
FOR: S.L. INVESTMENTS, MR. STEVE LARSON
CLARK COUNTY, NEVADA

WINDOW, DOOR, FINISH & MATERIAL SCHEDULES & DOOR TYPES

PROJ.NO.	13520701.00
PROJ.ARCH.	G.G.WILSON,AIA
PROJ.MGR	MVM
JOB CAPT	MVM
TECH'N	VAN/EMD
ARCH.CHK	GGW
PH-2/3	02FEB07
PH-4	30MAR07
PH-5	02MAY07

REVISIONS

PRINTS REQUIRE ARCHITECT'S SEAL & SIGN. FOR PROOF OF VALIDITY
GARY G. WILSON REGISTERED No 547 ARCHITECT STATE OF NEVADA
APR 3 0 2007

SHT.NO. A-13

GENERAL STRUCTURAL NOTES

A. GENERAL REQUIREMENTS

1. THESE DRAWINGS HAVE BEEN PREPARED USING STANDARDS OF PROFESSIONAL CARE AND COMPLETENESS NORMALLY EXERCISED UNDER SIMILAR CIRCUMSTANCES BY REPUTABLE STRUCTURAL ENGINEERS IN THIS OR SIMILAR LOCALITIES. THEY ASSUME THAT THE WORK DEPICTED WILL BE PERFORMED BY AN EXPERIENCED CONTRACTOR AND/OR WORKMEN WHO HAVE A WORKING KNOWLEDGE OF THE APPLICABLE CODE STANDARDS AND REQUIREMENTS AND OF INDUSTRY ACCEPTED STANDARD GOOD PRACTICE. AS NOT EVERY CONDITION OR ELEMENT IS (OR CAN BE) EXPLICITLY SHOWN ON THESE DRAWINGS, THE CONTRACTOR SHALL USE INDUSTRY ACCEPTED STANDARD GOOD PRACTICE FOR MISCELLANEOUS WORK NOT EXPLICITLY SHOWN.
2. THESE DRAWINGS REPRESENT THE FINISHED STRUCTURE. THEY DO NOT INDICATE THE METHOD OF CONSTRUCTION. THE CONTRACTOR SHALL BE SOLELY RESPONSIBLE FOR CONSTRUCTION MEANS, METHODS, TECHNIQUES, SEQUENCES, PROCEDURES, LAGGING, SHORING, BRACING, FORM-WORK, ETC. AS REQUIRED FOR THE PROTECTION OF LIFE AND PROPERTY DURING CONSTRUCTION. CONSTRUCTION MATERIALS SHALL BE UNIFORMLY SPREAD OUT SUCH THAT DESIGN LIVE LOAD PER SQUARE FOOT AS NOTED HEREIN IS NOT EXCEEDED.
3. DESIGN OF NON-PRIMARY STRUCTURAL ITEMS, SUCH AS STAIRS, RAILINGS, NON-STRUCTURAL WALLS AND PREFABRICATED STRUCTURAL ITEMS, SUCH AS FLOOR AND ROOF TRUSSES, IS TO BE PROVIDED BY OTHERS AND SUBMITTED FOR APPROVAL AS A DEFERRED SUBMITTAL UNLESS SPECIFICALLY NOTED ON THESE DRAWINGS.
4. THE CONTRACTOR SHALL VERIFY ALL DIMENSIONS, CONDITIONS AND ELEVATIONS WITH ARCH'L. DRAWINGS AND RESOLVE ANY DISCREPANCIES WITH THE ARCHITECT PRIOR TO START OF CONSTRUCTION. CONTRACTOR SHALL ESTABLISH AND VERIFY ALL OPENINGS AND INSERTS FOR ARCH'L, MECH, PLUMBING AND ELECTRICAL WITH APPROPRIATE TRADES, DRAWINGS AND SUBCONTRACTORS PRIOR TO CONSTRUCTION.
5. TYPICAL DETAILS AND NOTES SHALL APPLY, THOUGH NOT NECESSARILY INDICATED AT A SPECIFIC LOCATION ON PLANS. WHERE NO DETAILS ARE SHOWN, CONSTRUCTION SHALL CONFORM TO SIMILAR WORK ON THE PROJECT. DETAILS MAY SHOW ONLY ONE SIDE OF CONNECTION OR MAY OMIT INFORMATION FOR CLARITY.
6. NOTES AND DETAILS ON DRAWINGS SHALL TAKE PRECEDENCE OVER GENERAL STRUCTURAL NOTES AND TYPICAL DETAILS.
7. ALL INSPECTIONS REQUIRED BY THE BUILDING CODES, LOCAL BUILDING DEPARTMENTS, OR BY THESE PLANS SHALL BE PROVIDED BY AN INDEPENDENT INSPECTION COMPANY OR THE BUILDING DEPARTMENT. SITE VISITS BY THE ENGINEER DO NOT CONSTITUTE AN INSPECTION.

B. BASIS FOR DESIGN

1. BUILDING CODE: INTERNATIONAL BUILDING CODE 2000
2. ROOF LOADS: DEAD LOAD: 15 PSF (ADD 12 PSF AT STUCCO CEILING); LIVE LOAD (REDUCIBLE): 20 PSF
3. WIND LOADS: 90 MPH BASIC WIND SPEED; EXPOSURE B; INTERNAL PRESSURE COEFFICIENT (GCpi) = 0.18; IMPORTANCE FACTOR = 1.0; COMPONENT AND CLADDING WIND PRESSURE PER ASCE7-98, METHOD 2
4. SEISMIC LOADS: SITE CLASS D; SEISMIC DESIGN CATEGORY D; R = 6.0; SS = 0.623; S1 = 0.185; SDS = 0.541; SD1 = 0.254; IMPORTANCE FACTOR = 1.0; SEISMIC USE GROUP = I; SYSTEM: LIGHT FRAME WALLS w/ SHEAR PANELS; ANALYSIS: EQUIVALENT LATERAL FORCE PROCEDURE; BASE SHEAR: 0.090 W
5. SNOW LOADS: NONE

C. FOUNDATION

1. FOUNDATIONS DESIGNED PER RECOMMENDATIONS BY MACTEC ENGINEERING AND CONSULTING, INC., REPORT NO. 4400-03-2001, DATED OCTOBER 28, 2003 AND ADDENDUM DATED OCTOBER 26, 2006. SITE PREPARATION, GRADING, TESTS, INSPECTIONS, FIELD OBSERVATIONS, OR APPROVAL FROM THE GEOTECHNICAL ENGINEER RECOMMENDED BY THE GEOTECHNICAL REPORT AND ANY ADDENDA SHALL BE COMPLETED PRIOR TO CONSTRUCTION OF FOUNDATIONS.
2. ALLOWABLE DEAD PLUS LIVE LOAD SOIL PRESSURE = 2000 PSF.
3. CANTILEVER RETAINING WALLS DESIGNED USING ACTIVE SOIL PRESSURE (EQUIVALENT FLUID WEIGHT) OF 35 PSF/FT. BRACED FOUNDATION WALLS DESIGNED WITH SOIL PRESSURE DISTRIBUTION PER GEOTECHNICAL REPORT.
4. BACKFILL AGAINST FOUNDATION WALLS OR EXTERIOR WALLS BELOW GRADE SHALL NOT BE PLACED UNTIL AFTER THE TOP OF THE WALLS ARE RESTRAINED BY THE COMPLETED INTERIOR FLOOR SYSTEMS AND ALL ELEMENTS HAVE REACHED THEIR DESIGN STRENGTH. BACKFILL SHALL BE GRANULAR AND FREE DRAINING. COMPACT BACKFILL PER GEOTECHNICAL REPORT.
5. TRENCHES AND EXCAVATIONS UNDER OR ADJACENT TO FOUNDATIONS SHALL BE PROPERLY BACKFILLED AND COMPACTED.

D. CONCRETE

1. ALL CONCRETE CONSTRUCTION SHALL BE PERFORMED IN ACCORDANCE WITH ACI 318 AND ACI 301 (LATEST EDITIONS), EXCEPT AS MODIFIED BY THE CONSTRUCTION DOCUMENTS.
2. DUE TO SEVERE/VERY SEVERE SULFATE CONTENT OF THE ON-SITE SOILS, MIN. 28 DAY COMPRESSIVE STRENGTH, f'c, SHALL BE 4500 PSI FOR ALL CONCRETE IN CONTACT WITH SOIL. MAX. WATER/CEMENT RATIO FOR CONCRETE IN CONTACT WITH SOIL SHALL BE 0.45. (FOUNDATION DESIGN BASED ON 2500 PSI.)
3. FOR ALL STRUCTURAL CONCRETE NOT IN CONTACT w/ SOIL, f'c SHALL BE 3000 PSI U.N.O. (EXCEPTION: NORMAL WEIGHT CONCRETE OVER STEEL DECK SHALL BE 3500 PSI).
4. CONCRETE MIXES SHALL BE DESIGNED BY A CERTIFIED LABORATORY, STAMPED BY AN APPROPRIATELY LICENSED SPECIALTY ENGINEER, AND APPROVED BY THE ENGINEER OF RECORD. MIX DESIGNS SHALL INCLUDE THE PROJECT NAME AND INDICATE THEIR USE WITHIN THE STRUCTURE. MIX DESIGNS SHALL BE PROPORTIONED TO MINIMIZE SHRINKAGE AND HAVE PROVEN SHRINKAGE CHARACTERISTICS OF 0.05% OR LESS BASED ON TESTING PER ASTM C157.
5. ALL CONCRETE SHALL BE NORMAL WEIGHT OF 145 POUNDS PER CUBIC FOOT USING HARD ROCK AGGREGATES CONFORMING TO ASTM C33 U.N.O. WHERE LIGHTWEIGHT CONCRETE IS SPECIFIED, CONCRETE SHALL BE 110 POUNDS PER CUBIC FOOT USING AGGREGATES CONFORMING TO ASTM C330. MAXIMUM NOMINAL AGGREGATE SIZE FOR ALL CONCRETE SHALL BE 3/4" OR GREATER U.N.O.
6. MAX. SLUMP SHALL BE 5 INCHES (EXCEPTION: WHERE ADMIXTURES/PLASTICIZERS HAVE BEEN INCLUDED IN MIX DESIGN TO IMPROVE WORKABILITY, SLUMP LIMIT SHALL BE BASED ON ADMIXTURE MFR'S RECOMMENDATIONS). MIX WATER SHALL BE CLEAN AND POTABLE.
7. PORTLAND CEMENT SHALL CONFORM TO ASTM C150. TYPE V CEMENT SHALL BE USED FOR CONCRETE IN CONTACT WITH EARTH. TYPE II CEMENT MAY BE USED ELSEWHERE. CEMENT SHALL BE TYPE V WITH POZZOLAN WHERE CONCRETE IS IN CONTACT WITH SOIL CONTAINING VERY SEVERE SULFATE EXPOSURE.
8. FLY ASH MAY BE USED IN CONCRETE, SUBJECT TO APPROVAL BY THE ARCHITECT, PROVIDED THE FOLLOWING CONDITIONS ARE MET:

8.1. FLY ASH SHALL COMPLY WITH ASTM C618.

8.2. CEMENT CONTENT SHALL BE REDUCED A MINIMUM OF 15 PERCENT UP TO A MAXIMUM OF 25 PERCENT WHEN COMPARED TO AN EQUIVALENT CONCRETE MIX DESIGN WITHOUT FLY ASH. FLY ASH CONTENT SHALL NOT COMPRISE MORE THAN 35 PERCENT OF THE TOTAL CEMENTITIOUS CONTENT. THE WATER-CEMENT RATIO SHALL BE CALCULATED BASED ON THE TOTAL CEMENTITIOUS MATERIAL IN THE MIX.

D. CONCRETE (CONT'D.)

8.3. CLASS F FLY ASH SHALL BE USED IN SULFATE RESISTANT CONCRETE WITH f'c EQUAL TO OR GREATER THAN 4000 PSI. CLASS C FLY ASH MAY BE USED ELSEWHERE.

8.4. SHOULD THE CONTRACTOR ELECT TO USE EARLY STRENGTH CONCRETE TO ACHIEVE THE SPECIFIED COMPRESSIVE STRENGTH, f'c, AT LESS THAN 28 DAYS, THE CONCRETE MIX DESIGN SHALL BE PROPORTIONED TO DEVELOP THE 28 DAY COMPRESSIVE STRENGTH AT THE REQUIRED AGE. THE CONTRACTOR SHALL SUBMIT TEST DATA FOR REVIEW BY THE STRUCTURAL ENGINEER TO SUBSTANTIATE THE CONCRETE STRENGTH AT THE REQUIRED AGE.

9. WATER SOLUBLE CHLORIDE ION CONCENTRATIONS IN CONCRETE SHALL BE LIMITED PER ACI 318, SECTION 4.4.
10. AIR ENTRAINMENT SHALL BE 6% (+/- 1.5%) FOR ALL CONCRETE EXPOSED TO FREEZE/THAW CYCLES.
11. NO MORE THAN 90 MINUTES SHALL ELAPSE BETWEEN CONCRETE BATCHING AND CONCRETE PLACEMENT, UNLESS APPROVED BY THE ENGINEER.
12. CONCRETE MIXING, PLACEMENT AND QUALITY SHALL BE PER IBC SECTION 1905. MECHANICALLY VIBRATE ALL CONCRETE WHEN PLACED. SLABS ON GRADE NEED BE VIBRATED ONLY AROUND AND UNDER FLOOR DUCTS OR SIMILAR ELEMENTS. REMOVE ALL DEBRIS FROM FORMS BEFORE PLACING CONCRETE. CONCRETE SHALL NOT BE DROPPED THROUGH REINFORCING STEEL SO AS TO CAUSE SEGREGATION OF AGGREGATES. UNCONFINED FALL OF CONCRETE SHALL NOT EXCEED 5 FEET.
13. PROTECT CONCRETE FROM DAMAGE OR REDUCED STRENGTH DUE TO COLD OR HOT WEATHER IN ACCORDANCE WITH ACI 305 AND 306. CONTRACTOR SHALL TAKE SPECIAL CURING PRECAUTIONS TO MINIMIZE SHRINKAGE CRACKING OF CONCRETE SLABS.
14. ALL ITEMS TO BE CAST IN CONCRETE SUCH AS REINFORCEMENT, DOWELS, BOLTS, ANCHORS, SLEEVES, ETC., SHALL BE SECURELY POSITIONED IN THE FORMS.
15. PIPES AND ELECTRICAL CONDUITS SHALL NOT BE EMBEDDED IN STRUCTURAL CONCRETE EXCEPT AS NOTED IN TYPICAL DETAILS OR WHERE SPECIFICALLY APPROVED BY THE ENGINEER. EMBEDDED ITEMS SHALL NOT IMPAIR THE STRENGTH OF THE MEMBER.
16. CONCRETE SLAB ON GRADE CONTROL JOINTS SHALL BE AS NOTED ON THE FOUNDATION PLAN. DOWELED CONTROL JOINTS NEED ONLY OCCUR AT EXPOSED EDGES DURING POURING. ALL OTHER JOINTS MAY BE SAW CUT. POST-TENSIONED CONCRETE SLABS ON GRADE SHALL NOT HAVE CONTROL JOINTS UNLESS SPECIFICALLY NOTED.
17. CONSTRUCTION JOINT SURFACES SHALL BE CLEANED AND LAITANCE REMOVED. HORIZONTAL JOINT SURFACES SHALL BE ROUGHENED TO 1/4" AMPLITUDE. THOROUGHLY WET ALL JOINT SURFACES AND REMOVE STANDING WATER IMMEDIATELY PRIOR TO NEW CONCRETE PLACEMENT.
18. CONCRETE SHALL BE CURED IN ACCORDANCE WITH ACI 318, SECTIONS 5.11.1 OR 5.11.2, WHICHEVER IS APPLICABLE. UNLESS ALTERNATE METHODS HAVE BEEN APPROVED BY THE ARCHITECT AND ENGINEER. WHERE CURING COMPOUNDS HAVE BEEN APPROVED FOR SLAB CURING, CONTRACTOR SHALL BE RESPONSIBLE FOR VERIFYING COMPATIBILITY OF COMPOUNDS WITH ANTICIPATED FLOOR FINISH (e.g., RESILIENT TILE) PRIOR TO CURING COMPOUND APPLICATION.
19. GROUT BENEATH COLUMN BASES OR BEARING PLATES SHALL BE 5000 PSI (MIN.) NON-SHRINK FLOWABLE GROUT OR DRYPACK. INSTALL GROUT BENEATH BEARING PLATES BEFORE FRAMING MEMBER IS INSTALLED. AT COLUMNS, INSTALL GROUT BENEATH BASE PLATES AFTER COLUMN HAS BEEN PLUMBED. FRAMING (NOT INCLUDING CONCRETE OVER STEEL DECK OR CONCRETE TOPPING AS OCCURS) MAY BE INSTALLED ONE LEVEL ABOVE BASE PLATE PRIOR TO PLACING GROUT BENEATH BASE PLATES. GROUT SHALL BE PLACED BENEATH BASE PLATES PRIOR TO INSTALLATION OF ANY FRAMING TWO OR MORE LEVELS ABOVE BASE PLATE. GROUT DEPTH SHALL BE 1 1/2" TYPICAL, OR SHALL BE SUFFICIENT TO ALLOW GROUT OR DRYPACK TO BE PLACED BENEATH PLATE WITHOUT VOIDS.

E. REINFORCING STEEL

1. REINFORCING STEEL SHALL BE DETAILED AND PLACED IN ACCORDANCE WITH ACI 318 AND CRSI'S MANUAL OF STANDARD PRACTICE (LATEST EDITIONS).
2. REINFORCING STEEL SHALL CONFORM TO ASTM A615 OR ASTM A706 (A706 REQUIRED FOR ALL REINFORCING TO BE WELDED) AND SHALL BE GRADE 60 (f_y = 60 KSI) DEFORMED BARS U.N.O. REINFORCING IN SLABS ON GRADE MAY BE GRADE 40 (f_y = 40 KSI) DEFORMED BARS FOR ALL BARS #4 AND SMALLER U.N.O. ON PLANS OR DETAILS.
3. WELDED WIRE FABRIC SHALL CONFORM TO THE REQUIREMENTS OF ASTM A185. LAPS IN WELDED WIRE FABRIC SHALL BE MADE SUCH THAT THE OVERLAP, MEASURED BETWEEN OUTERMOST CROSS WIRE OF EACH FABRIC SHEET, IS NOT LESS THAN THE SPACING OF CROSS WIRES PLUS 2 INCHES.
4. FIBER REINFORCING MAY BE USED WHERE SPECIFICALLY NOTED ON PLANS AND SHALL BE 3/4" LENGTH (MIN.), TYPE III MONOFILAMENT POLYPROPYLENE FIBERS DESIGNED FOR USE IN CONCRETE, COMPLYING WITH ASTM C 1116. FIBERS SHALL BE MIXED WITH CONCRETE AND PLACED PER MFR. RECOMMENDATIONS AT THE RATE OF 1 1/2 LB/CU YD. U.N.O.
5. ALL DIMENSIONS SHOWING THE LOCATION OF REINFORCING STEEL NOT NOTED AS "CLEAR" OR "CLR." ARE TO CENTER OF STEEL. CLEAR COVER FOR NON-PRESTRESSED CONCRETE REINFORCING SHALL BE AS NOTED BELOW, U.N.O. ON PLANS OR DETAILS. CLEAR COVER FOR PRESTRESSED CONCRETE AND FOR PRECAST CONCRETE MANUFACTURED UNDER PLANT CONTROL CONDITIONS SHALL BE PER ACI 318, SECTIONS 7.7.2 AND 7.7.3, RESPECTIVELY.

EXPOSURE CONDITION:	COVER:
CAST AGAINST AND PERMANENTLY EXPOSED TO EARTH	3"
EXPOSED TO EARTH OR WEATHER (INCLUDES SLABS ON GRADE)	
NO. 5 AND SMALLER	1 1/2"
NO. 6 AND LARGER	2"
NOT EXPOSED TO WEATHER OR IN CONTACT WITH GROUND	
STRUCTURAL SLABS, WALLS, JOISTS	
NO. 11 AND SMALLER	3/4"
NO. 14 AND LARGER	1 1/2"
BEAMS, COLUMNS (PRIMARY REINFORCEMENT, TIES, STIRRUPS, SPIRALS)	1 1/2"

6. LAP SPLICES OF REINFORCING STEEL SHALL CONFORM TO ACI 318, SECTION 12, OR LAP SCHEDULE WHERE PRESENT, U.N.O. NO TACK WELDING OF REINFORCING BARS ALLOWED. LATEST ACI CODE AND DETAILING MANUAL APPLY. AT WALLS AND FOOTINGS, PROVIDE BENT CORNER BARS TO MATCH AND LAP WITH HORIZ. BARS AT ALL CORNERS AND INTERSECTIONS U.N.O. VERT. WALL BARS SHALL BE SPLICED AT OR NEAR FLOOR LINES. SPLICE TOP BARS AT CENTER LINE OF SPAN AND BOTTOM BARS AT THE SUPPORT IN SPANDRELS, BEAMS, GRADE BEAMS, ETC., U.N.O. ON PLANS OR DETAILS.
7. ALL REINFORCING SHALL BE BENT COLD. BARS SHALL NOT BE UN-BENT AND RE-BENT. FIELD BENDING OF REBAR SHALL NOT BE ALLOWED UNLESS SPECIFICALLY NOTED.
8. WELDING OF REINFORCING BARS, METAL INSERTS, AND CONNECTIONS SHALL BE MADE ONLY AT LOCATIONS SHOWN ON PLANS OR DETAILS. SEE WELDING SECTION OF G.S.N. FOR ADDITIONAL REQUIREMENTS.
9. REINFORCING BAR SPACINGS SHOWN ON PLANS ARE MAX. ON CENTER DIMENSIONS. DOWEL ALL VERT. REINFORCING TO FOUNDATION. SECURELY TIE ALL BARS IN LOCATION BEFORE PLACING CONCRETE. MIN. CLEAR SPACING BETWEEN PARALLEL REINFORCEMENT SHALL BE THE LARGER OF 1-1/2 TIMES NOMINAL BAR DIA. OR 1-1/3 TIMES MAX. AGGREGATE SIZE OR 1-1/2". CLEAR SPACING LIMITATION APPLIES ALSO TO CLEAR DISTANCE BETWEEN A CONTACT LAP SPLICE AND ADJACENT SPLICES OR BARS.

F. STRUCTURAL STEEL

1. STRUCTURAL STEEL MEMBERS SHALL CONFORM TO THE LATEST EDITION OF THE FOLLOWING STANDARDS AND MATERIAL PROPERTIES U.N.O:

SHAPE:	STANDARD:	F_y:
BARS AND PLATES	ASTM A36	36 KSI
	OR	
	ASTM A572, GRADE 50 (WHERE NOTED)	50 KSI
HOLLOW STRUCT. SECTIONS (RECT.)	ASTM A500, GRADE B	46 KSI

2. ALL STRUCTURAL AND MISC. STEEL SHALL BE FABRICATED AND ERECTED IN ACCORDANCE WITH AISC 303 (LATEST EDITION).
3. SEE CONCRETE SECTION OF G.S.N. FOR GROUTING REQUIREMENTS BENEATH COLUMN BASES AND BEARING PLATES.

G. STRUCTURAL STEEL WELDING

1. ALL WELDING OF STRUCTURAL STEEL SHALL CONFORM TO AWS D1.1 (LATEST EDITION) AND FOLLOW THE PREQUALIFIED JOINT DETAILS INCLUDED THEREIN. WELDING OF JOINTS THAT INCLUDE REINFORCING STEEL SHALL CONFORM TO AWS D1.4.
2. WELDING SHALL BE PERFORMED BY WELDERS HOLDING VALID CERTIFICATES AND HAVING CURRENT EXPERIENCE IN THE TYPE OF WELD SHOWN ON THE DRAWINGS. CONTRACTOR MAY SHOP WELD OR FIELD WELD AT HIS DISCRETION. ALL COMPLETE JOINT PENETRATION (CJP) WELDS SHALL BE TESTED AND CERTIFIED BY AN INDEPENDENT TESTING LABORATORY.
3. ALL WELDING SHALL USE E70 SERIES ELECTRODES U.N.O. WELDS BETWEEN REINFORCING BARS SHALL USE E90 SERIES ELECTRODES (E70 SERIES ELECTRODE REQUIREMENT STILL APPLIES TO WELDS BETWEEN REINFORCING BARS AND STRUCTURAL STEEL).
4. WELDING SHALL BE PERFORMED IN ACCORDANCE WITH A WELDING PROCEDURE SPECIFICATION (WPS) AS REQUIRED IN AWS D1.1. THE WPS VARIABLES SHALL BE WITHIN THE PARAMETERS ESTABLISHED BY THE FILLER METAL MANUFACTURER. THE WPS SHALL BE SUBMITTED TO THE OWNER'S TESTING AGENCY FOR REVIEW PRIOR TO FABRICATION AND ERECTION. COPIES OF THE WPS SHALL BE ON SITE AND AVAILABLE TO ALL WELDERS AND THE SPECIAL INSPECTOR.
5. WELD LENGTHS CALLED OUT ON PLANS OR DETAILS ARE MINIMUM NET EFFECTIVE LENGTHS U.N.O.
6. ALL MISC. FILLET WELDS NOT NOTED, INCLUDING THOSE FOR STIFFENERS, MISC. PLATES, ETC., SHALL BE PER AISC 360 (LATEST EDITION), TABLE J2.4.
7. WELDS SHALL BE SEQUENCED TO MINIMIZE RESIDUAL STRESS DUE TO WELD SHRINKAGE.

H. STRUCTURAL STEEL BOLTS, ANCHORS, HEADED STUDS

1. STRUCTURAL STEEL BOLTS, ANCHORS, ETC., SHALL CONFORM TO THE LATEST EDITION OF THE FOLLOWING STANDARDS AND MATERIAL PROPERTIES U.N.O:

COMPONENT:	STANDARD:	F_y:
BOLTS	ASTM A325	---
	OR ASTM A490 WHERE NOTED	---
NUTS	ASTM A563	---
WASHERS	ASTM F436	---
ANCHOR RODS	ASTM F554, GRADE 36	36 KSI
	OR GRADE 55 WHERE NOTED (GRADE 55 RODS SHALL COMPLY WITH WELDABILITY SUPPLEMENT S1)	55 KSI

2. ALL BOLTS SHALL BE INSTALLED AS BEARING-TYPE CONNECTIONS WITH THREADS EXCLUDED FROM SHEAR PLANE (TYPE "X" CONNECTION) U.N.O. HIGH-STRENGTH BOLT ASSEMBLIES SHALL BE IN ACCORDANCE WITH THE RCSC "SPECIFICATION FOR STRUCTURAL JOINTS USING ASTM A325 OR A490 BOLTS" AND SHALL BE SNUG TIGHTENED USING ANY AISC APPROVED METHOD U.N.O. ALL BOLTS IN SLOTTED OR OVERSIZED HOLES AND ALL HIGH-STRENGTH BOLTS SHALL BE INSTALLED WITH HARDENED WASHERS.
3. ALL ANCHOR RODS AT STEEL COLUMN BASE PLATES SHALL BE RODS WITH THREADS BOTH ENDS WITH HEAVY HEX NUT FULLY THREADED ONTO EMBEDDED END. TACK WELD NUT TO ROD OR SPOIL THREADS TO PREVENT NUT FROM BACKING OFF. ANCHOR RODS SHALL NOT BE REPAIRED, REPLACED OR FIELD-MODIFIED WITHOUT WRITTEN APPROVAL FROM THE ENGINEER.
4. ALL CONNECTIONS INVOLVING WOOD MEMBERS, INCLUDING THOSE WITH THREADED ROD, THREADED STUDS, FOUNDATION ANCHOR BOLTS, THRU-BOLTS, ETC., SHALL USE ASTM A307 MATERIAL U.N.O. ALL BOLTS, ANCHOR BOLTS, EXPANSION BOLTS, ETC., SHALL BE INSTALLED WITH STEEL WASHERS AT FACE OF WOOD.
5. HEADED STUDS AND AUTOMATIC WELDED DOWELS SHOWN ON PLANS OR DETAILS SHALL BE BY NELSON STUD WELDING, INC., PER ICC ER-2614 AND ICC ER-5211, RESPECTIVELY. STUDS SHALL HAVE FLUXED ENDS AND BE AUTOMATICALLY END-WELDED WITH SUITABLE EQUIPMENT (NO FILLET WELDING OF STUDS PERMITTED U.N.O.) AT SPACINGS INDICATED ON THE PLANS OR DETAILS. WELDING OF STUDS SHALL CONFORM TO THE REQUIREMENTS OF AWS D1.1 AND AWS C5.4 (LATEST EDITIONS). HEADED STUDS AND AUTOMATIC WELDED DOWELS BY OTHER MANUFACTURERS MAY BE SUBSTITUTED PROVIDED THEY ARE OF EQUIVALENT CAPACITY FOR THE INTENDED APPLICATION AND HAVE CURRENT ICC APPROVAL.
6. ALL EXPANSION ANCHORS SHALL BE HILTI KWIK-BOLT 3 PER ICC ESR-1385 OR SIMPSON WEDGE-ALL PER ICC ESR-1396 U.N.O. EXPANSION ANCHORS SHALL BE INSTALLED WITH SPECIAL INSPECTION. SUBSTITUTIONS SHALL ONLY BE PERMITTED WITH PRIOR WRITTEN APPROVAL OF THE ENGINEER THROUGH THE ARCHITECT.
7. ALL THREADED SCREW ANCHORS SHALL BE POWER'S WEDGE-BOLT PER ICC ESR-1678, SIMPSON TITEN HD PER ICC ESR-1056, HILTI HUS-H PER ICC ESR-1423, OR RAMSET LDT PER ICC ER-5890. THREADED SCREW ANCHORS SHALL BE INSTALLED WITH SPECIAL INSPECTION. SUBSTITUTIONS SHALL ONLY BE PERMITTED WITH PRIOR WRITTEN APPROVAL OF THE ENGINEER THROUGH THE ARCHITECT.
8. ALL EPOXY ANCHORS SHALL USE SIMPSON SET EPOXY PER ICC ESR-1772 OR HILTI HY-150 INJECTION ADHESIVE PER ICC ER-5193 U.N.O. INSTALL PER MFR'S. SPEC'S. SPECIAL INSPECTION PER IBC SECTION 1704.15 REQUIRED FOR ALL EPOXY ANCHOR INSTALLATIONS. FOR EPOXY PRODUCTS, BASE MATERIAL TEMPERATURE SHALL BE NO LESS THAN 40 °F AT THE TIME OF APPLICATION.

I. WOOD

1. SAWN FRAMING LUMBER SHALL COMPLY WITH THE LATEST EDITION OF THE GRADING RULES OF THE WESTERN WOOD PRODUCTS ASSOCIATION OR THE WEST COAST LUMBER INSPECTION BUREAU. ALL SAWN LUMBER SHALL BE STAMPED WITH THE GRADE MARK OF AN APPROVED LUMBER GRADING AGENCY. SAWN LUMBER SHALL HAVE THE FOLLOWING MIN. GRADE, U.N.O.:

USE:	MATERIAL:
2x4 TOP PLATES	DOUGLAS FIR STANDARD GRADE
2x4 BLOCKING	DOUGLAS FIR STUD GRADE
2x4 STUDS	DOUGLAS FIR NO. 2
2x6 TOP PLATES	DOUGLAS FIR NO. 2
2x6 STUDS (UP TO 10'-0"), BLOCKING	DOUGLAS FIR STUD GRADE
2x6 STUDS (OVER 10'-0")	DOUGLAS FIR NO. 2
2x6 PARAPET STUDS	DOUGLAS FIR NO. 2
2x BOTTOM PLATES	DOUGLAS FIR STANDARD GRADE
6x BEAMS AND 6x POSTS	DOUGLAS FIR NO. 1
JOISTS AND ALL OTHER SAWN LUMBER	DOUGLAS FIR NO. 2

2. LUMBER RESTING ON CONCRETE OR MASONRY SHALL BE TREATED w/ SODIUM BORATE (SBX/DOT) TO AWPA STANDARD U2-1 OR U2-2, e.g. PAC BOR. PER ICC NER-648. FASTENERS IN THIS TREATED LUMBER MAY BE CARBON STEEL. FIELD TREATMENT OF END CUTS AND BORINGS IS ONLY REQ'D. ON MEMBERS OVER 2" THICK. WHERE REQ'D., FIELD TREATMENT SHALL USE A "WOOD PRESERVATIVE" THAT IS EITHER A 2% SOLUTION OF COPPER NAPHTHENATE OR A 10% SOLUTION OF SODIUM BORATE (SBX/DOT).

I. WOOD (CONT'D.)

3. GLUE-LAMINATED (GLULAM) BEAMS SHALL BE DOUGLAS FIR COMBINATION 24F-V4 U.N.O. ON PLAN. FABRICATION AND HANDLING SHALL CONFORM WITH THE LATEST AITC AND ASTM STANDARDS. BEAMS SHALL BEAR AN APPROPRIATE GRADE STAMP CLEARLY NOTING ITS DESIGN PROPERTIES. BEAMS SHALL BE MPRD WITH 3500 FT. RADIUS OF CURVATURE UNLESS ALTERNATE CAMBER IS SPECIFICALLY NOTED ON THE DRAWINGS.
4. LAMINATED STRAND LUMBER (LSL) SHALL BE TRUS JOIST TIMBERSTRAND LSL (ICC ESR-1387) GRADE 1.7E OR HIGHER. EXCEPTION: GRADE 1.5E OR HIGHER MAY BE USED FOR BEAMS OR HEADERS WITH DEPTHS LESS THAN OR EQUAL TO 8 5/8".
5. LAMINATED VENEER LUMBER (LVL) SHALL BE TRUS JOIST MICROLLAM LVL (ICC ESR-1387) GRADE 1.9E OR HIGHER, LOUISIANA PACIFIC GANG-LAM LV (ICC ESR-1254) GRADE 1.9E OR HIGHER, OR BOISE CASCADE VERSA-LAM (ICC ESR-1040) GRADE 2800 DF OR HIGHER. CONNECTION OF MULTIPLE PLY BEAMS SHALL BE PER MANUFACTURER'S SPECIFICATIONS.
6. PARALLEL STRAND LUMBER (PSL) SHALL BE TRUS JOIST PARALLAM PSL (ICC ESR-1387) GRADE DF 2.0E OR HIGHER.
7. GLULAM BEAMS MAY BE SUBSTITUTED FOR LSL OR SOLID SAWN BEAMS (NOT VICE-VERSA) PER THE FOLLOWING TABLES. WHERE THE OPTION OF EITHER AN LSL OR A SOLID SAWN BEAM IS GIVEN ON THE PLANS, THE SMALLER OF THE ALLOWABLE SUBSTITUTES, PER THE TABLES BELOW, IS ADEQUATE. GLULAM BEAMS SHALL BE 24F-V4.

SPECIFIED LSL:	GLULAM BEAM ALTERNATES			
3 1/2x4 3/8	3 1/8x9	5 1/8x9	3 1/2x7 1/2	5 1/2x9
3 1/2x4 3/8 LAID FLAT	3 1/8x7 1/2	5 1/8x9	3 1/2x7 1/2	5 1/2x9
3 1/2x5 1/2	3 1/8x10 1/2	5 1/8x9	3 1/2x10 1/2	5 1/2x9
3 1/2x7 1/4	3 1/8x15	5 1/8x9	3 1/2x13 1/2	5 1/2x9
3 1/2x8 5/8	3 1/8x16 1/2	5 1/8x10 1/2	3 1/2x15	5 1/2x10 1/2
3 1/2x9 1/4	3 1/8x18	5 1/8x12	3 1/2x16 1/2	5 1/2x10 1/2
3 1/2x9 1/2	3 1/8x18	5 1/8x12	3 1/2x16 1/2	5 1/2x10 1/2
3 1/2x11 1/4	3 1/8x22 1/2	5 1/8x13 1/2	3 1/2x19 1/2	5 1/2x12
3 1/2x11 7/8	3 1/8x22 1/2	5 1/8x15	3 1/2x21	5 1/2x13 1/2
3 1/2x14	---	5 1/8x16 1/2	---	5 1/2x15
3 1/2x16	---	5 1/8x19 1/2	---	5 1/2x18
3 1/2x18	---	5 1/8x21	---	5 1/2x19 1/2

SPECIFIED SOLID SAWN:	GLULAM BEAM ALTERNATES			
4x6	3 1/8x6	5 1/8x6	3 1/2x6	5 1/2x6
4x8	3 1/8x7 1/2	5 1/8x9	3 1/2x7 1/2	5 1/2x9
4x10	3 1/8x10 1/2	5 1/8x9	3 1/2x9	5 1/2x9
4x12	3 1/8x12	5 1/8x10 1/2	3 1/2x12	5 1/2x10 1/2
6x6	3 1/8x7 1/2	5 1/8x9	3 1/2x7 1/2	5 1/2x9
6x8	3 1/8x10 1/2	5 1/8x9	3 1/2x9	5 1/2x9
6x10	---	5 1/8x10 1/2	---	5 1/2x9
6x12	---	5 1/8x12	---	5 1/2x12

8. DO NOT NOTCH OR DRILL JOISTS OR BEAMS U.N.O. ON PLAN OR G.S.N. WITHOUT PRIOR APPROVAL OF THE STRUCTURAL ENGINEER THROUGH THE ARCHITECT. DOUBLE UP FLOOR JOISTS AND BLOCKING UNDER WALLS THAT RUN PARALLEL TO THE JOISTS. PROVIDE 2" (NOMINAL) SOLID BLOCKING BETWEEN JOISTS AT SUPPORTS.
9. ALL BOLTS SHALL BE INSTALLED IN HOLES BORED WITH A BIT 1/16 INCH LARGER THAN THE DIA. OF THE BOLT. BOLTS AND NUTS SEATING ON WOOD SHALL HAVE CUT STEEL WASHERS UNDER HEADS AND NUTS. DING THREADS TO PREVENT LOOSENING. LAG BOLTS SHALL BE INSTALLED IN PRE-DRILLED HOLES BY TURNING WITH A WRENCH.
10. MAX. DEFLECTION LIMITS FOR PREFABRICATED PLATED WOOD TRUSSES, OPEN WEB JOISTS w/ TUBULAR STEEL WEBS, AND PLYWOOD WEB I-JOISTS/PURLINS SHALL BE AS FOLLOWS:

	LIVE LOAD:	TOTAL LOAD:
ROOF	SPAN/360

GENERAL STRUCTURAL NOTES

I. WOOD (CONT'D.)

17. FOR PLYWOOD OR A.P.A. RATED SHEATHING: FULL WIDTH PANELS SHALL BE USED WHEREVER POSSIBLE. AT ROOF SHEATHING, PANELS 16" TO 24" WIDE SHALL HAVE EDGES SUPPORTED BY 2x BLOCKING OR (2) PSCL CLIPS BETWEEN EACH SUPPORTING MEMBER AND PANELS 12" TO 16" WIDE SHALL HAVE EDGES SUPPORTED BY 2x BLOCKING. PROVIDE EDGE NAILING AT ALL BLOCKED PANEL EDGES.

18. SHEAR PANEL BLOCKING NOTED ON PLANS OR DETAILS SHALL BE CONSTRUCTED OF 2x SOLID FRAMING, WITH TOP MEMBER ORIENTED VERTICALLY, w/ 3/8" MIN. PLYWOOD w/ 8d AT 6" o.c. U.N.O. AND SHALL BE NAILED TO ADJACENT TRUSSES w/ MIN. (2) 16d TOP AND BOTTOM.

19. WHERE BRIDGING INTERFERES WITH MECH. OR OTHER INSTALLATIONS, REMOVE BRIDGING AFTER DECK IS IN PLACE AND REPLACE WITH ADDITIONAL MFR. SUPPLIED HORIZ. STRUT BRACING AT TOP AND BOTTOM CHORDS.

20. BEAMS OR TWO PLY (OR LARGER) GIRDER TRUSSES BEARING ON TOP PLATES SHALL BE ATTACHED TO TOP PLATES WITH A34 ONE SIDE AND (2) 16d TOENAILS OTHER SIDE, U.N.O. ON PLAN.

21. SIMPSON STRONG-WALLS ARE SPECIFIED BY MODEL NUMBER ON THE PLANS (e.g. SW24x8). ALL STRONG-WALLS SHALL BE MANUFACTURED AND INSTALLED IN ACCORDANCE w/ ICC PFC-5485 USING OSB SHEATHING U.N.O.

J. EXTERIOR ANCHOR BOLT SUBSTITUTIONS

1. ALL EXTERIOR WALLS SHALL BE ANCHORED WITH EMBEDDED ANCHOR BOLTS PER PLANS AND/OR DETAILS. ANCHOR BOLT SUBSTITUTIONS ARE PERMITTED AS LISTED IN THIS SECTION. THESE SUBSTITUTIONS DO NOT APPLY TO HOLDOWN ANCHOR BOLTS.

2. ALL BOLT-TYPE SUBSTITUTIONS IN SHEAR WALLS SHALL BE INSTALLED w/ 3/16"x2"x2" PLATE WASHERS.

3. (1) 1/2" DIA. EPOXY BOLT OR EXPANSION ANCHOR MAY BE USED AT EXTERIOR AND INTERIOR WALL (NON-SHEAR WALLS) BOTTOM PLATE SPLICE WHERE A WET-SET ANCHOR BOLT DOES NOT OCCUR WITHIN (12) INCHES OF EACH SIDE OF SPLICE. INSTALL ANCHORAGE MIN. (7) BOLT DIAMETERS FROM END OF BOTTOM PLATE. THE SPACING OF THE WET-SET ANCHOR BOLTS SHALL REMAIN AS NOTED ON THE PLAN OR SHEAR WALL SCHEDULE. POWDER ACTUATED FASTENERS (SHOT-PINS) MAY NOT BE USED IN LIEU OF ANCHOR BOLTS AT EXTERIOR WALLS.

4. EPOXY BOLTS OF THE SAME DIAMETER AND SPACING MAY BE USED TO REPAIR MISLOCATED, MISSED, OR DAMAGED ANCHOR BOLTS AT EXTERIOR WALLS. PROVIDE MIN. 7" EMBEDMENT FOR EPOXY BOLTS.

5. USE SIMPSON SET 22, ITW RAMset/RED HEAD EPCON CERAMIC 6, HILTI HIT RE500 POWERS POWER-FAST STANDARD SET, OR APPROVED EQUAL EPOXY ADHESIVE. INSTALL PER MFR'S SPECIFICATIONS. SPECIAL INSPECTION PER IBC SECTION 1704 IS REQUIRED FOR ALL EPOXY ANCHOR INSTALLATIONS. FOR EPOXY PRODUCTS THE BASE MATERIAL TEMPERATURE SHALL BE NO LESS THAN 40° F AT THE TIME OF APPLICATION.

6. EXPANSION ANCHORS MAY BE USED TO REPAIR MISLOCATED, MISSED OR DAMAGED ANCHOR BOLTS 1/2" DIA. OR LESS AT EXTERIOR WALLS INCLUDING SHEAR WALLS. PROVIDE (2) 1/2" DIA. EXPANSION ANCHORS FOR EACH 1/2" DIA. ANCHOR BOLT. EXPANSION ANCHORS SHALL BE SPACED NOT CLOSER THAN 6 1/2" o.c. AND SHALL BE INSTALLED WITH A MIN. 4 1/8" EMBEDMENT AND SHALL BE 1 3/4" MIN. FROM SLAB EDGE.

7. EXPANSION ANCHORS INSTALLED WITH LESS THAN 2" EDGE DISTANCE FROM SLAB EDGE SHALL BE TRUBOLT WEDGE ANCHORS AS MANUFACTURED BY ITW RAMset/REDHEAD PER ICC ER-1372, HILTI KWIK BOLT 3 PER ICC ESR-1385 OR SIMPSON WEDGE-ALL PER ICC ESR-1396. SUBSTITUTIONS TO EXPANSION ANCHORS SHALL ONLY BE PERMITTED WITH THE EXPRESS WRITTEN APPROVAL OF THE STRUCTURAL ENGINEER.

8. SIMPSON MAS, (2) MIN. PER BOTTOM PLATE PIECE, MAY BE USED IN LIEU OF BOTTOM PLATE ANCHOR BOLTS AT NON-SHEAR WALL EXTERIOR WALL BOTTOM PLATES 18" OR LESS IN LENGTH (i.e. FRONT DOOR, GARAGE PORTAL, BOX COLUMN, ETC.). AT BOTTOM PLATE LENGTHS OVER 18", NO MORE THAN (2) CONSECUTIVE ANCHORS MAY BE REPLACED w/ MAS STRAPS.

9. 1/2" AND 5/8" DIA. THREADED CONCRETE ANCHORS, AT SAME SPACING MAY BE USED IN LIEU OF EQUIVALENT DIAMETER SPECIFIED WET-SET ANCHOR BOLTS AT ALL EXTERIOR WALLS, INCLUDING SHEAR WALLS. THREADED CONCRETE ANCHORS SHALL BE SPACED NOT CLOSER THAN 8" o.c. AND SHALL BE INSTALLED 1 3/4" MIN. FROM SLAB EDGE WITH MIN. 3 1/2" EMBEDMENT. THREADED CONCRETE ANCHORS SHALL BE POWER'S WEDGE-BOLT (ICC ESR-1678), SIMPSON TITEN HD (ICC ESR-1056), HILTI HUS-H (ICC ESR-1423), OR RAMSET LDT (1/2" DIA. ONLY PER ICC ER-5890). AT 3x OR LARGER BOTTOM PLATES SCREW ANCHORS AND PLATE WASHERS MAY BE COUNTER SUNK UP TO 1/2" INTO BOTTOM PLATE TO ACHIEVE REQ'D. EMBEDMENT.

K. INTERIOR ANCHOR BOLT SUBSTITUTIONS

1. INTERIOR ANCHOR BOLTS ARE DEFINED AS ANCHOR BOLTS THAT ARE LOCATED A MIN. OF 6 INCHES FROM SLAB EDGES, STEPS, TURN DOWNS, OPENINGS, OR SIMILAR DISCONTINUITIES, AND DO NOT INCLUDE ANCHORS FOR HOLDOWNS.

2. ALL BOLT-TYPE SUBSTITUTIONS IN SHEAR WALLS SHALL BE INSTALLED w/ 3/16"x2"x2" PLATE WASHERS.

3. INTERIOR WET-SET ANCHOR BOLTS AT ALL INTERIOR WALLS MAY BE SUBSTITUTED WITH EXPANSION BOLTS OF EQUAL OR GREATER DIA. AS MFR'D. BY HILTI KWIK BOLT 3 (ICC ESR-1385), RAMSET TRUBOLT (ICC ER-1372) OR SIMPSON WEDGE-ALL (ICC ESR-1396) USING THE FOLLOWING MIN. EMBEDMENTS:

DIAMETER:	MIN. EMBEDMENT:
1/2"	2 1/4"
5/8"	2 3/4"
3/4"	3 1/4"

4. INSTALL EXPANSION BOLTS ACCORDING TO ICBO REPORT AND MFR'S RECOMMENDATIONS. CONTRACTOR MAY USE OTHER MFR'S EXPANSION BOLTS, PROVIDED CURRENT ICC REPORTS ARE PUBLISHED AND THE ALTERNATE BOLTS HAVE EQUAL OR GREATER SHEAR AND PULLOUT RESISTANCE TO THOSE LISTED ABOVE AT THE SAME EMBEDMENT.

5. 1/2" AND 5/8" DIA. THREADED CONCRETE ANCHORS, AT SAME SPACING MAY BE USED IN LIEU OF EQUIVALENT DIAMETER SPECIFIED WET-SET ANCHOR BOLTS AT ALL INTERIOR WALLS, INCLUDING SHEAR WALLS. THREADED CONCRETE ANCHORS SHALL BE SPACED NOT CLOSER THAN 3" o.c. AND SHALL BE INSTALLED WITH MIN. 3 1/2" EMBEDMENT. THREADED CONCRETE ANCHORS SHALL BE POWER'S WEDGE-BOLT ANCHOR (ICC ESR-1678), TITEN HD (ICC ESR-1056), HILTI HUS-H (ICC ESR-1423), OR RAMSET LDT (1/2" DIA. ONLY PER ICC ER-5890).

K. INTERIOR ANCHOR BOLT SUBSTITUTIONS (CONT'D.)

6. INTERIOR ANCHOR BOLTS MAY BE SUBSTITUTED WITH SHOT PINS USING EITHER RAMSET 3300 SERIES (ICC ESR-1799) OR HILTI (ICC ESR-1663) OR ANY OTHER ICC APPROVED POWDER DRIVEN FASTENER WITH AT LEAST 200 POUNDS ALLOWABLE SHEAR RESISTANCE IN 2000 PSI CONCRETE PER THE SCHEDULE BELOW. INSTALL ALL FASTENERS PER ICC REPORT AND MFR.'S RECOMMENDATIONS. EMBED 1 1/4" MIN. INSTALL SHOT PINS SUCH THAT BOTTOM PLATE WOOD DOES NOT SPLIT. IF SPLITTING OCCURS, AN ALTERNATE ANCHORAGE PER G.S.N. SHALL BE USED.

SPECIFIED ANCHOR BOLT:	ALTERNATE SHOT PIN SPACING: .110 INCH SHANK:	.140 INCH SHANK:
1/2" DIA. AT 72" o.c.	13"	10"
1/2" DIA. AT 60" o.c.	11"	8"
1/2" DIA. AT 48" o.c.	9"	6"
1/2" DIA. AT 40" o.c.	7"	---
1/2" DIA. AT 36" o.c.	6"	---
5/8" DIA. AT 72" o.c.	8 1/2"	6"
5/8" DIA. AT 60" o.c.	7"	---
5/8" DIA. AT 48" o.c.	5 1/2"	---
3/4" DIA. AT 72" o.c.	6"	---

INTERIOR NON-LOAD BEARING PARTITION WALLS MAY BE ANCHORED TO THE SLAB WITH MIN. .140 INCH DIAMETER SHOT PINS AT 32" o.c. MAX.

L. HOLDOWN ANCHORAGE

1. VERIFY LOCATION OF HOLDOWNS WITH ROUGH FRAMING TO ENSURE PROPER AND ACCURATE INSTALLATION.

2. EMBEDDED ANCHOR BOLTS FOR HOLDOWNS SHALL CONFORM TO THE TABLE CONTAINED HEREIN. BOLT DIA. SHALL BE AS SPECIFIED BY HOLDOWN MFR. BOLTS SHALL HAVE HEAVY HEX HEAD PER SCHEDULE BELOW AT EMBEDDED END. ALL-THREAD, EXCEPT AT EPOXY INSTALLATIONS, SHALL HAVE DOUBLE HEAVY HEX NUTS AT EMBEDDED END. DOUBLE HEAVY HEX NUTS SHALL FULLY ENGAGE THE ALL-THREAD AND SHALL BE CINCHED TOGETHER TO PREVENT BACK-OFF. BOLT EMBED"BN" SHALL BE MEASURED FROM THE FINISHED FLOOR TO TOP OF HEAVY HEX HEAD OR DOUBLE HEAVY HEX NUT. AT STEM WALL LOCATIONS, BOLT EMBEDMENT SHALL BE MEASURED FROM THE ADJACENT FINISHED FLOOR (NOT TOP OF STEM WALL), U.N.O. ON PLAN. EXCEPTION: SSTB BOLTS WHERE STEM WALL WIDTH AND REINFORCING MEET SIMPSON STRONG-TIE REQUIREMENTS.

3. HOLDOWN ANCHORS AT ENDS OF SHEAR WALLS MAY BE ANCHORED TO SLAB WITH EPOXY-GROUTED ALL-THREAD BAR IN DRILLED HOLE AS NOTED BELOW. USE SIMPSON SET HIGH STRENGTH EPOXY (ICC ESR-1772), POWERS POWER-FAST STANDARD SET EPOXY (ICC ESR-1531), OR HILTI HIT RE500 EPOXY (ICC ESR-1682). ALTERNATE EPOXY SYSTEMS MAY BE USED PROVIDED ICC REPORTS ARE PUBLISHED AND THE ALTERNATE SYSTEM HAS BEEN APPROVED BY THE ENGINEER OF RECORD. INSTALL PER ICC REPORT AND MANUFACTURERS SPECIFICATIONS. SPECIAL INSPECTION IS REQUIRED DURING ALL EPOXY ANCHOR BOLT INSTALLATIONS. SEPARATE PERMIT AND APPROVAL MAY BE REQUIRED BY THE BUILDING DEPARTMENT FOR EPOXY INSTALLATIONS.

4. BOLTS AND BOLT EMBEDMENTS FOR HOLDOWN ANCHORAGE SHALL BE AS FOLLOWS:

	EMBEDDED BOLT:		EPOXY-GROUTED ALTERNATE (1 3/4" MIN. EDGE DISTANCE):		ALTERNATE SSTB (SSTBL AT 3x AND 4x PLATE) BOLT:	
SIMPSON HOLDOWN:	MIN. BOLT DIA.:	MIN. EMBED:	ALL-THREAD DIA.:	MIN. EMBED:	MONO POUR:	TWO POUR:
LTT19	3/4"	7"	3/4"	4 1/2"	- - -	- - -
LTT20B	1/2"	7"	1/2"	4 1/2"	SSTB16	SSTB20
LTT31	5/8"	7"	5/8"	5"	SSTB16	SSTB20
HTT16	5/8"	8 3/4"	5/8"	10"	SSTB16	SSTB20
HTT22	5/8"	12 1/4"	5/8"	10"	SSTB24	- - -
HD2A	5/8"	7"	5/8"	5"	SSTB16	SSTB20
HD5A	5/8"	8 1/2"	5/8"	6 1/4"	SSTB16	SSTB20
HD6A	7/8"	13 1/4"	7/8"	15"	SSTB28	SSTB34
HD8A*	7/8"	19 1/2"	7/8"	15"	SSTB28	SSTB34
HD10A*	7/8"	24"	7/8"	15"	SSTB28	SSTB34
HD14A*	1"	24"	- - -	- - -	- - -	- - -
HDB*	1 1/4"	24"	- - -	- - -	- - -	- - -
PHD2	5/8"	7 1/2"	5/8"	10"	SSTB16	SSTB20
PHD5	5/8"	10 3/4"	5/8"	10"	SSTB20	SSTB24
PHD6	7/8"	14 1/4"	7/8"	15"	SSTB28	SSTB34
PHD8	7/8"	17"	7/8"	15"	SSTB28	SSTB34
HDQ8*	7/8"	24"	7/8"	15"	SSTB28	SSTB34
HDC10*	7/8"	24"	- - -	- - -	SSTB28	SSTB34

* INCREASE FOOTING SIZE AS SHOWN FOR THE FOLLOWING:

HD8A	a = 6"	HDQ8	a = 5"
HD10A	a = 8"	HDC10	a = 6 1/2"
HD14A	a = 19"	HDB	a = 26"

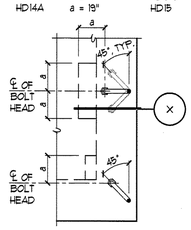

PLAN VIEW

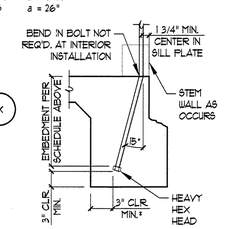

X SECTION

L. HOLDOWN ANCHORAGE (CONT'D.)

5. HOLDOWN SUBSTITUTIONS MAY BE MADE AS FOLLOWS:

SPECIFIED:	ALT.:	SPECIFIED:	ALT.:
PAHD42	HTT16, PHD2	PA18, PA23, & PA28	HTT16
HPAHD22	HTT22, PHD5	HPA28	HTT22
LSTHD8	HTT16, HD2A, PHD2	HPA35	PHD6, HD6A
STHD8	HTT16, PHD2, HD5A	PHD2	HTT22
STHD10	HTT22, PHD5, HD5A	PHD5	HTT22
STHD14	PHD6, HD8A		

6. MIN. DIMENSIONS OF HEAVY HEX HEAD/NUT SHALL BE AS FOLLOWS:

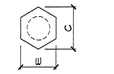

BOLT DIA:	W:	C:	N:
1/2"	7/8"	1"	1/2"
5/8"	1 1/16"	1 1/4"	5/8"
3/4"	1 1/4"	1 7/16"	3/4"
7/8"	1 7/16"	1 11/16"	7/8"
1"	1 5/8"	1 7/8"	1"
1 1/4"	2"	2 5/16"	1 1/4"

7. STHD-TYPE STRAPS MAY BE ATTACHED TO (1) KING STUD AND (1) TRIMMER STUD (AS OCCURS) PROVIDED TRIMMER STUD IS STITCH NAILED TO KING STUD w/ (20) 16d AND KING STUDS ARE STITCH NAILED TOGETHER w/ (20) 16d.

8. 2" MAX. CONCRETE SPALLING ALLOWED AT STRAP HOLDOWNS.

9. HOLDOWN ANCHOR BOLTS MAY BE SUBSTITUTED WITH 5/8" DIA. POWERS WEDGE BOLTS FOR THE FOLLOWING HOLDOWNS: LTT31, HTT16, HD2A, HD5A, PHD2, AND PHD5. PROVIDE 11" MIN. EMBEDMENT AT PHD5. PROVIDE 8" MIN. EMBEDMENT FOR ALL OTHER HOLDOWNS. DISTANCE TO CORNER SHALL NOT BE LESS THAN THE EMBEDMENT. MIN. EDGE DISTANCE SHALL BE 1 3/4". DO NOT INSTALL AT VISIBLE CRACK IN CONCRETE. SPECIAL INSPECTION REQUIRED.

M. SUBMITTALS

1. SHOP DRAWINGS OR REPORTS FOR THE FOLLOWING ITEMS SHALL BE SUBMITTED TO THE STRUCTURAL ENGINEER OF RECORD PRIOR TO FABRICATION OR CONSTRUCTION (AS APPLICABLE) U.N.O.

   CONCRETE CYLINDER TESTS
   GLULAM BEAMS
   HIGH STRENGTH GROUT/DRYPACK
   POST-TENSIONED REINFORCING
   POST-TENSIONED TENDON ELONGATIONS
   STRUCTURAL STEEL

2. CONTRACTOR SHALL REVIEW AND STAMP SHOP DRAWINGS PRIOR TO SUBMITTING. CONTRACTOR'S REVIEW SHALL CHECK FOR COMPLETENESS/COMPLIANCE WITH CONTRACT DOCUMENTS.

3. SHOP DRAWINGS ARE REVIEWED BY ENGINEER ONLY FOR GENERAL COMPLIANCE WITH THE STRUCTURAL DRAWINGS. RESPONSIBILITY FOR CORRECTNESS SHALL REST WITH THE CONTRACTOR. SHOP DRAWINGS DO NOT SUPERSEDE OR REPLACE THE CONTRACT DRAWINGS OR SPECIFICATIONS. CHANGES, SUBSTITUTIONS, OR DEVIATIONS FROM CONTRACT DRAWINGS AND/OR SPECIFICATIONS WILL NOT BE ACCEPTED VIA SHOP DRAWING REVIEW. ALL SUCH MODIFICATIONS SHALL BE SUBMITTED SEPARATELY FOR ENGINEER'S REVIEW.

4. PREFABRICATED COMPONENTS, SPECIALTY ITEMS, OR DESIGN-BUILD ELEMENTS NOTED ON THE STRUCTURAL DRAWINGS, BUT WHICH REQUIRE THE MFR. OR SUPPLIER TO PROVIDE THE DESIGN, MAY BE SUBMITTED TO THE ARCHITECT AND/OR ENGINEER FOR REVIEW AS A DEFERRED SUBMITTAL. DEFERRED SUBMITTALS REQ'D. BY THE STRUCTURAL ENGINEER OF RECORD SHALL INCLUDE, BUT NOT BE LIMITED TO, THE FOLLOWING:

   CONCRETE MIX DESIGNS
   ENGINEERED WOOD JOISTS AND BEAMS
   EXTERIOR CURTAINWALLS, CLADDING, AND VENEER
   EXTERIOR SIGNAGE
   POST-TENSIONED TENDON FRICTION/LOSS CALCULATIONS
   PREFABRICATED WOOD TRUSSES
   SKYLIGHTS
   STAIRS, HANDRAILS, GUARDRAILS, AND THEIR COMPONENTS
   SUPPORT/ANCHORAGE OF MECH., ELECT., AND PLUMBING EQUIPMENT AND COMPONENTS

5. DEFERRED SUBMITTALS SHALL INCLUDE CALCULATIONS AND DRAWINGS PREPARED AND STAMPED BY AN APPROPRIATELY LICENSED ENGINEER (SPECIALTY ENGINEER) SHOWING LOCATION AND MAGNITUDE OF LOADS, CONFIGURATION AND SIZE OF MEMBERS, AND COMPATIBILITY OF SUBMITTAL ITEM WITH THE PRIMARY STRUCTURAL SYSTEM.

6. THE PURPOSE OF THE STRUCTURAL ENGINEER'S REVIEW OF DEFERRED SUBMITTALS SHALL BE LIMITED TO DETERMINING THAT THE DRAWINGS AND CALCULATIONS HAVE BEEN PROPERLY SEALED, THAT THE LOAD CRITERIA IS IN GENERAL CONFORMANCE WITH THE CONTRACT DOCUMENTS AND WITH THE REFERENCED BUILDING CODE, THAT CONNECTIONS TO THE PRIMARY STRUCTURE ARE COMPATIBLE WITH THE PRIMARY DESIGN, AND THAT THE PRIMARY STRUCTURE IS CAPABLE OF SUPPORTING THE IMPOSED LOADS.

7. THE STRUCTURAL ENGINEER WILL RELY UPON THE SPECIALTY ENGINEER'S SEAL AS CERTIFICATION THAT THE ITEMS DESIGNED BY THE SPECIALTY ENGINEER COMPLY WITH THE CRITERIA SET FORTH IN THE CONTRACT DOCUMENTS AND APPLICABLE CODES AND STANDARDS. THE STRUCTURAL ENGINEER SHALL NOT BE RESPONSIBLE FOR THE ADEQUACY OF DESIGNS PROVIDED BY OTHERS.

8. FOR ALL SUBMITTALS, ANY CORRECTIONS NOTED WILL BE MARKED ON ONE (1) COPY SET ONLY AND RETURNED. ADDITIONAL COPIES OF ANY SUBMITTAL WILL BE RETURNED UNMARKED. CONTRACTOR SHALL BE RESPONSIBLE FOR REPRODUCING ENGINEER'S CORRECTIONS ON ADDITIONAL COPIES REQ'D. ONE COPY SET MAY BE RETAINED FOR THE ENGINEER'S RECORDS. ALLOW FIVE (5) TO TEN (10) WORKING DAYS FOR THE ENGINEER'S REVIEW.

9. REFER TO APPLICABLE G.S.N. SECTIONS FOR FURTHER REQUIREMENTS SPECIFIC TO INDIVIDUAL SUBMITTALS.

N. SPECIAL INSPECTION

1. IN ADDITION TO STANDARD INSPECTIONS BY THE BUILDING OFFICIAL REQUIRED PER IBC SECTION 109, THE OWNER SHALL EMPLOY ONE OR MORE SPECIAL INSPECTORS WHO SHALL PROVIDE INSPECTIONS DURING CONSTRUCTION FOR THE TYPES OF WORK LISTED IN THIS SECTION.

2. THE SPECIAL INSPECTOR SHALL BE A QUALIFIED PERSON WHO SHALL DEMONSTRATE COMPETENCE, TO THE SATISFACTION OF THE BUILDING OFFICIAL, FOR INSPECTION OF THE PARTICULAR TYPE OF CONSTRUCTION OR OPERATION REQUIRING SPECIAL INSPECTION.

3. THE CONTRACTOR SHALL BE RESPONSIBLE FOR PROVIDING THE SPECIAL INSPECTOR AT LEAST 24 HOURS NOTICE PRIOR TO PERFORMING ANY WORK REQUIRING SPECIAL INSPECTION.

4. THE SPECIAL INSPECTOR SHALL INSPECT THE WORK ASSIGNED FOR CONFORMANCE WITH THE APPROVED CONTRACT DRAWINGS AND SPEC'S. THE SPECIAL INSPECTOR SHALL FURNISH INSPECTION REPORTS TO THE BUILDING OFFICIAL, THE ENGINEER OF RECORD, AND OTHER DESIGNATED PERSONS. ALL DISCREPANCIES SHALL BE BROUGHT TO THE IMMEDIATE ATTENTION OF THE CONTRACTOR FOR CORRECTION, THEN, IF UNCORRECTED, TO THE ENGINEER AND THE BUILDING OFFICIAL. THE SPECIAL INSPECTOR SHALL SUBMIT A FINAL SIGNED REPORT STATING WHETHER THE WORK REQUIRING SPECIAL INSPECTION WAS, TO THE BEST OF THE INSPECTOR'S KNOWLEDGE, IN CONFORMANCE WITH THE APPROVED PLANS AND SPEC'S AND THE APPLICABLE CODE PROVISIONS.

5. INSPECTORS SHALL INSPECT FROM AN APPROVED SET OF CONTRACT DRAWINGS. SHOP DRAWINGS SHALL NOT BE USED IN LIEU OF THE APPROVED CONTRACT DRAWINGS FOR INSPECTION PURPOSES.

6. TYPES OF WORK TO BE INSPECTED BY THE SPECIAL INSPECTOR ARE AS FOLLOWS:

6.1. DURING ALL EPOXY ANCHORING OPERATIONS FOR BOLTS, REBAR, THREADED ROD, ETC., INCLUDING VERIFICATION OF BOLT OR BAR MATERIALS, HOLE DEPTH AND DIA., HOLE CLEANOUT, EPOXY MIXING AND PLACEMENT PROCEDURES, AND EMBEDMENT DEPTH IN ACCORDANCE WITH THE CONTRACT DRAWINGS AND MFR.'S SPEC.'S AND RECOMMENDATIONS.

6.2. DURING INSTALLATION OF ALL EXPANSION ANCHOR BOLTS TO VERIFY COMPLIANCE WITH MFR.'S SPEC.'S AND RECOMMENDATIONS.

6.3. CONCRETE CONSTRUCTION PER IBC SECTION 1704.4 AND TABLE 1704.4.
EXCEPTION: SPECIAL INSPECTIONS SHALL NOT BE REQ'D. FOR:
1. ISOLATED SPREAD OR CONTINUOUS CONCRETE FOOTINGS SUPPORTING WALLS OF BUILDINGS (3) STORIES OR LESS IN HEIGHT WHOSE STRUCTURAL DESIGN IS BASED ON A 28 DAY DESIGN COMPRESSIVE STRENGTH, f'c, OF NO GREATER THAN 2500 PSI.
2. POST-TENSIONED SLABS ON GRADE WHERE EFFECTIVE PRESTRESS IN THE CONCRETE IS LESS THAN 150 PSI.

6.4. STEEL CONSTRUCTION AND WELDING PER IBC SECTION 1704.3 AND TABLE 1704.3.

6.5. MASONRY CONSTRUCTION PER IBC 1704.5.2 AND TABLE 1704.5.1.

7. CERTIFICATE OF APPROVAL REGARDING MATERIALS AND INSPECTION OF PREFABRICATED ITEMS SHALL BE PROVIDED IN ACCORDANCE WITH IBC SECTION 1704.

07-19993
Clark County Dev. Services
Building Services Division
AUG 06 2007 DL
Reviewed and Accepted
Wilidan

WRIGHT one source
7425 PEAK DRIVE LAS VEGAS, NEVADA 89128
p 702.933.7000 f 702.933.7001 800.933.7611
WRIGHTENGINEERS.COM
LAS VEGAS :: IRVINE :: PHOENIX :: SALT LAKE

S02-070571-G

THIS DRAWING IS AN INSTRUMENT OF SERVICE BETWEEN THE ARCHITECT AND HIS CLIENT, BUT REMAINS THE PROPERTY OF THE ARCHITECT.
© ALL RIGHTS RESERVED 2007

architecture/engineering/site
GARY GUY WILSON
7625 Dean Martin Drive, Suite#100
Las Vegas, Nevada 89139
planning/interior design
AIA ARCHITECTS, PC
(702)876-0668
professional corp / certified n.c.a.r.b.
CONSULTANTS:
CIVIL: CIVILWORKS, INC.
STRUCTL: WRIGHT ENGINEERS
ELEC: SH NEVADA
MECH: SH NEVADA

CARL'S JR RESTAURANT
@ RUSSELL ROAD & EASTERN AVE.
McCARRAN MARKETPLACE
FOR: S.L. INVESTMENTS, MR. STEVE LARSON
CLARK COUNTY, NEVADA

PROJ.NO.	070571
PROJ.ARCH.	
PROJ.MGR.	BDU
JOB CAPT.	SCG
TECH'N	
ARCH.CHK.	
PH-2/3	
PH-4	
PH-5	

REVISIONS

PRINTS REQUIRE ARCHITECT'S SEAL & SIGN. FOR PROOF OF VALIDITY

STATE OF NEVADA
STEVEN C. GOULD
EXPIRES 12/31/07
CIVIL
STRUCTURAL
PROFESSIONAL ENGINEER
No. 11329
APR 18 2007

GENERAL STRUCTURAL NOTES (CONT'D.)

SHT.NO. S0.2

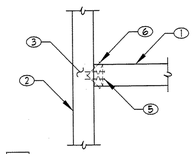

A OPTION A

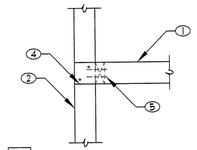

B OPTION B

1. INTERIOR WALL
2. EXTERIOR WALL
3. DO NOT NOTCH TOP PLATE
4. BREAK IN TOP PLATE FOR INTERIOR WALL. LAP SHALL BE TREATED AS TYPICAL TOP PLATE BREAK PER FRAMING PLAN NOTE. ATTACH LAP TO TOP PLATE w/ (2) 16d
5. (2) 16d AT 24" o.c. TO FULL HEIGHT STUD(S) OR BLOCKING. FASTEN BLOCKING TO ADJACENT STUDS w/ (2) 16d EACH END
6. (2) 16d TOENAILS EACH PLATE, (4) TOTAL. AT NON-LOAD BEARING INTERIOR WALLS, TOENAIL TOPMOST PLATE FROM TOP TO AVOID SPLITTING

A. APPLICABLE AT ALL INTERIOR/EXTERIOR INTERSECTIONS U.N.O. ON PLANS

B. ADDITIONAL STUD(S) AS REQUIRED AT THE ENDS OF SHEARWALLS NOT SHOWN FOR SIMPLICITY

09 INTERIOR/EXTERIOR WALL INTERSECTION

WA01-22 030715 NO SCALE

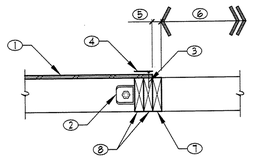

PLAN VIEW

1. SHEAR WALL SHEATHING PER PLAN. SHEATHING NEED NOT EXTEND ONTO TRIMMER STUD(S)
2. BOLTED HOLDOWN AS OCCURS PER PLAN
3. SHEAR WALL EDGE NAILING INTO END STUD
4. STRAP HOLDOWN AS OCCURS PER PLAN. HOLDOWN NAILS MAY COUNT AS PLYWOOD EDGE NAILING
5. 1 1/2" MIN. FROM ROUGH OPENING TO PLYWOOD SHEAR WALL SHEATHING AT WINDOW
6. OPENING
7. TRIMMER STUD(S)
8. SHEAR WALL END STUDS/POST PER PLAN MAY COUNT AS KING STUDS AS REQUIRED PER PLAN

10 TYPICAL END OF PLYWOOD SHEAR WALL AT OPENING

WA08-10 BTP.060525 NO SCALE

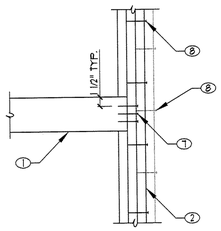

AT KING STUD(S)

1. HEADER PER PLAN
2. KING POST / STUD(S) PER PLAN
3. A34 CLIP PER TABLE A. MAY BE INSTALLED TOP OR BOTTOM FOR SINGLE CLIP
4. ALTERNATE CLIP LOCATION
5. WITH ALTERNATE LOCATION, FASTEN TRIMMER / CRIPPLE PER TABLE A
6. CLIP NOT REQUIRED ON TOP OF HEADER IF HEADER IS FASTENED TO TOP PLATE (BUILT UP TOP PLATE). IF SINGLE CLIP IS REQUIRED, IT MAY BE IGNORED FOR THIS SITUATION
7. (2) 16d AT 3" o.c.
8. 16d AT 16" o.c. U.N.O. ON PLAN, EA. MEMBER AT MULTIPLE KING STUDS

HEADER LENGTH	TOTAL No. A34	CRIPPLE TO KING POST
6'-0" OR LESS	1	(4) 16d TOTAL
6'-1" TO 11'-0"	2	(7) 16d TOTAL
16' AND LONGER GARAGE DOOR HEADER	2	(7) 16d TOTAL

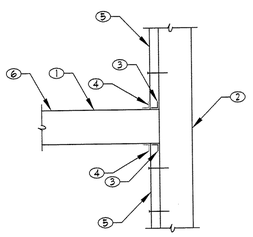

AT KING POST

11 TYPICAL HEADER TO POST CONNECTION

WA01-34 DAB.060926 NO SCALE

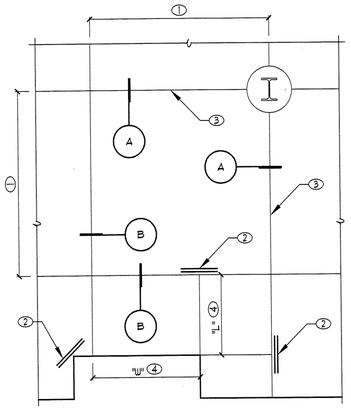

TYPICAL CONTROL JOINT LAYOUT

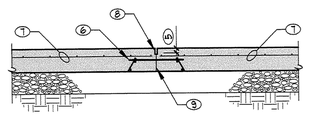

A CONTROL JOINT AT COLUMN LINES / CONSTRUCTION JOINT

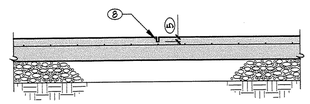

B SAW-CUT JOINT BETWEEN COLUMN LINES

1. JOINTS TO BE EQUALLY SPACED BETWEEN COLUMN LINES EACH DIRECTION NOT TO EXCEED MAX. SPACING PER SCHEDULE
2. PROVIDE (2) #4 x 48" MID-HEIGHT SLAB BARS ADJACENT TO ALL DISCONTINUOUS JOINT LOCATIONS.
3. ALIGN CONTROL JOINTS w/ COLUMN EACH DIRECTION
4. WHERE CONTROL JOINT SECTIONS ARE RECTANGULAR, THE WIDTH "W" SHALL NOT EXCEED 1.5 TIMES THE LENGTH "L"
5. DEPTH EQUAL TO 1/4 SLAB THICKNESS
6. 3/4" DIA. MIN. x 16" SMOOTH DOWEL AT 24" o.c. LIGHTLY GREASE FULL LENGTH OF DOWEL OR WRAP END TO PREVENT BOND TO CONCRETE. CENTER IN SLAB THICKNESS AT JOINT. DOWEL BASKETS SHALL BE USED TO MAINTAIN ALIGNMENT OF DOWELS WHILE CONCRETE IS POURED
7. STOP SLAB REINF. (AS OCCURS) EACH SIDE OF JOINT
8. SAW-CUT JOINT. SAW CUT SHALL BE MADE SOON ENOUGH TO PREVENT SHRINKAGE CRACKING, BUT NOT SO SOON AS TO CAUSE SPALLING

JOINT SPACING SCHEDULE	
SLAB THICKNESS	MAX SPACING
4"	10'
5"	12, 5'
6"	15'
7"	17, 5'
8"	18'

9. OPTIONAL CONSTRUCTION JOINT NEED ONLY OCCUR AT EXPOSED EDGES OF DISCONTINUOUS SLAB PLACEMENT, U.N.O.

A. ZIP STRIP OR TOOLED JOINT MAY BE USED IN LIEU OF SAW CUT.

B. WHERE COLUMN LINES ARE NOT PRESENT, SPACING OF DOWELED CONTROL JOINTS AS SHOWN IN SECTION "A" SHALL NOT EXCEED 1/20 x SLAB THICKNESS OR 30', WHICHEVER IS LESS. BAY LENGTH TO WIDTH RATIO SHALL NOT EXCEED 1.5. PROVIDE SAW-CUT CONTROL JOINTS BETWEEN DOWELED JOINTS AT MAX. SPACING NOTED IN SCHEDULE.

06 TYPICAL CONTROL JOINT IN SLAB ON GRADE

F01-28 RCM.060726 NO SCALE

B. AT HOLE LARGER THAN 2" DIA. AT 2x4 WALL OR AT NOTCH PLACE STUD DIRECTLY UNDER ANY TRUSS LOCATED IN THE STUD BAY CONTAINING THE HOLE/NOTCH

C. AT PENETRATIONS AND NOTCHES LARGER THAN NOTED ABOVE USE H5-24 HARDY SADDLE (PFC-5342) w/ (24) 16d. HARDY SADDLE MAY BE INSTALLED UPSIDE-DOWN.

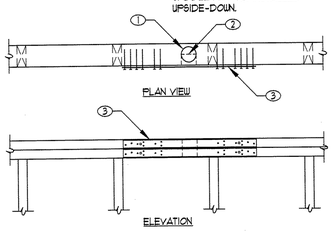

PLAN VIEW

ELEVATION

1. 2 9/16" MAX. DIAMETER HOLE AT 2x4 WALL. 4" MAX. DIAMETER HOLE AT 2x6 WALL. CENTER HOLE IN TOP PLATES
2. 1 3/4" DEEP x 2 1/2" LONG NOTCH IN TOP PLATES ALLOWED AT HVAC LINE SETS ONLY
3. RPS22 (OR RPS28) w/ (16) 16d, OR CS16 x 32" w/ (26) 8d, EACH PLATE, EXCEPT PER NOTE A

A. NO STRAP REQ'D. WHERE PLATES ARE STITCH NAILED ON BOTH SIDES OF HOLE w/ NAILS PER TABLE BELOW. NAILS MUST BE INSTALLED BETWEEN HOLE AND BREAK IN EITHER TOP PLATE. STITCH NAILING SHALL BE ONE OR TWO ROWS OF 16d STAGGERED AT 2" o.c. MIN.

PLATE	HOLE DIA.	NAILS
2x4	3/4" OR LESS	4
	1 3/4" OR LESS	10
2x6	2 1/2" OR LESS	4
	3 3/4" OR LESS	10

07 TYPICAL HOLE IN DOUBLE TOP PLATE

WA01-23 BTP.070116 NO SCALE

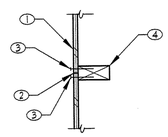

A SINGLE PANEL EDGE FRAMING (ALL SHEAR WALLS)

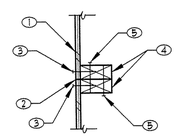

B DOUBLE PANEL EDGE FRAMING (SHEAR WALLS SW1-SW16 ONLY)

1. SHEAR WALL SHEATHING PER PLAN
2. BREAK IN SHEATHING AT ADJOINING PANEL EDGES
3. EDGE NAILING PER PLAN
4. FRAMING AT ADJOINING PANEL EDGES. MIN. SIZE PER PLAN
5. STITCH NAIL FROM BOTH SIDES PER TABLE BELOW. STAGGER AS REQUIRED TO AVOID INTERFERENCE

MARK	STITCH NAILING
SW1-SW7	16d AT 16" o.c. MAX.
SW8-SW10	16d AT 10" o.c. MAX.
SW11	16d AT 6" o.c. MAX.
SW12-SW16	16d AT 4" o.c. MAX.

A. OPTION A MAY BE USED AT ALL SHEAR WALLS. OPTION B MAY BE USED AT SHEAR WALLS REFERENCED IN TABLE ABOVE AT CONTRACTOR'S OPTION

08 SHEAR WALL PANEL EDGE FRAMING

WA01-38 BTP.051123 NO SCALE

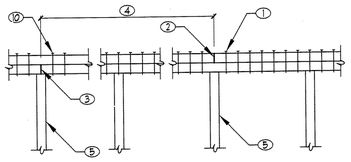

A SPLICE AT DOUBLE TOP PLATES

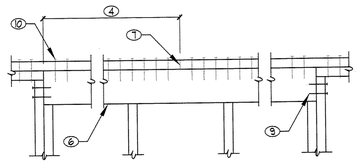

B SPLICE AT BEAM

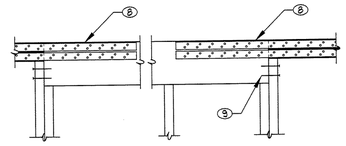

C SPLICE AT BEAM

1. (20) 16d EACH SIDE OF JOINT IN TOPMOST MEMBER OF DOUBLE TOP PLATE U.N.O. ON PLAN. NAILS IN SAME LINE 2" o.c. MIN. INCREASE NAIL SPACING (UP TO 8" o.c.), STAGGER NAILS AND SPACE EVENLY TO AVOID SPLITTING
2. JOINT IN TOPMOST MEMBER
3. JOINT IN BOTTOMMOST MEMBER
4. JOINTS IN DOUBLE TOP PLATES SHALL BE OFFSET 48" MIN.
5. ALIGN STUD BENEATH CENTER OF SPLICE AT BREAK IN EITHER MEMBER OF DOUBLE TOP PLATE
6. BEAM MAY ACT AS BOTTOMMOST MEMBER AS OCCURS
7. GHOSTED ITEMS INDICATE OPTIONAL SPLICE w/ NAILING PER 1 AT BEAMS EXCEEDING 8'-0" IN LENGTH. AT BEAMS LESS THAN 8'-0" IN LENGTH TOP PLATE SHALL RUN CONTINUOUS OVER BEAM. NO STRAPS REQUIRED FROM BEAM TO BOTTOMMOST PLATE
8. STRAPS PER NOTE A AT EACH END OF BEAM. CS16 STRAPS MAY BE CONT. w/ (2) 8d AT 4 1/8" o.c. TO BEAM AND (14) 8d TO TOP MOST TOP PLATE
9. BEAM TO KING STUD CONNECTION PER TYPICAL NAILING SCHEDULE
10. (4) 16d EACH SIDE OF JOINT IN BOTTOMMOST MEMBER

A. AT LOCATIONS WHERE TOP PLATE CANNOT BE LAP SPLICED, STRAP EACH PLATE w/ CS16 x 28" w/ (2) 8d AT 2 1/16" o.c. AND PROVIDE HALF OF NAILING PER 1 PRIOR TO JOINT IN EITHER TOPMOST OR BOTTOMMOST MEMBER.

B. AT CHANGE IN WALL THICKNESS TRANSITION, STRAP TOP PLATE PER NOTE A ABOVE OR RIP 2x6 CONTINUOUS TOPMOST PLATE DOWN TO 2x4 AND LAP SPLICE PER OPTION A

04 TYPICAL TOP PLATE SPLICE

WA01-21 BTP.070111 NO SCALE

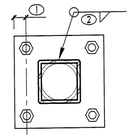

TYPE "A"

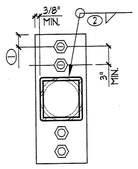

TYPE "B"

1. AISC MIN. EDGE DISTANCE OR EDGE DISTANCE TO ACCOMMODATE PLATE WASHER AND WELDS, WHICHEVER IS GREATER
2. 1/4" OR MIN. WELD SIZE PER AISC MANUAL TABLE J2.4, WHICHEVER IS GREATER. FOR BASE PLATES UP TO 3/4" THICK. 5/16" FOR BASE PLATES OVER 3/4" THICK

A. SEE PLAN OR SCHEDULE FOR BASE PLATE DIMENSIONS.

B. BASE PLATE CONNECTIONS MAY REQUIRE MORE ANCHOR BOLTS THAN SHOWN. SEE PLAN OR SCHEDULE FOR SIZE, TYPE, AND NUMBER OF BOLTS. SEE SCHEDULE BELOW FOR MAX. ANCHOR BOLT HOLE DIA.

BOLT DIA. (db)	MAX. HOLE DIA.
3/4" TO 1"	db + 5/16"
1" TO 2"	db + 1/2"
OVER 2"	db + 1"

05 TYPICAL COLUMN BASE PLATE SCHEDULE

09-070511 NO SCALE

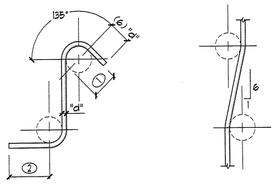

STIRRUP AND TIE HOOK

OFFSET BAR

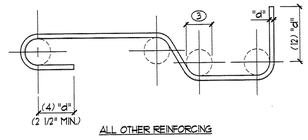

ALL OTHER REINFORCING

1. MINIMUM FINISHED BEND DIA. FOR STIRRUPS AND TIES ONLY. (4) "d" FOR #5 BAR AND SMALLER, (6) "d" FOR #6 THRU #8. TYPICAL
2. (6) "d" FOR #5 AND SMALLER (12) "d" FOR #6 THRU #8
3. MINIMUM FINISHED BEND DIA. FOR ALL REINFORCING EXCEPT STIRRUPS AND TIES (6) "d" UP TO #8 BAR, (8) "d" FOR #9 THRU #11, (12) "d" FOR #14 AND #18.

A. "d" = BAR DIA.

B. ALL REINFORCEMENT SHALL BE BENT COLD UNLESS NOTED OTHERWISE ON PLANS OR DETAILS

C. REINFORCING PARTIALLY EMBEDDED IN CONCRETE SHALL NOT BE FIELD BENT UNLESS SPECIFICALLY NOTED ON PLANS OR DETAILS

01 STANDARD REBAR BEND DETAILS

C01-01 010226 NO SCALE

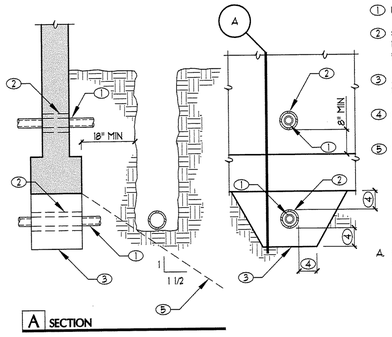

A SECTION

1. UTILITY PIPE
2. SLEEVE. SIZE TO PROVIDE 1/2" MIN. CLEARANCE AROUND UTILITY PIPE.
3. LEAN CONCRETE FILL. FORM SAME WIDTH AS FOOTING.
4. CLEARANCE EQUAL TO SLEEVE DIA. (6" MIN.)
5. NO PIPE TRENCH EXCAVATION ALLOWED BELOW THIS LINE.

A. PIPES SHALL NOT PASS THRU FOOTING NOR BE LOCATED BENEATH ISOLATED PAD FOOTING.

02 UTILITY PIPES AT FOOTING

F01-01 030715 NO SCALE

CONNECTION	MINIMUM NAILING, U.N.O. ON PLANS OR DETAILS
JOIST OR TRUSS TO TOP PLATE, SILL, ETC.	(3) 16d OR (3) 3" x 0.131", TOENAIL
BRIDGING TO JOIST	(2) 8d COMMON OR (2) 3" x 0.131", TOENAIL EACH END
BOTTOM PLATE TO JOIST OR BLOCKING (AT SHEAR WALLS, SEE SHEAR WALL SCHEDULE)	16d AT 16" o.c. OR 3" x 0.131" AT 8" o.c. FACE NAIL
TOP PLATE TO STUD	(2) 16d, (3) 3" x 0.131", END NAIL
TOP AND BOTTOM PLATE TO POST	(2) 16d, END NAIL FOR EACH 2" OF NOMINAL DEPTH
STUD TO BOTTOM PLATE	TOENAILS: (4) 8d COMMON OR (4) 3" x 0.131", (4) 16d AT 3x AND LARGER END NAILS: (2) 16d COMMON OR (3) 3" x 0.131", (2) 20d AT 3x
DOUBLE OR MULTIPLE BUILT-UP STUDS (POST)	16d AT 16" o.c. OR 3" x 0.131" AT 8" o.c. FACE NAIL
DOUBLE OR MULTIPLE TOP PLATES	16d AT 16" o.c. OR 3" x 0.131" AT 12" o.c. FACE NAIL
BLOCKING BETWEEN JOIST OR RAFTERS TO TOP PLATE	(3) 16d OR (3) 3" x 0.131", TOENAIL
RIM JOIST TO TOP PLATE	16d AT 6" o.c. OR 3" x 0.131" AT 6" o.c. TOENAIL
TOP PLATES, LAPS AND INTERSECTIONS	(2) 16d COMMON OR (3) 3" x 0.131", FACE NAIL
CONTINUOUS HEADER, TWO OR MORE LAMINATIONS	16d COMMON AT 16" o.c. ALONG EACH EDGE
CEILING JOISTS TO PLATE	(3) 16d OR (3) 3" x 0.131", TOENAIL
CONTINUOUS HEADER TO INTERMEDIATE SUPPORT(S)	(4) 8d COMMON TOENAIL
CEILING JOISTS, LAPS OVER PARTITIONS	(3) 16d COMMON OR (4) 3" x 0.131", FACE NAIL
CEILING JOISTS TO PARALLEL RAFTERS	(3) 16d COMMON OR (4) 3" x 0.131" FACE NAIL
RAFTER OR TRUSS TO PLATE	(3) 16d OR (3) 3" x 0.131", TOENAIL
CORNER G.T./RAFTER TO PLATE	(4) 16d, TOENAIL
BUILT-UP CORNER STUDS	16d AT 16" o.c. OR 3" x 0.131" AT 16" o.c.
KING STUD TO HEADER	SEE DETAIL 3/11

B. MISC. NAILING SHALL BE PER IBC TABLE 2304.9.1

A. SEE PLAN OR G.S.N. FOR TOP PLATE SPLICE CONNECTION.

03 TYPICAL NAILING SCHEDULE

SCH02-03 BTP.060929 NO SCALE

07-19993
Clark County Dev. Services
Building Services Division
AUG 06 2007 DL
Reviewed and Accepted
Wilidan

THIS DRAWING IS AN INSTRUMENT OF SERVICE BETWEEN THE ARCHITECT AND HIS CLIENT, BUT REMAINS THE PROPERTY OF THE ARCHITECT.
© ALL RIGHTS RESERVED 2007

planning/interior design
AIA ARCHITECTS, PC
(702)876-0668
professional corp / certified n.c.a.r.b.

architecture/engineering/site
GARY GUY WILSON
7625 Dean Martin Drive, Suite#100
Las Vegas, Nevada 89139

CONSULTANTS:
CIVIL: CIVILWORKS, INC. ELEC: SH NEVADA
STRUCTL: WRIGHT ENGINEERS MECH: SH NEVADA

CARL'S JR RESTAURANT
@ RUSSELL ROAD & EASTERN AVE.
McCARRAN MARKETPLACE
FOR: S.L. INVESTMENTS, MR. STEVE LARSON
CLARK COUNTY, NEVADA

PROJ.NO.	070571
PROJ.ARCH.	
PROJ.MGR	BDU
JOB CAPT.	SCG
TECH'N	
ARCH.CHK	
PH-2/3	
PH-4	
PH-5	

REVISIONS

PRINTS REQUIRE ARCHITECT'S SEAL & SIGN. FOR PROOF OF VALIDITY

STEVEN C. GOULD
Exp. 6-30-07
CIVIL STRUCTURAL
No. 11279
PROFESSIONAL ENGINEER STATE OF NEVADA

APR 18 2007

WRIGHT one source
7425 PEAK DRIVE LAS VEGAS, NEVADA 89128
p 702.933.7000 f 702.933.7001 800.933.7611
WRIGHTENGINEERS.COM
LAS VEGAS :: IRVINE :: PHOENIX :: SALT LAKE

S03-070571-D

TYPICAL DETAILS

SHT. NO. S0.3

K:\2007\070571\DWG\DSN\SD\S03-070571-D.dwg, 4/18/2007 10:37:49 AM, KP

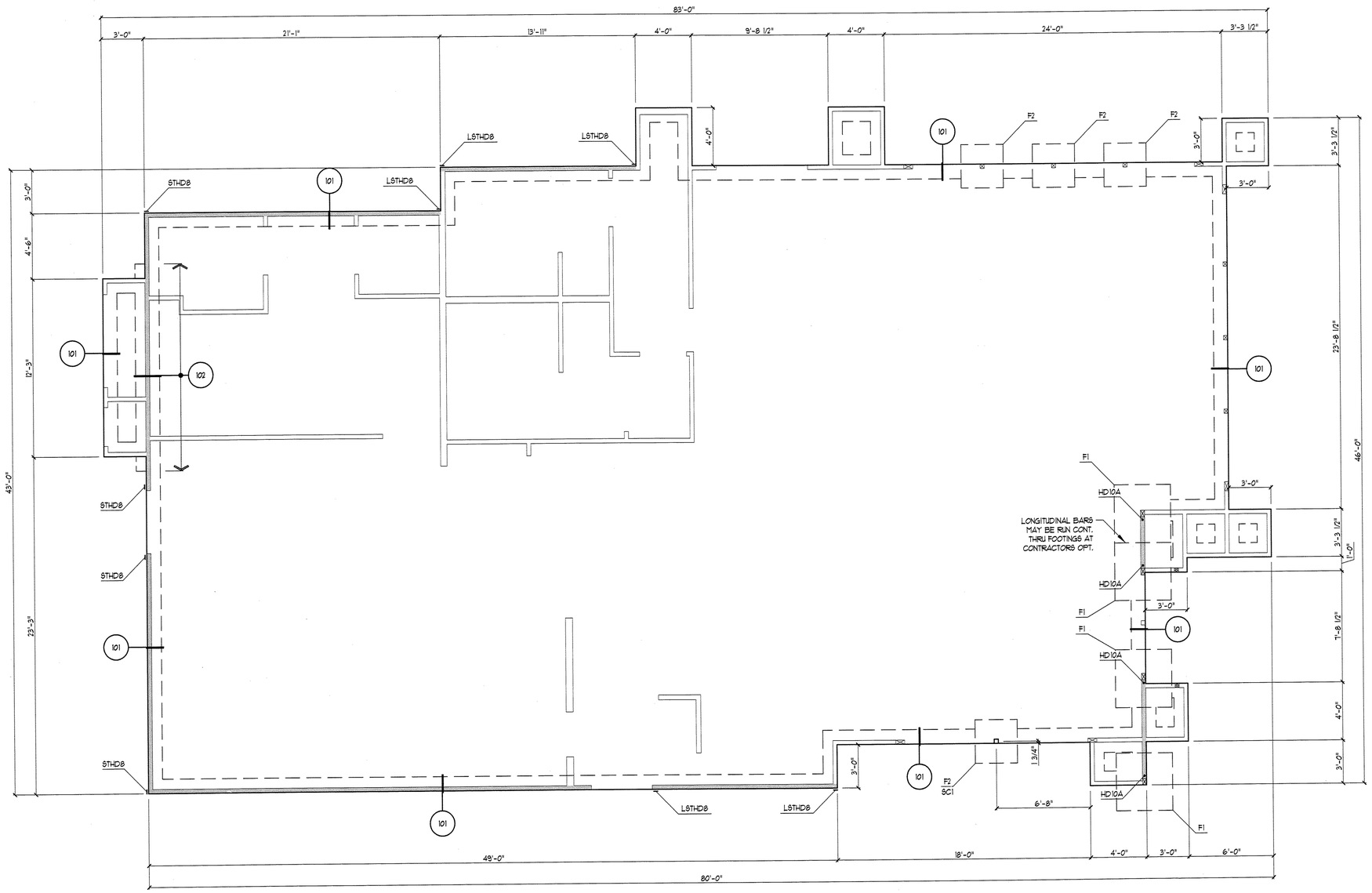

FOUNDATION PLAN

SCALE: 1/4" = 1'-0"

STEEL COLUMN (SC) SCHEDULE

A. FOR BASE PLATE CONFIGURATION, A.R. PATTERN, AND COLUMN-TO-BASE PLATE CONNECTION, SEE TYPICAL COLUMN BASE PLATE SCHEDULE.

B. STANDARD EFFECTIVE ANCHOR ROD EMBEDMENT = 7 1/2" U.N.O. EFFECTIVE EMBEDMENT SPECIFIED DENOTES MIN. DISTANCE REQ'D. BETWEEN T.O. CONCRETE AND T.O. EMBEDDED NUT U.N.O.

C. ORIENT LONG DIMENSION OF BASE PLATE PARALLEL TO WEB OF WIDE FLANGE COLUMN U.N.O.

MARK	SIZE	BASE PLATE	NOTES
SC1	HSS3 1/2x3 1/2x3/8	TYPE A 3/4" x 6" x 10" w/ (4) 3/4" DIA. A.R.	-

FOUNDATION PLAN NOTES

A. TYPICAL SLAB SHALL BE 5" THICK w/ #4 AT 18" o.c. E.W. CENTERED IN SLAB THICKNESS.

B. VERIFY ALL DIMENSIONS, ELEVATIONS, SLOPES, ETC., w/ ARCH'L. AND/OR CIVIL PRIOR TO CONSTRUCTION. RESOLVE DISCREPANCIES WITH ARCHITECT.

C. VERIFY LOCATION AND SIZE OF ALL INSERTS AND OPENINGS IN SLAB WITH ARCH'L., MECH., PLUMBING, AND ELECT. PRIOR TO CONSTRUCTION.

D. ALL FOOTINGS SHALL EXTEND 18 INCHES MIN. BELOW PAD GRADE. PAD GRADE IS DEFINED AS TOP OF SLAB FOR INTERIOR FOOTINGS, LOWEST ADJACENT COMPACTED SUBGRADE (PAD GRADE BEFORE LANDSCAPING) OR NATURAL GRADE WITHIN 5 FEET OF BUILDING FOR PERIMETER FOOTINGS, OR TOP OF EXTERIOR PAVING OR CONCRETE WHERE EXTERIOR PAVING OR CONCRETE IS PERMANENTLY LOCATED DIRECTLY ADJACENT TO BUILDING AND EXTENDS AT LEAST 5 FEET FROM BUILDING. FOOTING EXCAVATIONS SHALL BE CLEAN AND FREE FROM LOOSE DEBRIS, STANDING WATER, OR UNCOMPACTED MATERIAL AT TIME OF CONCRETE PLACEMENT. CONTRACTOR SHALL COORDINATE FOOTING EMBEDMENT WITH CIVIL GRADING PLANS TO ENSURE THAT MINIMUM EMBEDMENT SPECIFIED ABOVE IS MAINTAINED.

E. F1, F2, F3, . . . DENOTES FOOTING PER SCHEDULE THIS SHEET.

F. SC1, SC2, SC3, . . . DENOTES STEEL COLUMN PER SCHEDULE.

G. INSTALL SLAB CONTROL JOINTS PER DETAIL 06. MATCH CLOSURE POUR (WHERE PRESENT) CONTROL JOINTS WITH SLAB CONTROL JOINTS.

H. TYPICAL BOTTOM PLATE ANCHOR BOLTS AT EXTERIOR WALLS AND SHEAR WALLS SHALL BE 1/2" (MIN.) DIA. x 10" LONG "J" BOLT (EMBED 7") AT 48" o.c. U.N.O. MINIMUM OF (2) ANCHOR BOLTS PER BOTTOM PLATE PIECE. HOLDOWN ANCHORS DO NOT COUNT AS REPLACING ANCHOR BOLTS. LOCATE ANCHOR BOLTS WITHIN 12" OF END OF PLATE OR PLATE SPLICE. SEE PLAN FOR NON-TYPICAL ANCHOR BOLTS AT SHEAR WALLS.

I. SEE GENERAL STRUCTURAL NOTES FOR ANCHOR BOLT SUBSTITUTIONS AND HOLDOWN ANCHORAGE.

J. SEE DETAIL 02 FOR UTILITY PIPES AT FTGS.

SYMBOL LEGEND

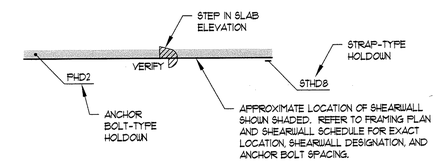

FOOTING (F) SCHEDULE

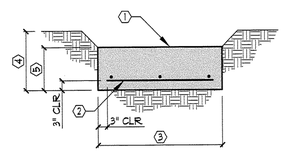

ISOLATED / CONTINUOUS FOOTING

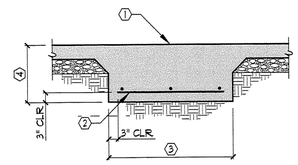

THICKENED SLAB FOOTING

1. SEE PLAN AND DETAILS FOR EMBEDDED ITEMS AND CONSTRUCTION ABOVE FOOTING
2. REBAR
3. WIDTH / LENGTH
4. THICKNESS PER SCHEDULE OR EMBED DEPTH PER G.S.N.
5. THICKNESS

A. TYPICAL EDGE OF SLAB TURNDOWN SHALL BE 12" WIDE MIN. w/ (2) #4 TOP AND BOTTOM U.N.O. ON PLAN OR SCHEDULE

B. ALL INTERIOR LOAD BEARING WALL FOOTINGS SHALL BE 18" WIDE MIN. AND 15" DEEP AND EXTEND 12" PAST END OF WALL w/ (2) #4 TOP AND BOTTOM U.N.O. ON PLAN OR SCHEDULE. REFER TO DETAIL 102 FOR ADDTIONAL INFORMATION. END OF WALL AT SHEAR WALLS IS EDGE OF STUD(S) / POST(S) AS OCCURS

MARK	WIDTH	LENGTH	THICKNESS	FOOTING REBAR	NOTES
F1	4'-0"	4'-0"	2'-3"	(4) #4 E.W., BOTTOM	-
F2	3'-0"	3'-0'	1'-6"	(3) #4 E.W., BOTTOM	-

07-19993
COUNTY RE SLASK
ZONING DIVISION
APPROVED
BY GDAVID 9/10/07
DATE

THIS DRAWING IS AN INSTRUMENT OF SERVICE BETWEEN THE ARCHITECT AND HIS CLIENT, BUT REMAINS THE PROPERTY OF THE ARCHITECT.
© ALL RIGHTS RESERVED 2007

architecture/engineering/site
GARY GUY WILSON
7625 Dean Martin Drive, Suite#100
Las Vegas, Nevada 89139
planning/interior design
AIA ARCHITECTS, PC
(702)876-0668
professional corp / certified n.c.a.r.b.

CONSULTANTS:
CIVIL: CIVILWORKS, INC.
STRUCTL: WRIGHT ENGINEERS
ELEC: SH NEVADA
MECH: SH NEVADA

CARL'S JR RESTAURANT
@ RUSSELL ROAD & EASTERN AVE.
McCARRAN MARKETPLACE
FOR: S.L. INVESTMENTS, MR. STEVE LARSON
CLARK COUNTY, NEVADA

PROJ.NO.	070571
PROJ.ARCH.	
PROJ.MGR.	BDU
JOB CAPT.	SCG
TECH'N	
ARCH.CHK	
PH-2/3	
PH-4	
PH-5	

REVISIONS

PRINTS REQUIRE ARCHITECT'S SEAL & SIGN. FOR PROOF OF VALIDITY

STATE OF NEVADA
STEVEN C. GOOLD
EXP. 6-30-07
PROFESSIONAL STRUCTURAL ENGINEER
No. 11171

APR 18 2007

WRIGHT one source
7425 PEAK DRIVE LAS VEGAS, NEVADA 89128
p 702.933.7000 f 702.933.7001 800.933.7611
WRIGHTENGINEERS.COM
LAS VEGAS :: IRVINE :: PHOENIX :: SALT LAKE

S11-070571-S

FOUNDATION PLAN

SHT.NO. S1.1

K:\2007\070571\SW\DS\Structural\S11-070571-S.dwg, 4/18/2007 10:37:18 AM, KP

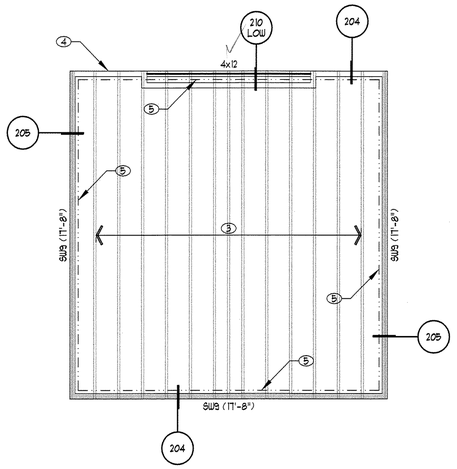

SECONDARY TOWER FRAMING PLAN

SCALE: 1/4" = 1'-0"

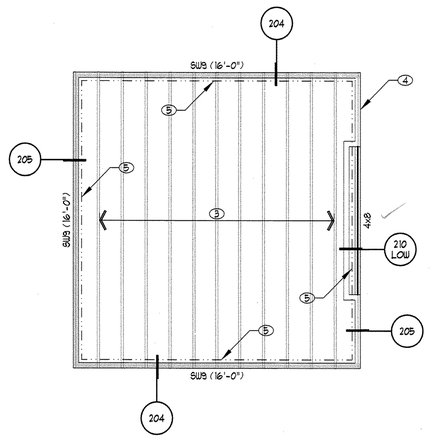

PRIMARY TOWER FRAMING PLAN

SCALE: 1/4" = 1'-0"

FRAMING PLAN KEYNOTES

1. ALIGN G.T. UNDER WALL ABOVE. TRUSS MFR. TO DESIGN TRUSS FOR 250 PLF DEAD LOAD AND 40 PLF LIVE LOAD WHERE TOWER WALL ALIGNS ABOVE
2. LINE OF WALL ABOVE. PROVIDE 4x4 BLOCKING w/ LUS44 EACH END TO TRUSS. AS AN ALTERNATE, PROVIDE (2) 2x4 BLOCKING w/ LUS24-2 EACH END TO TRUSS. TRUSS MFR. TO DESIGN TRUSSES FOR 350 PLF DEAD LOAD AND 200 PLF LIVE LOAD
3. 2x10 JOISTS AT 16" o.c. w/ LUS28 HANGER EACH END TO LEDGER
4. SHEATHE WALL w/ 3/8" PLYWOOD w/ 8d AT 6" o.c. EDGES AND 12" o.c. FIELD
5. 2x10 CONT. LEDGER w/ (4) 16d EACH STUD AND (3) 16d EACH BLOCK
6. STRAP SHEAR PANEL BLOCKING TO TOP PLATES AT EACH END w/ CONT. (2) CS14 w/ (2) 10d AT 4 1/8" o.c. LAP TOP PLATE 16" MIN. w/ (15) 10d EACH END
7. INSTALL SHEAR WALL SHEATHING PRIOR TO FRAMING PERPENDICULAR WALL, TYP.
8. SEE DETAIL 220 FOR TYPICAL OPENING IN ROOF DECK
9. SEE PRIMARY TOWER FRAMING PLAN FOR FRAMING ABOVE
10. SEE SECONDARY TOWER FRAMING PLAN FOR FRAMING ABOVE
11. SEE DETAIL 209 FOR TYPICAL SUPPORT CONNECTION OF KITCHEN HOOD
12. CLIP TRUSS TO TOP PLATE w/ H2.5

FRAMING PLAN NOTES

A. EXTERIOR WALL FRAMING SHALL BE 2x4 STUDS AT 16" o.c. U.N.O. INTERIOR LOAD BEARING WALLS TO BE FRAMED AT 16" o.c. U.N.O.

B. SW1, SW2, SW3, . . . DENOTES SHEAR WALL TYPE PER SCHEDULE THIS SHEET. ALL SHEAR WALLS SHALL BE CONSIDERED LOAD BEARING U.N.O.

C. ▨ DENOTES LOAD BEARING WALLS THAT MAY NOT APPEAR OBVIOUS.

D. DOUBLE 2x TOP PLATE REQ'D. AT ALL BEARING WALLS. SPLICE PER DETAIL 04.

E. SEE TYPICAL HOLE IN DOUBLE TOP PLATE DETAIL 07 FOR PENETRATIONS THROUGH TOP PLATES AT LOAD BEARING WALLS.

F. KS DENOTES KING STUD. KP DENOTES KING POST. TS DENOTES TRIMMER STUD. TP DENOTES TRIMMER POST. ES DENOTES END STUD. EP DENOTES END POST. MINIMUM (2) KS AND (2) TS REQ'D. AT ALL OPENINGS. PROVIDE CONTINUOUS BEARING TO FOUNDATION FOR (2) TS OR GREATER. POSTS SUPPORTING FLUSH BEAM OR G.T. SHALL EXTEND TO UNDERSIDE OF BOTTOMMOST TOP PLATE OF WALL. DOUBLE TOP PLATE SHALL RUN CONTINUOUS OVER POST AT FLUSH BEAM OR G.T. UNLESS POST CAP IS SPECIFIED OR U.N.O. ON PLAN.

G. ROOF FRAMING MEMBERS SHOWN ON PLANS INDICATE PREFABRICATED WOOD TRUSSES SPACED AT 32" o.c. MAX U.N.O. ANY BEAM OR HEADER CALLED OUT ON THE PLAN MAY BE REPLACED w/ PROPERLY DESIGNED PREFABRICATED WOOD TRUSS. SUBMIT SUBSTITUTIONS TO FOR FOR REVIEW.

H. "D =" DENOTES AXIAL FORCE DUE TO WIND OR SEISMIC FORCES TO BE INCLUDED IN APPROPRIATE LOAD COMBINATION BY TRUSS OR JOIST DESIGNER. FASTEN SHEATHING FULL LENGTH OF DRAG MEMBER w/ (1) ROW OF BOUNDARY FASTENERS AS NOTED BELOW. PROVIDE (2) ROWS (OR REDUCE THE FASTENER SPACING BY HALF, e.g.: 6" o.c. TO 3" o.c.) AT ALL INTERIOR DRAG MEMBERS U.N.O. ON PLAN.

I. ALIGN (2) STUDS (MIN.) BENEATH ALL GIRDER TRUSSES AT BEARING WALL. NAIL STUDS TOGETHER PER TYPICAL NAILING SCHEDULE. HIP GIRDERS w/ UP TO 8'-0" SETBACK AND UP TO 20'-0" SPAN MAY HAVE (1) STUD, U.N.O. PROVIDE CONTINUOUS BEARING TO FOUNDATION FOR ALL BEAMS AND GIRDER TRUSSES SUPPORTED BY (2) 2x OR LARGER POSTS.

J. ROOF SHEATHING AND FASTENERS SHALL BE AS FOLLOWS U.N.O. ON PLAN:
   1. 5/8" PLYWOOD PER G.S.N.
   2. 8d AT 6" o.c. BOUNDARY FASTENERS (DIAPHRAGM BOUNDARIES, SHEAR PANEL BLOCKING, SOLID BLOCKING AND DRAG MEMBERS AS NOTED ON FRAMING DETAILS).
   3. 8d AT 6" o.c. EDGE FASTENERS (AT SUPPORTED PANEL EDGES).
   4. 8d AT 12" o.c. FIELD FASTENERS (ALONG INTERMEDIATE FRAMING MEMBERS).
   5. **DO NOT USE STAPLES** (EXCEPTION: STAPLES MAY BE USED TO FASTEN SHEATHING TO TRUSS TAILS AND FASCIA AT EXPOSED EAVE OVERHANGS).

L. FASTENERS SHALL BE PLACED NOT LESS THAN 3/8" FROM PANEL EDGES AND SHALL BE FIRMLY DRIVEN INTO FRAMING MEMBERS. PANEL JOINT SHALL BE CENTERED ON FRAMING MEMBER. NO UNBLOCKED PANELS LESS THAN 24" WIDE SHALL BE USED. PROVIDE 1/8" GAP BETWEEN ROOF SHEATHING PANELS.

M. SHADED AREA DENOTES LOCATION OF OVERBUILD FRAMING PER DETAIL.

N. TRUSS UPLIFT REACTIONS ARE ACCOUNTED FOR ON THESE PLANS. DO NOT REFER TO TRUSS MFR. CALCULATIONS FOR TRUSS-TO-STRUCTURE UPLIFT REACTIONS.

O. SHEATHE ALL EXTERIOR WALL AND SOFFIT SURFACES w/ 3/8" PLYWOOD w/ 8d AT 6" o.c. EDGES AND 12" o.c. FIELD, U.N.O. ON PLAN

SHEAR WALL (SW) SCHEDULE

A. ALL SHEAR WALL FRAMING SHALL BE 2x U.N.O. FRAMING MAY BE WIDER THAN SPECIFIED, EXCEPT BOTTOM PLATES ON WOOD SHALL BE SIZED PER THIS SCHEDULE.

B. PROVIDE (2) FULL HEIGHT END STUDS (MIN.) EACH END OF SHEAR WALL U.N.O. ON PLAN OR DETAILS. STITCH NAIL STUDS w/ 16d AT 6" o.c. STAGGERED.

C. SHEAR WALL PANELS MAY BE INSTALLED EITHER HORIZ. OR VERT. U.N.O. ON PLAN OR WHERE SPECIFICALLY REQ'D. BY THE MFR. NO PANEL LESS THAN 24" WIDE (HORIZ. DIMENSION) SHALL BE USED. ALL PANEL EDGES SHALL BE CENTERED ON AND FASTENED DIRECTLY TO STUDS AND SOLID BLOCKING U.N.O. FASTENERS SHALL BE PLACED NOT LESS THAN 3/8" FROM PANEL EDGE AND SHALL BE FIRMLY DRIVEN INTO FRAMING MEMBERS. SUBSTITUTION OF ALT. NAILS OR STAPLES NOT PERMITTED w/o PRIOR WRITTEN APPROVAL OF EOR.

D. A.B. SIZE AND SPACING SHALL BE PER THIS SCHEDULE. SEE G.S.N. FOR ALLOWABLE A.B. SUBSTITUTIONS.

E. SHEAR WALL LENGTHS NOTED ON PLAN ARE MINIMUM LENGTHS. WHERE "STACKED" SPECIFIED ON PLAN, MIN. SHEAR WALL LENGTH SHALL MATCH SHEAR WALL BELOW AND HOLDOWNS, WHERE SPECIFIED, SHALL BE FASTENED TO SHEAR WALL END STUDS/POSTS BELOW.

F. BOTTOM PLATE NAILS SHALL BE 16d COMMON OR 16d BOX. STAGGER BOTTOM PLATE FASTENERS AT ELEVATED SHEAR WALLS.

G. PROVIDE SOLID 2x BLOCKING AND EDGE NAILING AT EDGES OF EXHAUST VENT IN SHEAR WALL.

H. SEE DETAIL 312 FOR FRAMING REQUIREMENTS AT ADJOINING SHEAR WALL PANEL EDGES.

I. ALL SHEAR WALL BOTTOM PLATE ANCHOR BOLTS (INCLUDING EXPANSION ANCHORS AND CONCRETE SCREWS) SHALL HAVE 3/16"x2"x2" PLATE WASHER BETWEEN NUT AND BOTTOM PLATE.

MARK	SHEATHING MATERIAL	EDGE NAILING	FIELD NAILING	BOTTOM PLATE A.B. AT CONC. / BOTTOM PLATE NAIL AT WOOD
SW3	3/8" PLYWD. ONE SIDE OF WALL	8d AT 6" o.c.	8d AT 12" o.c.	1/2" DIA. A.B. AT 33" o.c. / 16d AT 4" o.c.
SW11	15/32" PLYWD. ONE SIDE OF WALL. 3x FRAMING AT ADJOINING PANEL EDGES	10d AT 2" o.c. STAGGER AT BOTTOM PLATE & ADJOINING PANEL EDGES	10d AT 12" o.c.	1/2" DIA. A.B. AT 13" o.c. OR 3/4" DIA. A.B. AT 26" o.c. (BOTTOM PLATE MUST BE 3x) / SDS1/4x4 1/2" AT 3" o.c. (BOTTOM PLATE MUST BE 2x)

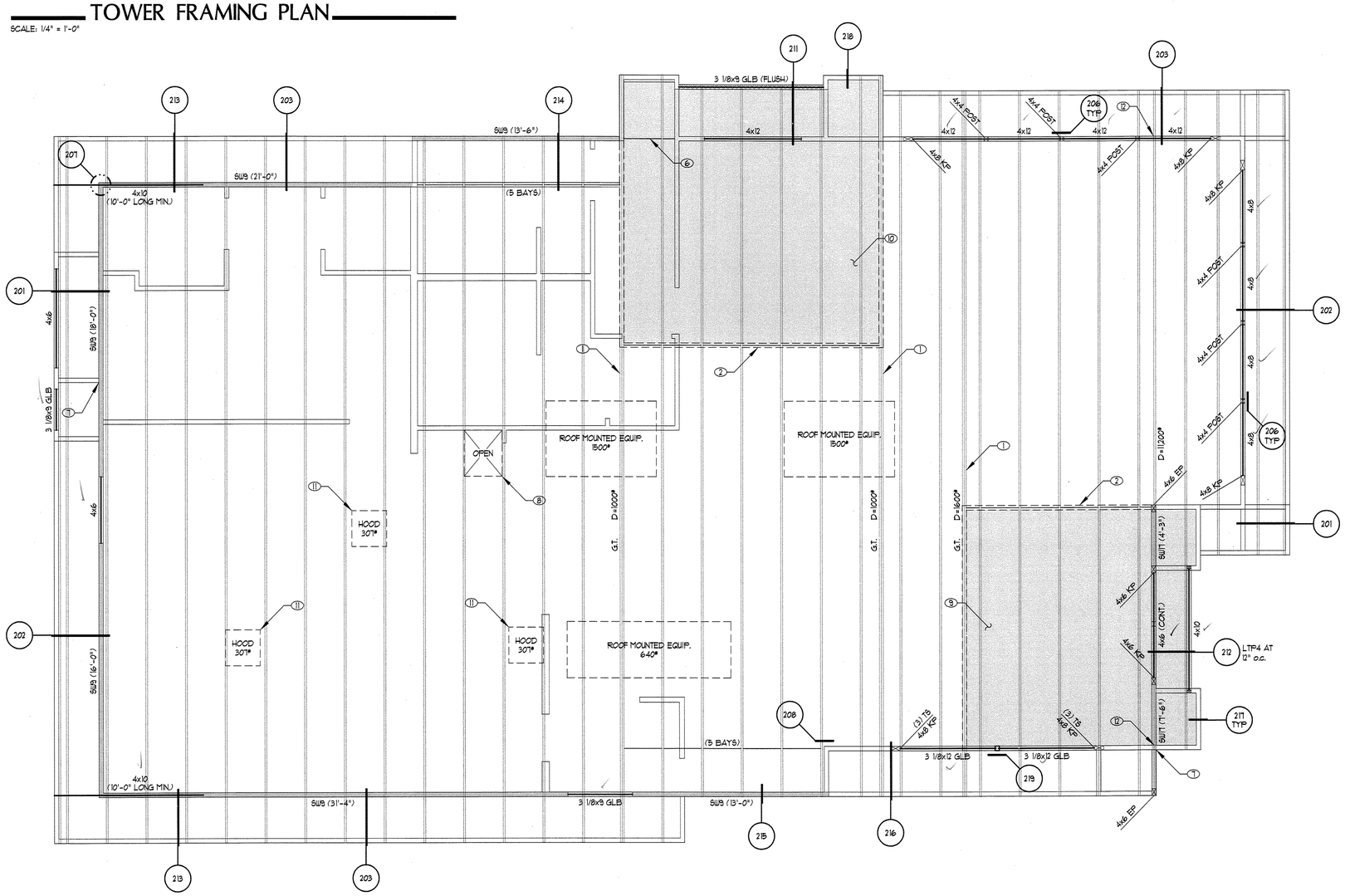

ROOF FRAMING PLAN

SCALE: 1/4" = 1'-0"

THIS DRAWING IS AN INSTRUMENT OF SERVICE BETWEEN THE ARCHITECT AND HIS CLIENT, BUT REMAINS THE PROPERTY OF THE ARCHITECT.
© ALL RIGHTS RESERVED 2007

architecture/engineering/site
GARY GUY WILSON
7625 Dean Martin Drive, Suite #100
Las Vegas, Nevada 89139
AIA ARCHITECTS, PC
planning/interior design
(702)876-0668
professional corp / certified n.c.a.r.b.

CONSULTANTS:
CIVIL: CIVILWORKS, INC.
STRUCTL: WRIGHT ENGINEERS
ELEC: SH NEVADA
MECH: SH NEVADA

CARL'S JR RESTAURANT
@ RUSSELL ROAD & EASTERN AVE.
McCARRAN MARKETPLACE
FOR: S.L. INVESTMENTS, MR. STEVE LARSON
CLARK COUNTY, NEVADA

PROJ.NO.	070571
PROJ.ARCH.	
PROJ.MGR.	BDU
JOB CAPT.	SCG
TECH'N	
ARCH.CHK	
PH-2/3	
PH-4	
PH-5	

REVISIONS

PRINTS REQUIRE ARCHITECT'S SEAL & SIGN. FOR PROOF OF VALIDITY

STATE OF NEVADA
STEVEN C. GOULD
EXP. 6-30-07
CIVIL
No. 11174
PROFESSIONAL ENGINEER

APR 18 2007

07-19993
Clark County Dev. Services
Building Services Division
AUG 06 2007
Reviewed and Accepted
Wilidan

WRIGHT one source
7425 PEAK DRIVE LAS VEGAS, NEVADA 89128
p 702.933.7000 f 702.933.7001 800.933.7611
WRIGHTENGINEERS.COM
LAS VEGAS :: IRVINE :: PHOENIX :: SALT LAKE

S21.070571-R

ROOF FRAMING PLAN

SHT.NO. S2.1

K:\2007\070571\SHD\Sheets\Bldg1\070571-R.dwg, 4/18/2007 10:37:50 AM, KP

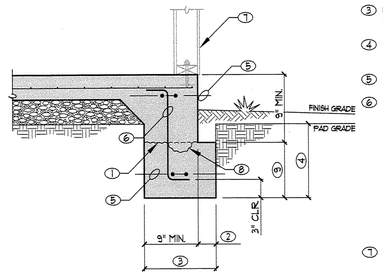

⑧ SCOOP OUT CONCRETE FOR HOLDOWN STRAP OR HOLDOWN ANCHOR BOLT AS OCCURS WITH MIN. 1" CONCRETE COVER

⑨ 9" MIN. FIRST POUR

① OPTIONAL POUR JOINT. ROUGHEN SURFACE TO 1/4" AMPLITUDE

② OPTIONAL OFFSET / WIDENED FOOTING AS REQ'D. FOR FORM STAKE

③ WIDTH PER PLAN OR SCHEDULE. 12 MIN.

④ MINIMUM EMBEDMENT PER FOUNDATION PLAN NOTES

⑤ REINFORCING PER PLAN

⑥ #4 "C" OR "Z" DOWEL REQ'D. ONLY AT OPTIONAL POUR JOINT. LOCATE (2) BARS WITHIN 18" OF OUTSIDE CORNERS, AND AT 4'-0" o.c. MAX. ELSEWHERE. LOCATE (1) BAR EACH SIDE OF HOLDOWN. SLOPE DOWEL SLIGHTLY AS REQ'D. TO CENTER AT POUR JOINT

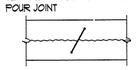

⑦ FRAMING ABOVE AND ANCHORAGE TO SLAB AS OCCURS

101 TYPICAL EDGE OF SLAB

101-070571 NO SCALE

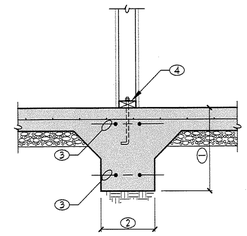

① MINIMUM EMBEDMENT PER FOUNDATION PLAN NOTES

② WIDTH PER PLAN OR SCHEDULE

③ REINFORCING PER PLAN OR SCHEDULE

④ CONTINUOUS SOLE PLATE. SEE G.S.N. OR SHEARWALL SCHEDULE FOR ANCHORAGE TO SLAB

102 INTERIOR STUD WALL AT FOOTING

102-070571 NO SCALE

07-19993
Clark County Dev. Services
Building Services Division
AUG 06 2007 DL
Reviewed and Accepted
Wilidan

WRIGHT one source
7425 PEAK DRIVE LAS VEGAS, NEVADA 89128
p 702.933.7000 f 702.933.7001 800.933.7611
WRIGHTENGINEERS.COM
LAS VEGAS :: IRVINE :: PHOENIX :: SALT LAKE

S31-070571-D

FOUNDATION DETAILS

THIS DRAWING IS AN INSTRUMENT OF SERVICE BETWEEN THE ARCHITECT AND HIS CLIENT, BUT REMAINS THE PROPERTY OF THE ARCHITECT.
© ALL RIGHTS RESERVED 2007

architecture/engineering/site
GARY GUY WILSON
7625 Dean Martin Drive, Suite#100
Las Vegas, Nevada 89139
planning/interior design
AIA ARCHITECTS, PC
(702)876-0668
professional corp / certified n.c.a.r.b.

CONSULTANTS:
CIVIL: CIVILWORKS, INC.
STRUCTL: WRIGHT ENGINEERS
ELEC: SH NEVADA
MECH: SH NEVADA

CARL'S JR RESTAURANT
@ RUSSELL ROAD & EASTERN AVE.
McCARRAN MARKETPLACE
FOR: S.L. INVESTMENTS, MR. STEVE LARSON
CLARK COUNTY, NEVADA

PROJ.NO.	070571
PROJ.ARCH.	
PROJ.MGR	BDU
JOB CAPT	SCG
TECH'N	
ARCH.CHK	
PH-2/3	
PH-4	
PH-5	

REVISIONS

PRINTS REQUIRE ARCHITECT'S SEAL & SIGN. FOR PROOF OF VALIDITY

STATE OF NEVADA
STEVEN C. GOOLD
EXP. 6-30-10
STRUCTURAL
No. 11775
PROFESSIONAL ENGINEER

APR 18 2007

SHT.NO. S3.1

K:\2007\070571\CWS\Structural\S31-070571-D.dwg, 4/18/2007 10:37:52 AM, KP

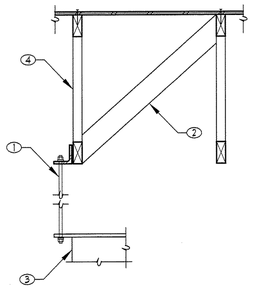

1. 3/8" THREADED ROD w/ BRACKET PER HOOD MFR SPECIFICATIONS
2. 2x4 BRACE w/ (2) 16d EACH END AT EACH ALL-THREAD CONNECTION
3. HOOD FRAME
4. TRUSS MFR TO DESIGN TRUSSES FOR HOOD LOAD (PER PLAN) ON BOTTOM CHORD

209 TYPICAL CONNECTION AT HOOD

209-070571 NO SCALE

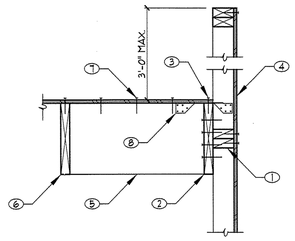

1. DOUBLE 2x BLOCK BETWEEN STUDS
2. LEDGER PER PLAN
3. BOUNDARY FASTENERS
4. SHEATHING PER PLAN
5. 2x BLOCKING AT 48" o.c. w/ (3) 16d EACH END. BLOCK DEPTH TO MATCH JOIST DEPTH
6. JOIST PER PLAN
7. 16d AT 6" o.c.
8. H2 EACH BLOCK TO STUD

205 WOOD LEDGER AT STUD WALL

205-070571 NO SCALE

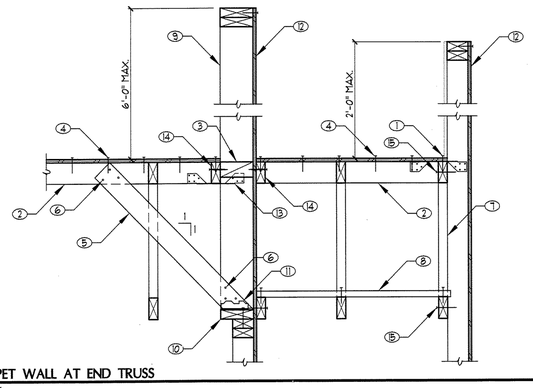

13. H2 AT 48" o.c.
14. 2x4 CONT LEDGER w/ (3) 8D@3300 TO EACH BLOCK
15. 16d EACH STUD

1. EDGE NAILING
2. 2x BLOCK AT 48" o.c. MAX. w/ SIMPSON A2 EACH BLOCK
3. 3x BLOCKING BETWEEN STUDS
4. 8d AT 6" o.c. ALONG BLOCK
5. 2x4 BRACE AT 48" o.c. MAX.
6. (3) 16d NAILS
7. PREFAB TRUSS BY TRUSS MFR.
8. 2x4 BLOCK AT 48" o.c. MAX. w/ (2) 16d EACH END TO TRUSS
9. 2x6 STUDS AT 16" o.c.
10. 2x6 CONT. w/ 16d AT 6" o.c. TO TOP PLATE
11. A35 EACH BRACE
12. SHEATHE WALL w/ 3/8" PLYWOOD w/ 8d AT 6" o.c. EDGES AND 12" o.c. FIELD

201 PARAPET WALL AT END TRUSS

201-070571 NO SCALE

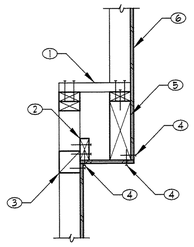

1. 2x4 LADDER BLOCKING AT 16" o.c. w/ (2) 16d EACH END
2. 2x4 LEDGER w/ (2) 16d EACH STUD
3. 4x BLOCKING BETWEEN STUDS
4. BOUNDARY FASTENERS
5. BEAM PER PLAN
6. SHEATHING PER PLAN

210 BEAM AT TOWER STUD WALL

210-070571 NO SCALE

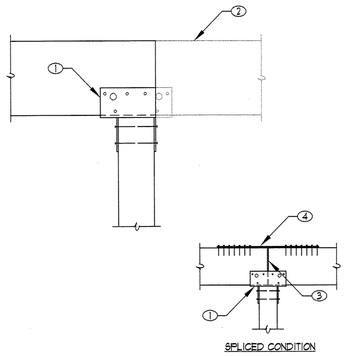

1. SIMPSON PC OR EPC TYPE POST CAP U.N.O. ON PLANS
2. BEAM CONTINUATION AS OCCURS - WHERE TWO BEAMS MEET AT POST, SPLICE DIRECTLY OVER CENTERLINE OF POST
3. SPLICE DIRECTLY OVER CENTERLINE OF POST
4. MSTC28, CENTER OVER SPLICE

206 WOOD BEAM AT WOOD POST

206 -070571 NO SCALE

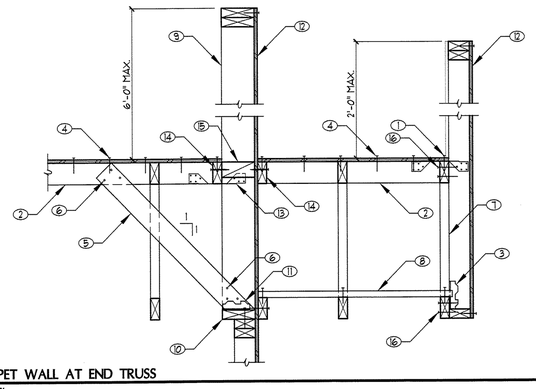

13. H2 AT 48" o.c.
14. 2x4 CONT LEDGER w/ (3) 8D@3300 TO EACH BLOCK
15. 3x BLOCKING BETWEEN STUDS
16. (2) 16d EACH STUD

1. EDGE NAILING
2. 2x BLOCK AT 48" o.c. MAX. w/ SIMPSON A2 EACH BLOCK
3. SIMPSON A35 AT EACH STUD
4. 8d AT 6" o.c. ALONG BLOCK
5. 2x4 BRACE AT 48" o.c. MAX.
6. (3) 16d NAILS
7. PREFAB TRUSS BY TRUSS MFR.
8. 2x4 BLOCK AT 48" o.c. MAX. w/ (2) 16d EACH END TO TRUSS
9. 2x6 STUDS AT 16" o.c.
10. 2x6 CONT. w/ 16d AT 6" o.c. TO TOP PLATE
11. A35 EACH BRACE
12. SHEATHE WALL w/ 3/8" PLYWOOD w/ 8d AT 6" o.c. EDGES AND 12" o.c. FIELD

202 PARAPET WALL AT END TRUSS

202-070571 NO SCALE

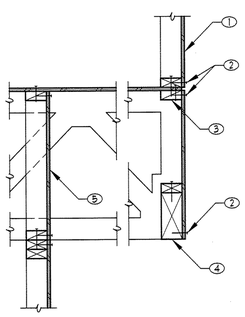

1. SHEATHING PER PLAN
2. BOUNDARY FASTENERS
3. 2x BLOCKING BETWEEN TRUSSES
4. BEAM PER PLAN. TRUSS MFR TO DESIGN TRUSS TO ACCOMMODATE BEAM
5. SHEAR PANEL BLOCKING PER G.S.N.

211 WOOD TRUSS AT WOOD BEAM

211-070571 NO SCALE

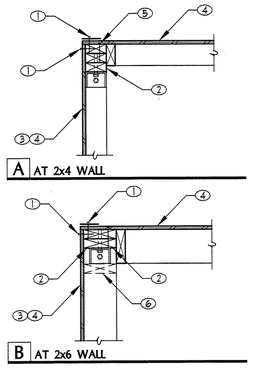

A AT 2x4 WALL

B AT 2x6 WALL

1. EDGE NAILING
2. DOUBLE END STUDS OR POST PER PLAN WITH BOLTED OR STRAP HOLDOWN PER PLAN
3. EXTEND SHEAR WALL WITH HOLDOWN TO END OF CORNER
4. SHEAR WALL SHEATHING
5. FACE NAIL STUDS TOGETHER w/ 16d AT SPACING TO MATCH SHEAR WALL EDGE NAILING OF THE SHEAR WALL REQUIRING THE CLOSEST SPACING
6. DRYWALL BACKING BLOCK AS REQ'D.

207 SHARED HOLDOWN AT CORNER - PLAN VIEW

WA01-10 BDW06-0926 NO SCALE

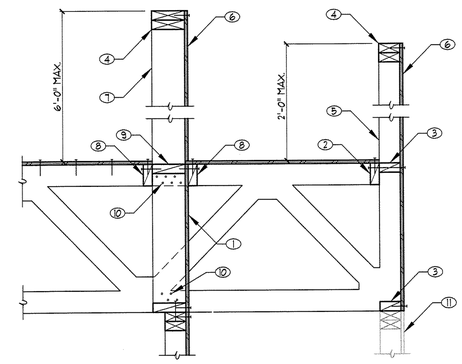

1. SHEAR PANEL BLOCKING PER G.S.N.
2. SOLID 2x BLOCKING w/ (3) 16d PER BLOCK
3. SOLID 2x BLOCKING
4. DOUBLE TOP PLATE
5. TRUSS MFR TO DESIGN TRUSS w/ PARAPET
6. SHEATHE PARAPET w/ 3/8" PLYWOOD w/ 8d AT 6" o.c. EDGES AND 12" o.c. FIELD
7. 2x6 STUDS AT EACH TRUSS. CONTINUE STUD TO BOTTOM OF TRUSS
8. 2x4 BLOCKING w/ (3) 16d EACH BLOCK
9. 2x BLOCKING BETWEEN STUDS
10. FASTEN PARAPET STUDS TO TRUSS w/ (6) 16d AT TOP AND (4) 16d AT BOTTOM
11. WALL BELOW AS OCCURS

203 WOOD TRUSS AT STUD WALL

203-070571 NO SCALE

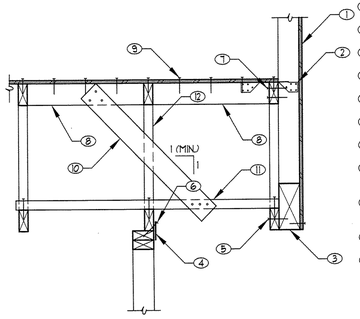

1. SHEATHING PER PLAN
2. H2 AT 48" o.c.
3. BEAM PER PLAN
4. LTP4, SPACING PER PLAN
5. 16d AT 6" o.c.
6. 16d TOE NAIL AT 8" o.c.
7. (2) 16d EACH STUD
8. 2x4 BLOCKING AT 48" o.c.
9. EDGE FASTENERS ALONG BLOCKING
10. 2x4 BRACE AT 48" o.c. w/ (3) 16d EACH END
11. 2x4 BLOCK w/ (2) 16d EACH TRUSS
12. DRAG TRUSS PER PLAN

212 WOOD TRUSS AT WOOD BEAM

212-070571 NO SCALE

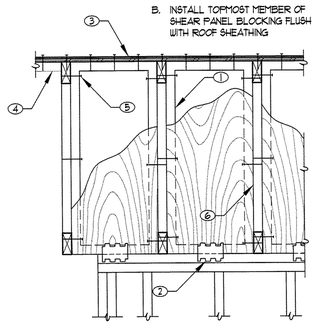

A. SHEAR WALL SHEATHING NOT SHOWN FOR CLARITY

B. INSTALL TOPMOST MEMBER OF SHEAR PANEL BLOCKING FLUSH WITH ROOF SHEATHING

1. SHEAR PANEL BLOCKING w/ SHEATHING AND NAILING PER G.S.N. OR MATCH PLYWOOD SHEAR WALL IN WALL LINE BELOW, WHICHEVER IS MORE STRINGENT. EXTEND FULL LENGTH OF WALL U.N.O. ON PLAN
2. (1) LTP4 PER BLOCK U.N.O. ON PLAN
3. CONT. CS16 STRAP U.N.O. ON PLAN w/ (2) 8d AT 4 1/8" o.c. EXTEND STRAP FULL LENGTH OF PANEL BLOCKING AND FLAT BLOCKING SHOWN ON PLAN
4. EXTEND 2x4 BLOCKING BEYOND END OF WALL WHERE NOTED ON PLAN
5. (2) 16d TOP AND BOTTOM AS SHOWN AND AT 12" o.c. IN BETWEEN
6. TRUSS MFR. TO PROVIDE VERT. WEB MEMBER AT SHEAR WALL TO RECEIVE NAILING PER 5

208 SHEAR PANEL BLOCKING ABOVE WALL

WA03-39 HA06-0926 NO SCALE

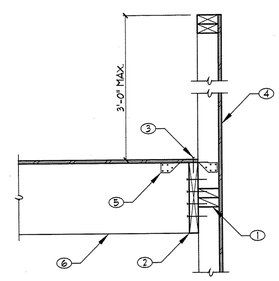

1. DOUBLE 2x BLOCKING BETWEEN STUDS
2. LEDGER PER PLAN
3. BOUNDARY FASTENERS
4. SHEATHING PER PLAN
5. H2 EACH JOIST TO STUD
6. JOIST PER PLAN

204 WOOD JOIST AT PARAPET WALL

204-070571 NO SCALE

THIS DRAWING IS AN INSTRUMENT OF SERVICE BETWEEN THE ARCHITECT AND HIS CLIENT, BUT REMAINS THE PROPERTY OF THE ARCHITECT.
© ALL RIGHTS RESERVED 2007

planning/interior design
AIA ARCHITECTS, PC
(702)876-0668
professional corp / certified n.c.a.r.b.

architecture/engineering/site
GARY GUY WILSON
7625 Dean Martin Drive, Suite#100
Las Vegas, Nevada 89139

CONSULTANTS:
CIVIL: CIVILWORKS, INC.
STRUCTL: WRIGHT ENGINEERS
ELEC: SH NEVADA
MECH: SH NEVADA

CARL'S JR RESTAURANT
@ RUSSELL ROAD & EASTERN AVE.
McCARRAN MARKETPLACE
FOR: S.L. INVESTMENTS, MR. STEVE LARSON
CLARK COUNTY, NEVADA

PROJ.NO.	070571
PROJ.ARCH.	
PROJ.MGR.	BDU
JOB CAPT.	SCG
TECH'N	
ARCH.CHK	
PH-2/3	
PH-4	
PH-5	

REVISIONS

PRINTS REQUIRE ARCHITECT'S SEAL & SIGN. FOR PROOF OF VALIDITY

STATE OF NEVADA
STEVEN C. GOULD
EXPIRES 6/30/07
CIVIL STRUCTURAL
No. 11729
PROFESSIONAL ENGINEER

APR 18 2007

07-19993
Clark County Dev. Services
Building Services Division
AUG 06 2007
Reviewed and Accepted
Willdan

WRIGHT one source
7425 PEAK DRIVE LAS VEGAS, NEVADA 89128
p 702.933.7000 f 702.933.7001 800.933.7611
WRIGHTENGINEERS.COM
LAS VEGAS :: IRVINE :: PHOENIX :: SALT LAKE

S41-070571-D

FRAMING DETAILS

SHT.NO. S4.1

K:\2007\070571\DWG\Structural\S41-070571-D.dwg, 4/18/2007 10:37:53 AM, KP

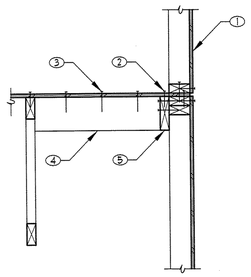

1. SHEATHING PER PLAN
2. BOUNDARY FASTENERS
3. 16d AT 6" o.c. TO BLOCKING
4. 2x6 BLOCKING AT 24" o.c. w/ (2) 16d EACH END
5. 2x6 LEDGER w/ 16d AT 6" o.c.

217 WOOD LEDGER AT STUD WALL

217-070571 NO SCALE

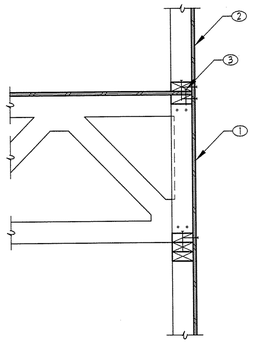

1. SHEAR PANEL BLOCKING BETWEEN TRUSSES PER G.S.N.
2. SHEATHING PER PLAN
3. BOUNDARY FASTENERS

218 WOOD TRUSS AT STUD WALL

218-070571 NO SCALE

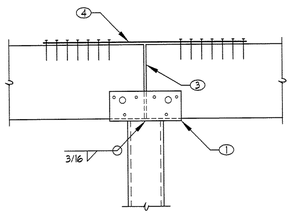

1. SIMPSON CCOQ TYPE POST CAP U.N.O. ON PLANS
2. BEAM CONTINUATION AS OCCURS - WHERE TWO BEAMS MEET AT POST, SPLICE DIRECTLY OVER CENTERLINE OF POST
3. SPLICE DIRECTLY OVER CENTERLINE OF POST
4. MSTC28 STRAP, CENTER OVER SPLICE

219 WOOD BEAM AT STEEL POST

219-070571 NO SCALE

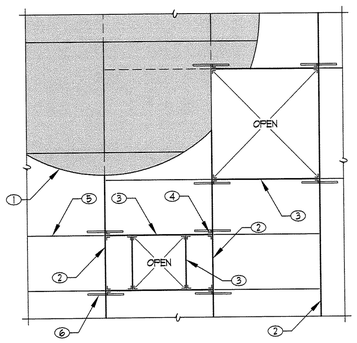

1. PLYWOOD SHEATHING
2. TYP. TRUSS PER PLAN
3. 2x8 FRAMING AT OPENINGS UP TO 4'-0" x 4'-0"
4. SIMPSON LB-TYPE HANGER
5. SOLID 2x BLOCK TO EXTEND BETWEEN TRUSSES (1) BAY EACH SIDE OF OPENING. EDGE NAIL SHEATHING AT BLOCKING, TYP.
6. SIMPSON ST18 STRAP FRAMING TO BLOCKING TYP. WHERE SHOWN. INSTALL STRAP ON TOP OF SHEATHING.

A. MINOR OPENINGS 12" SQUARE OR LESS REQUIRE NO SPECIAL FRAMING.
B. CONSULT STRUCTURAL ENGINEER FOR OPENINGS WIDER THAN 4'-0" NOT SPECIFICALLY DETAILED ON PLAN.
C. EDGE NAIL SHEATHING AT PERIMETER OF OPENING.

220 TYPICAL OPENING IN ROOF DECK

WA01-16 030711 NO SCALE

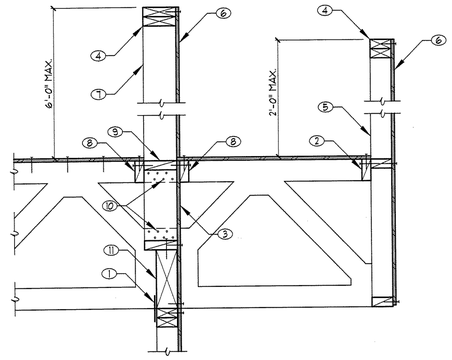

11. CANTILEVER BEAM PER PLAN. TRUSS MFR. TO DESIGN TRUSS w/ POCKET TO ACCOMMODATE BEAM

1. CLIP BEAM TO TOP PLATE w/ LTP4 AT 24" o.c.
2. SOLID 2x BLOCKING w/ (3) 16d PER BLOCK
3. SHEAR PANEL BLOCKING PER G.S.N.
4. DOUBLE TOP PLATE
5. TRUSS MFR. TO DESIGN TRUSS w/ PARAPET
6. SHEATHE PARAPET w/ 3/8" PLYWOOD w/ 8d AT 6" o.c. EDGES AND 12" o.c. FIELD
7. 2x6 STUDS EACH SIDE OF TRUSS. CONTINUE STUD TO BOTTOM OF TRUSS
8. 2x4 BLOCKING w/ (3) 16d EACH BLOCK
9. 2x BLOCKING BETWEEN STUDS
10. FASTEN PARAPET STUDS TO TRUSS w/ (6) 16d AT TOP AND BOTTOM

213 CANTILEVER TRUSS AT STUD WALL

213-070571 NO SCALE

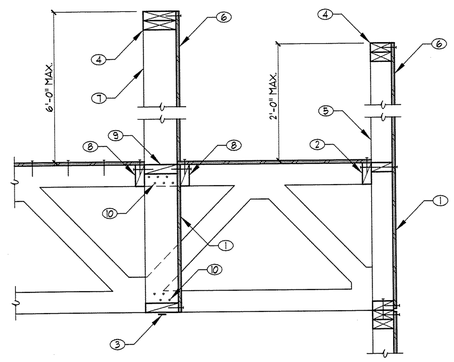

1. SHEAR PANEL BLOCKING PER G.S.N.
2. SOLID 2x BLOCKING w/ (3) 16d PER BLOCK
3. CONT. CS16 w/ (2) 8d AT 4 1/8" o.c. LAP TOP PLATE BEYOND 16" MIN. w/ (15) 8d
4. DOUBLE TOP PLATE
5. TRUSS MFR. TO DESIGN TRUSS w/ PARAPET
6. SHEATHE PARAPET w/ 3/8" PLYWOOD w/ 8d AT 6" o.c. EDGES AND 12" o.c. FIELD
7. 2x6 STUDS EACH SIDE OF TRUSS. CONTINUE STUD TO BOTTOM OF TRUSS
8. 2x4 BLOCKING w/ (3) 16d EACH BLOCK
9. 2x BLOCKING BETWEEN STUDS
10. FASTEN PARAPET STUDS TO TRUSS w/ (6) 16d AT TOP AND (4) 16d AT BOTTOM

214 WOOD TRUSS AT STUD WALL

214-070571 NO SCALE

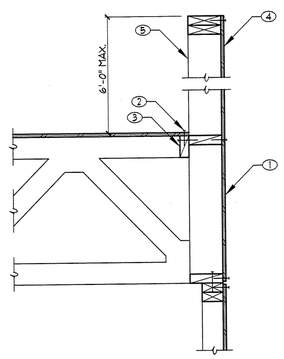

1. SHEAR PANEL BLOCKING BETWEEN TRUSSES PER G.S.N.
2. BOUNDARY FASTENERS
3. 2x BLOCK w/ (3) 16d TO TOP OF SHEAR PANEL BLOCKING
4. SHEATHE WALL w/ 3/8" PLYWOOD w/ 8d AT 6" o.c. EDGES AND 12" o.c. FIELD
5. TRUSS MFR. TO DESIGN TRUSS w/ PARAPET

215 WOOD TRUSS AT STUD WALL

215-070571 NO SCALE

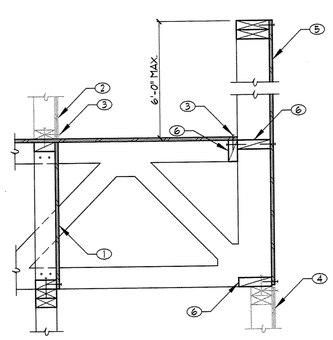

1. SHEAR PANEL BLOCKING BETWEEN TRUSSES PER G.S.N.
2. WALL ABOVE AS OCCURS
3. BOUNDARY FASTENERS
4. WALL BELOW AS OCCURS
5. SHEATHE WALL w/ 3/8" PLYWOOD w/ 8d AT 6" o.c. EDGES AND 12" o.c. FIELD
6. 2x SOLID BLOCKING BETWEEN TRUSSES

216 CANTILEVER TRUSS AT STUD WALL

216-070571 NO SCALE

THIS DRAWING IS AN INSTRUMENT OF SERVICE BETWEEN THE ARCHITECT AND HIS CLIENT, BUT REMAINS THE PROPERTY OF THE ARCHITECT.
© ALL RIGHTS RESERVED 2007

planning/interior design
AIA ARCHITECTS, PC
(702)876-0668
professional corp / certified n.c.a.r.b.

architecture/engineering/site
GARY GUY WILSON
7625 Dean Martin Drive, Suite#100
Las Vegas, Nevada 89139

CONSULTANTS:
CIVIL: CIVILWORKS, INC.
STRUCTL: WRIGHT ENGINEERS
ELEC: SH NEVADA
MECH: SH NEVADA

CARL'S JR RESTAURANT
@ RUSSELL ROAD & EASTERN AVE.
McCARRAN MARKETPLACE
FOR: S.L. INVESTMENTS, MR. STEVE LARSON
CLARK COUNTY, NEVADA

PROJ.NO.	070571
PROJ.ARCH.	
PROJ.MGR.	BDU
JOB CAPT.	SCG
TECH'N	
ARCH.CHK	
PH-2/3	
PH-4	
PH-5	

REVISIONS

PRINTS REQUIRE ARCHITECT'S SEAL & SIGN. FOR PROOF OF VALIDITY

07-19993
Clark County Dev. Services
Building Services Division
AUG 06 2007 DL
Reviewed and Accepted
Wilidan

STATE OF NEVADA
STEVEN C. GOULD
ENG-9247
CIVIL STRUCTURAL
No. 11173
PROFESSIONAL ENGINEER
APR 18 2007

WRIGHT one source
7425 PEAK DRIVE LAS VEGAS, NEVADA 89128
p 702.933.7000 f 702.933.7001 800.933.7611
WRIGHTENGINEERS.COM
LAS VEGAS :: IRVINE :: PHOENIX :: SALT LAKE

S42-070571-D

FRAMING DETAILS

SHT.NO. S4.2

K:\2007\070571\DWG\Structural\S42-070571-D.dwg, 4/18/2007 10:37:56 AM, KP

PLUMBING LEGEND

SYMBOL	ABBREVIATION	DESCRIPTION
	CW	COLD WATER
	HW	HOT WATER (140°)
TW	TW	TEMPERED WATER (120°)
	HWR	HOT WATER RETURN
	V	VENT
SS	SS	SANITARY WASTE ABOVE SLAB
	SS	SANITARY WASTE BELOW SLAB
SD	SD	STORM DRAIN
OSD	OSD	OVERFLOW STORM DRAIN
CD	CD	CONDENSATE DRAIN
G	G	NATURAL GAS
MPG	MPG	MEDIUM PRESSURE NATURAL GAS 5 P.S.I.
GW	GW	GREASE WASTE
	POC	POINT OF CONNECTION
	POD	POINT OF DEMOLITION
P 1	P-1	EQUIPMENT CALLOUT
		ITEM REFERENCED TO SHEET "K-2"
		SEE PLUMBING EQUIP. SCHEDULE THIS SHEET & EQUIPMENT SCHEDULE ON SHEET "K-1"
	WHA	WATER HAMMER ARRESTOR - A (DENOTES PDI SIZE)
	RPBD	REDUCED PRESSURE BACKFLOW DEVICE
	BV	BALL VALVE
	GC	GASCOCK VALVE
	SV	SOLENOID VALVE SHUT OFF
	GV	GATE VALVE
	GLV	GLOBE VALVE
	BAL	BALANCING VALVE
	PRV	PRESSURE REDUCING VALVE
	CHV	CHECK VALVE
		RELIEF VALVE
	RD	ROOF DRAIN
	ORD	OVERFLOW ROOF DRAIN
	FD	FLOOR DRAIN
	FS	FLOOR SINK
F		FIRE RISER
F		FIRE DEPARTMENT CONNECTION PIPE TURNED DOWN
	HB	HOSE BIBB PIPE TURNED UP
	VTR	VENT THRU ROOF TEE TURNED DOWN
		TEE TURNED UP
		UNION
		FLANGE
		CAP/HOSE END
		CONCENTRIC REDUCER
		ECCENTRIC REDUCER
		VALVE IN RISER
		ANCHOR
		GUIDE OR SLEEVE
		FLEXIBLE CONNECTOR
	FCO	FLOOR CLEANOUT
	FCO	2 WAY FLOOR CLEANOUT
	WCO	WALL CLEANOUT

ABBREVIATIONS

AFF	ABOVE FINISHED FLOOR	GAL	GALLONS
AFG	ABOVE FINISHED GRADE	GPM	GALLONS PER MINUTE
B/G	BELOW GRADE	KEC	KITCHEN EQUIPMENT CONTRACTOR
B/S	BELOW SLAB	P.S.I.	POUNDS PER SQUARE INCH
(E)	EXISTING	MBH	1,000 BRITISH THERMAL UNITS PER H.R
F.U.	FIXTURE UNIT	F.P.S.	FEET PER SECOND
PD	PUMPED DISCHARGE		

PLUMBING SPECIFICATIONS

PART I - GENERAL

1.1 CODES AND PERMITS:

A. THE WORK SHALL BE PERFORMED IN STRICT ACCORDANCE WITH THE APPLICABLE PROVISIONS OF THE INTERNATIONAL BUILDING CODE 2000 EDITION, THE UNIFORM PLUMBING CODE 2000 EDITION, THE UNIFORM MECH. CODE 2000 EDITION, AS ADOPTED & INTERPRETED BY THE CLARK COUNTY BUILDING DEPARTMENT AND NATIONAL FIRE PROTECTION ASSOCIATION (NFPA REGULATIONS), CURRENT ADOPTED EDITIONS, REGARDING FIRE PROTECTION, HEATING AND VENTILATING AND AIR CONDITIONING SYSTEMS AND ELECTRICAL SYSTEMS. ALL MATERIALS AND LABOR NECESSARY TO COMPLY WITH RULES, REGULATIONS AND ORDINANCES SHALL BE PROVIDED. WHERE THE DRAWINGS AND/OR SPECIFICATIONS INDICATE MATERIALS OR CONSTRUCTION IN EXCESS OF CODE REQUIREMENTS, THE DRAWINGS AND/OR SPECIFICATIONS SHALL GOVERN. THE CONTRACTOR SHALL HOLD AND SAVE THE ENGINEER FREE AND HARMLESS FROM LIABILITY OF ANY NATURE OR KIND ARISING FROM HIS FAILURE TO COMPLY WITH CODES AND ORDINANCES.

B. ALL PERMITS AND FEES NECESSARY FOR PERFORMANCE OF THE WORK SHALL BE SECURED AND PAID FOR BY THE CONTRACTOR.

1.2 OPERATION AND MAINTENANCE INSTRUCTIONS:

A. THE CONTRACTOR SHALL FURNISH THE OWNER COMPLETE OPERATING AND MAINTENANCE INSTRUCTIONS COVERING ALL UNITS OF PLUMBING EQUIPMENT HEREIN SPECIFIED TOGETHER WITH PARTS LISTS. FURNISH TWO (2) COPIES OF ALL THE LITERATURE - EACH SHALL BE SUITABLY BOUND IN LOOSE LEAF BOOK FORM.

1.3 RECORD DRAWINGS:

A. CONTRACTOR SHALL TURN OVER TO OWNER (1) SET OF "AS-BUILT" PLANS AT PROJECT COMPLETION. THIS SET SHALL INCLUDE ALL DEVIATIONS FROM ORIGINAL DESIGN.

1.4 QUALIFICATIONS:

A. ALL MECHANICS SHALL BE SKILLED IN THEIR RESPECTIVE TRADES.

1.5 SUBMITTALS:

A. THE CONTRACTOR SHALL SUBMIT SEVEN (7) COPIES OF SUBMITTAL BROCHURES FOR REVIEW, SIX (6) COPIES (MAX) WILL BE RETURNED WITH APPROVAL NOTATIONS. BROCHURES SHALL BE SUBMITTED WITHIN THIRTY (30) DAYS AFTER CONTRACT AWARD.

B. COMPLETE DATA MUST BE FURNISHED SHOWING PERFORMANCE, QUALITY AND DIMENSIONS. NO EQUIPMENT OR MATERIALS SHALL BE PURCHASED PRIOR TO RECEIVING WRITTEN NOTIFICATION FROM THE ARCHITECT/ENGINEER THAT SUBMITTALS HAVE BEEN REVIEWED AND MARKED EITHER "NO EXCEPTIONS TAKEN" OR "MAKE CORRECTIONS AS NOTED". SUBMITTALS RETURNED MARKED "MAKE CORRECTIONS AS NOTED" DO NOT REQUIRE RESUBMITTAL PROVIDED THAT THE CONTRACTOR AGREES TO COMPLY WITH ALL EXCEPTIONS NOTED IN THE SUBMITTAL, AND SO STATES IN A LETTER TO THE ARCHITECT/ENGINEER.

C. REVIEW AND APPROVAL OF SUBMITTALS: SUBMITTALS WILL BE REVIEWED WITH REASONABLE PROMPTNESS, BUT ONLY FOR CONFORMANCE WITH THE DESIGN CONCEPT OF THE PROJECT AND WITH THE INFORMATION INDICATED ON THE DRAWINGS AND STATED IN THE SPECIFICATIONS. APPROVAL OF A SEPARATE ITEM AS SUCH WILL NOT INDICATE APPROVAL OF THE ASSEMBLY IN WHICH THE ITEM FUNCTIONS. APPROVAL OF SUBMITTALS SHALL NOT RELIEVE THE CONTRACTOR OF RESPONSIBILITY FOR ANY DEVIATION FROM THE REQUIREMENTS OF THE CONTRACT DOCUMENTS, NOR SHALL APPROVAL RELIEVE THE CONTRACTOR OF RESPONSIBILITY FOR THE EQUIPMENT FITTING WITHIN THE ALLOTTED SPACE SHOWN ON THE DRAWINGS WITH ALL CLEARANCES REQUIRED FOR EQUIPMENT OPERATION, SERVICE AND MAINTENANCE INCLUDING A MINIMUM OF 3 FEET CLEAR IN FRONT OF ALL ELECTRICAL CONTROL EQUIPMENT AND PANELS, FOR ERRORS OR OMISSIONS IN THE SUBMITTALS; OR FOR THE ACCURACY OF DIMENSIONS AND QUANTITIES, THE ADEQUACY OF CONNECTIONS, AND THE PROPER AND ACCEPTABLE FITTING, EXECUTION, FUNCTIONING AND COMPLETION OF THE WORK.

D. USE OF APPROVED SUBSTITUTIONS DOES NOT RELIEVE THE CONTRACTOR FROM COMPLIANCE WITH THE CONTRACT DOCUMENTS. CONTRACTOR SHALL BEAR ALL EXTRA EXPENSE RESULTING FROM APPROVED SUBSTITUTIONS WHERE SUBSTITUTIONS AFFECT ADJOINING OR RELATED WORK REQUIRED IN THIS DIVISION OR OTHER DIVISIONS OF THIS SPECIFICATION.

E. IF CONTRACTOR SUBSTITUTES EQUIPMENT FOR THAT DRAWN TO SCALE ON THE DRAWINGS, HE SHALL PREPARE A 1/4" = 1'-0" FABRICATION DRAWING FOR EACH EQUIPMENT ROOM WHERE A SUBSTITUTION IS MADE, USING DIMENSIONS OF SUBSTITUTED EQUIPMENT, TO VERIFY THAT EQUIPMENT WILL FIT SPACE WITH ADEQUATE CLEARANCES FOR MAINTENANCE. THIS 1/4" = 1'-0" FABRICATION DRAWING SHALL BE SUBMITTED AND APPROVED BY THE ARCHITECT/ENGINEER BEFORE CONSTRUCTION BEGINS.

F. UNAUTHORIZED SUBSTITUTIONS: IF SUBSTITUTE MATERIALS, EQUIPMENT OR SYSTEMS ARE INSTALLED WITHOUT PRIOR APPROVAL OR ARE INSTALLED IN A MANNER WHICH IS NOT IN CONFORMANCE WITH THE REQUIREMENT OF THIS SPECIFICATION AND FOR WHICH THE CONTRACTOR HAS NOT RECEIVED WRITTEN APPROVAL, REMOVAL OF ALL THE UNAUTHORIZED MATERIALS AND INSTALLATION OF THOSE INDICATED OR SPECIFIED SHALL BE PROVIDED AT NO EXTRA COST TO THE OWNER.

1.6 FIELD MEASUREMENTS:

A. THE CONTRACTOR SHALL VERIFY ALL DIMENSIONS AND CONDITIONS GOVERNING HIS WORK FOR THIS PROJECT. NO EXTRA COMPENSATION SHALL BE CLAIMED OR ALLOWED ON ACCOUNT OF DIFFERENCES BETWEEN ACTUAL DIMENSIONS, INCLUDING DIMENSIONS OF EQUIPMENT, FIXTURES AND MATERIALS FURNISHED, AND THOSE INDICATED ON THE DRAWINGS. CONTRACTOR SHALL EXAMINE ADJOINING WORK, ON WHICH HIS WORK IS DEPENDENT FOR PERFECT EFFICIENCY, AND SHALL REPORT ANY WORK WHICH MUST BE CORRECTED. COORDINATION OF ALL PLUMBING WORK WITHIN THE BUILDING WILL BE THE DIRECT RESPONSIBILITY OF THE CONTRACTOR. REVIEW OF SUBMITTAL DATA IN ACCORDANCE WITH PARAGRAPH "SUBMITTALS" SHALL IN NO MANNER RELIEVE THE CONTRACTOR OF RESPONSIBILITY FOR THE PROPER INSTALLATION OF THE PLUMBING WORK WITHIN THE AVAILABLE SPACE. NO WAIVER OF RESPONSIBILITY FOR DEFECTIVE WORK SHALL BE CLAIMED OR ALLOWED DUE TO FAILURE TO REPORT UNFAVORABLE CONDITIONS AFFECTING HIS WORK. INSTALLATION OF EQUIPMENT AND SYSTEMS WITHIN THE BUILDING SPACE SHALL BE CAREFULLY COORDINATED BY THE CONTRACTOR WITH ALL BUILDING TRADES.

1.7 EQUIPMENT SUPPORT:

A. CONTRACTOR SHALL PROVIDE SUPPORT FOR EQUIPMENT TO THE BUILDING STRUCTURE. CONTRACTOR SHALL FURNISH ALL NECESSARY STRUCTURES, INSERTS, SLEEVES, AND HANGING DEVICES FOR INSTALLATION OF PLUMBING EQUIPMENT, PIPING, ETC. CONTRACTOR SHALL COMPLETELY COORDINATE INSTALLATION OF SUCH DEVICES WITH ALL TRADES AND SUB-CONTRACTORS. CONTRACTOR MUST FURTHER VERIFY WITH THE ARCHITECT THAT THE DEVICES AND SUPPORTS ARE ADEQUATE AS INTENDED AND DO NOT OVERLOAD THE BUILDING'S STRUCTURAL COMPONENTS IN ANY WAY.

PART 2 - MATERIALS AND PRODUCTS

A. WATER PIPING

1. ALL PIPING SHALL CONFORM TO THE REQUIREMENTS OF THE ANSI SAFETY CODE AND BE FREE FROM ALL DEFECTS AND BE PROPERLY IDENTIFIED.
2. ABOVE GROUND: SHALL BE TYPE "L" HARD DRAWN COPPER TUBING CONFORMING TO ASTM B 88-93A.
3. BELOW GROUND: SHALL BE TYPE "K" SOFT DRAWN COPPER TUBING CONFORMING TO ASTM B 88-93A. PIPING BELOW SLABS SHALL BE SLEEVED IN POLYETHYLENE PROTECTIVE SLEEVING. INSTALL NO PIPING JOINTS BELOW FLOOR.
4. SOLDER FILLER METAL SHALL BE PER A.S.T.M. B32, 95-5 TIN-ANTIMONY. SOLDERS AND FLUXES WITH A LEAD CONTENT GREATER THAN TWO-TENTHS (0.20) OF ONE (1) PERCENT ARE STRICTLY PROHIBITED.

B. CONDENSATE DRAIN PIPING

1. TYPE "M" HARD DRAW COPPER TUBING PER ASTM 88-93A

C. PIPE INSULATION

1. HOT AND HOT WATER RETURN PIPING ABOVE GROUND SHALL BE INSULATED WITH 1" THICK PREFORMED FIBERGLASS PIPE INSULATION WITH ALL SERVICE JACKET. WHERE CLEARANCE AND LIMITATION PREVENT THE USE OF FIBERGLASS INSULATION, 1/2" THICK CLOSED CELL NEOPRENE PIPE INSULATION MAY BE USED. ALL COLD WATER PIPING IN THE ATTI SPACE SHALL BE INSULATED WITH 0.5" THICK INSULATION FOR FREEZE PROTECTION.

D. WASTE, VENT AND STORM WATER PIPING

1. USE SCHEDULE 40 PVC PIPING AND FITTINGS PER 2000 UPC CHAPTERS 7 AND 9 AND APPENDIX I INSTALLATION STANDARDS.

E. PLUMBING FIXTURES

1. PROVIDE CP ANGLE STOPS TO EACH PLUMBING FIXTURE. PROVIDE SHUT-OFF VALVES WITH UNIONS FOR WATER HEATER TO FACILITATE ISOLATION FOR REPAIR. ALL PLUMBING FIXTURES SHALL COMPLY WITH WATER CONSERVATION CODE OF AUTHORITY HAVING JURISDICTION.

PART 3 - VALVES

1. SIZE OF SHUT-OFF VALVES, BALANCING COCKS, UNIONS ETC., SHALL BE FULL LINE SIZE.

PART 4 - PIPE HANGERS

1. SUPPORT PIPING 3/4" AND LESS AT 6'-0" O/C, 1-1/4" AND SMALLER 8'-0" O/C, AND PIPING 1-1/2" AND LARGER 10'-0" O/C. WASTE PIPING SHALL BE SUPPORTED AT 5'-0" O/C. PROVIDE 3/8" DIA. THREADED ROD FOR PIPE HANGERS.

PART 5 - CLEANOUTS

1. CLEANOUTS SHALL BE INSTALLED AS SHOWN AND AS REQUIRED BY CODE.

PART 6 - PIPE INSTALLATION

1. INSTALL PIPING TO BEST SUIT FIELD CONDITIONS, COORDINATE LAYOUT OF PIPING WITH DUCT WORK AND OFFSET PIPING AS REQUIRED TO CLEAR NEW DUCTWORK.

PART 7 - EXISTING CONDITIONS

1. THE CONTRACTOR SHALL VERIFY EXACT LOCATIONS OF ALL UTILITIES PRIOR TO COMMENCING WORK. THE CONTRACTOR SHALL VISIT THE SITE AND INSPECT THE WORK HE MUST PERFORM, IN ADDITION TO WHAT IS SHOWN HERE-IN, AND INCLUDE IN HIS BID AN AMOUNT TO DO SUCH WORK.

PART 8 - UNIONS

1. PROVIDE A UNION BETWEEN CONNECTIONS TO EACH FIXTURE, DEVICE OR PIECE OF EQUIPMENT FOR DISCONNECTING OF PIPING.

PART 9 - STERILIZATION

1. STERILIZE THE ENTIRE WATER DISTRIBUTION SYSTEM PER THE REQUIREMENTS OF THE LOCAL AUTHORITY HAVING JURISDICTION.
2. AT A MINIMUM, CLEAN THOROUGHLY WITH A SOLUTION CONTAINING NOT LESS THAN 50 PARTS PER MILLION OF AVAILABLE CHLORINE. FOR CHLORINATING MATERIALS, USE SODIUM HYPOCHLORITE SOLUTION CONFORMING TO FEDERAL SPEC. O-S-441, GRADE D, AND INTRODUCE INTO THE SYSTEM BY USE OF A COCK AT A SLOW, EVEN, CONTINUOUS RATE. ALLOW THE STERILIZING SOLUTION TO REMAIN IN THE SYSTEM FOR A PERIOD OF 8 HOURS, DURING WHICH TIME ALL VALVES AND FAUCETS SHALL BE OPENED AND CLOSED SEVERAL TIMES. AFTER STERILIZATION, FLUSH THE SOLUTION FROM THE SYSTEM WITH CLEAN WATER UNTIL THE RESIDUAL CHLORINE CONTENT IS NOT GREATER THAN 0.2 PARTS PER MILLION. PLATE COUNT SHALL INDICATE COUNT LESS THAN 100 BACTERIA PER CC.

PART 10 - TESTING

1. FILL DOMESTIC WATER SYSTEM WITH WATER AND PRESSURIZE TO 125 PSI AND MAINTAIN FOR FOUR (4) HOURS WITH NO PRESSURE DROP.
2. FILL DRAIN, WASTE AND VENT SYSTEM WITH WATER TO HIGHEST POINT OF THE SYSTEM. HOLD PRESSURE FOR FOUR (4) HOURS WITH NO DROP IN WATER LEVEL.
3. TEST AND OBTAIN APPROVAL ON ALL UNDERGROUND PIPING FROM ADMINISTRATIVE AUTHORITY HAVING JURISDICTION PRIOR TO COVERING WORK. PROVIDE WRITTEN TESTING REPORT TO ARCHITECT.

PART 11 - CLEANING

1. AT THE COMPLETION OF THE WORK AND PRIOR TO FINAL ACCEPTANCE, ALL PARTS OF THE WORK INSTALLED UNDER THIS SPECIFICATION SHALL BE THOROUGHLY CLEANED. ALL EQUIPMENT, FIXTURES, PIPE, VALVES AND FITTINGS SHALL BE CLEANED OF GREASE, METAL CUTTINGS AND SLUDGE WHICH MAY HAVE ACCUMULATED BY OPERATION OF THE SYSTEM FOR TESTING HERE-IN BEFORE SPECIFIED OR FROM OTHER CAUSES.

PART 12 - GUARANTEE

1. THE CONTRACTOR SHALL GUARANTEE ALL MATERIALS, EQUIPMENT AND WORKMANSHIP FROM DEFECT OF MATERIAL AND WORKMANSHIP FOR A PERIOD OF ONE YEAR FROM ACCEPTANCE WITHOUT ADDITIONAL COST TO THE OWNER.

FIRE PROTECTION SPECIFICATIONS

1. SPRINKLER CONTRACTOR SHALL PROVIDE SYSTEM DESIGN, LABOR, MATERIALS, EQUIPMENT AND SERVICES NECESSARY FOR THE COMPLETE FIRE SPRINKLER SYSTEM.
2. THE DESIGN AND INSTALLATION SHALL CONFORM TO ALL REQUIREMENTS OF THE NATIONAL FIRE PROTECTION ASSOCIATION (NFPA 13) AND THE GENERAL REQUIREMENTS OF APPLICABLE SECTIONS OF THE UNIFORM BUILDING CODE, THE SPECIFIC REQUIREMENTS OF THE LOCAL FIRE PREVENTION BUREAU, AND THE OWNER'S INSURANCE UNDERWRITER.
3. THE SYSTEM SHALL INCLUDE, BUT IS NOT LIMITED TO, SPRINKLER HEADS, VALVES, ESCUTCHEONS, PIPING, FITTINGS, HANGERS, DRAINS, WET TEST CONNECTIONS, SIGNS AND OTHER IDENTIFICATION MARKINGS AS REQUIRED.
4. ALL MATERIALS AND EQUIPMENT USED IN THE INSTALLATION OF FIRE PROTECTION SYSTEMS SHALL BE LISTED AS APPROVED BY UNDERWRITERS LABORATORIES, INC., "LIST OF INSPECTED FIRE PROTECTION EQUIPMENT AND MATERIALS," OR APPROVED BY OTHER APPROPRIATE, NATIONALLY RECOGNIZED TESTING LABORATORIES FOR USE IN SPRINKLER SYSTEMS, AND SHALL BE THE LATEST DESIGN OF THE MANUFACTURER.
5. SPRINKLER HEADS SHALL BE PROVIDED AS REQUIRED AND CONFORM TO THE LATEST EDITION OF NFPA 13.
6. PIPING, PIPE HANGERS AND SUPPORTS SHALL CONFORM TO THE LATEST EDITION OF NFPA 13.
7. INSTALL HEADS AT FINISHED HEIGHT WITH ESCUTCHEON, OR DIRECTLY IN REDUCER OF EXTRA LENGTH DROPS RATHER THAN PLUGGING. IF EXTRA LENGTH DROPS ARE INSTALLED, CUT BACK HEADS AFTER CEILING INSTALLATION IN THE CUSTOMARY MANNER.
8. SPRINKLER DROPS ARE TO BE INSTALLED PRIOR TO INSTALLATION OF CEILING SYSTEM THEN REMOVED AND REINSTALLED AFTER INSTALLATION OF CEILING SYSTEM, WITH DROPS MODIFIED, AS REQUIRED. PROVIDE ESCUTCHEONS AT EACH SPRINKLER HEAD.
9. COORDINATE WITH OTHER WORK, INCLUDING DUCTWORK, DIFFUSERS, GRILLES, ELECTRICAL AND PLUMBING PIPING, AS NECESSARY TO INTERFACE COMPONENTS OF FIRE SPRINKLER PIPING PROPERLY WITH OTHER WORK.
10. AFTER SYSTEM IS COMPLETELY INSTALLED, IT SHALL BE FILLED AND TESTED IN ACCORDANCE WITH LOCAL REQUIREMENTS, AND THE REQUIREMENTS OF THE APPLICABLE NFPA BULLETINS.
11. FINAL SHOP DRAWINGS SHALL FIRST BE SUBMITTED TO THE STATE FIRE MARSHAL. FOLLOWING THEIR REVIEW AND APPROVAL, SUBMIT TO THE OWNER'S INSURANCE COMPANY. FOLLOWING THEIR SIGNATURED APPROVAL, THE SHOP DRAWINGS SHALL BE SENT TO THE PRIME CONSULTANT'S OFFICE FOR REVIEW. IF REQUIRED BY ANY REVIEWING AGENT, OR IF REVIEW COMMENTS REQUIRE EXTENSIVE REVISIONS, THE SUBMITTAL SHALL BE REVISED AS REQUIRED AND RESUBMITTED FOR APPROVAL BEFORE SUBMISSION TO THE PRIME CONSULTANT'S OFFICE.
12. THE CONTRACTOR GUARANTEES THAT ALL WORK INSTALLED SHALL BE FREE OF ALL DEFECTS IN WORKMANSHIP AND MATERIAL FOR A PERIOD OF ONE YEAR FROM THE DATE OF THE CERTIFICATION OF COMPLETION AND ACCEPTANCE OF THE WORK.

GENERAL NOTES

1. VERIFY ALL COPPER PIPING IS GRADED AS PER SPECIFICATIONS, AND INSTALLED AS CALLED FOR IN DRAWINGS AND SPECIFICATIONS.
2. PROVIDE WALL PLATES, STOPS, SUPPLIES, TRAPS AND DRAIN OUTLETS FOR ALL KITCHEN AND MISCELLANEOUS EQUIPMENT.
3. REFER TO DRAWINGS FOR EXACT LOCATION OF ALL FLOOR SINKS, FLOOR DRAINS. KITCHEN AND OTHER STUB - OUTS. FLOOR SINKS SHALL BE HALF-EXPOSED UNLESS ALTERNATE LOCATION IS APPROVED BY LOCAL ENVIRONMENTAL HEALTH DEPT.
4. INDIRECT WASTE LINES FROM ICE BINS ARE TO BE INSULATED.
5. RUN INDIRECT WASTE FROM UNDER COUNTER BLOWER COIL, ICE BINS, FREEZER AND COOLER. ALL DRAINS SHALL BE TYPE "M" COPPER AND INSULATED.
6. HOOKUPS OR TIE-INS, COULD PROJECT BEYOND THE LIMITS OF CONSTRUCTION, IF SO, IT IS THE PLUMBING CONTRACTOR'S RESPONSIBILITY TO DO SO. SEE SHEET "P-1" OR SITE PLAN SHEET "A-1".
7. CONDENSATE DRAINS FROM AC UNITS SHALL TERMINATE IN FLOOR SINKS. PIPING SHALL BE TYPE "M" COPPER, AND SUPPORTED BELOW THE ROOF AS REQUIRED BY CODE.
8. CONNECT ALL EQUIPMENT AND FIXTURES SUPPLIED BY OTHERS. SEE SHEET "P-3.1"
9. ALL HOT WATER PIPING SHALL BE FIBERGLASS INSULATED (R=4.0 MIN. RATING) PER SPECIFICATIONS.
10. ALL VENT PIPES AND OTHER LINES SHALL NOT PENETRATE BEAMS OVER SHEAR PANELS. ALL LINES SHALL BREAK AROUND BEAMS INTO FURRED AREAS.
11. PROVIDE NAIL GUARDS AS REQUIRED.
12. NO VENT PIPE SHALL TERMINATE CLOSER THAN 10' FROM ANY AIR INTAKE.
13. CLEAN OUT TO GRADE SHALL BE PROVIDED EVERY 50 FT. OF RUN, OR AT CHANGE OF DIRECTION. ALL CLEAN OUTS SHALL BE BROUGHT TO GRADE AND INSTALLED IN A 18"X18" CONCRETE PAD WITH TRAFFIC COVER.
14. PROVIDE ANY BACK FLOW PREVENTION DEVICE REQUIRED BY CODE OR GOVERNING AUTHORITIES. CONTRACTOR SHALL VERIFY THIS WITH CITY OR LOCAL AGENCIES AND INCLUDE COST OF SAME IN BID. CONTRACTOR TO HAVE BACK FLOWS CERTIFIED.
15. SEE NOTES AND DETAILS FOR ALL FLOOR SINKS AND DRAINS ON SHEET "P-3.1".
16. DO NOT CUT OR NOTCH STRUCTURAL MEMBERS. NO PIPE LARGER THAN 3/4" SHALL PENETRATE ANY STRUCTURAL BEAMS, TIE, OR DOUBLE PLATE. NOTCHING AT SILLS REQUIRE ADDITIONAL BOLTS. SEE STRUCTURAL DRAWINGS, AND ADDED STEEL STRAPS. PROVIDE STRAPS AS INDICATED ON STRUCTURAL DRAWINGS
17. RUN PIPES IN CONCEALED AREAS.
18. PAY FOR ALL WATER, SEWER AND GAS CONNECTION FEES.
19. ALL GAS PIPING AND FITTINGS SHALL BE SCHED. 40 BLACK STEEL, AND WHERE EXPOSED ON THE ROOF SHALL BE COATED. SEE SPECIFICATIONS.
20. SEE SHEET "P-3.1", FOR LOCATIONS OF INDIRECT WASTE LINES FOR ALL EQUIPMENT.
21. PIPING DENOTED TO RUN ABOVE CEILING, SHALL RUN IN TRUSS JOIST SPACE. ALL PIPE HANGERS SHALL BE PER SPECIFICATIONS AND SUSPEND FROM TOP CHORD OF TRUSS.
22. WHERE INDIRECT WASTE LINE FROM FREEZER AND COOLER PENETRATES FREEZER AND COOLER WALLS, CONTRACTOR SHALL CAULK SOLIDLY AROUND PENETRATION. AFTER CAULKING, USE SPLIT RING ESCUTCHEON (CHROME).
23. GAS CUTOFF VALVES FURNISHED BY FIRE PROTECTION EQUIPMENT CO. INSTALLED BY PLUMBING CONTRACTOR ABOVE CEILING.
24. ALL WATER PIPING ON THE ROOF SHALL BE INSULATED PER SPECIFICATIONS.
25. PROVIDE WATER HAMMER ARRESTORS AS INDICATED ON THE DRAWINGS. AIR CHAMBERS NOT AN APPROVED SUBSTITUTE.
26. SQUARE FLOOR DRAINS MUST ALIGN PARALLEL WITH MORTAR JOINTS OF TILE FLOOR.
27. WHEN OUTLET END OF ROOF DRAIN INTERFERES W/HANDICAP RAMP, ANGLE PIPE TO MISS THE RAMP. (SEE SHEET "A-1" FOR EXACT LOCATION OF RAMP).
28. FURNISH AND INSTALL ALL P.V.C. (SCHEDULE 40 POLYVINYL CHLORIDE) LINES FOR SYRUP LINES AND SHALL HAVE A MINIMUM 36" RADIUS. SEE SHEET "P-3.1" FOR ADDITIONAL INFORMATION AND EXACT LOCATIONS AND STUB UP HEIGHTS.
29. ALL VENTS THRU ROOF MUST TERMINATE IN THE EQUIPMENT WELL OF THE ROOF TO 4" ABOVE PARAPET. NO VENTS OR PIPES OF ANY KIND ARE PERMITTED THRU THE SLOPED MANSARD SECTION (WHERE OCCURS).
30. ALL WORK TO BE DONE IN ACCORDANCE WITH ALL LOCAL CODES AND REQUIREMENTS.
31. VERIFY EXACT SIZE, DEPTH, AND LOCATION OF ALL EXISTING UTILITIES PRIOR TO BID AND START OF WORK.
32. LAVATORY FAUCETS AND SINK FAUCETS (NOT INCLUDING SERVICE SINK FAUCET) SHALL MEET THE FLOW REQUIREMENTS OF THE LOCAL CODES AND STANDARDS.
33. WHERE REQUIRED, NONRESIDENTIAL ENERGY CONSERVATION STANDARDS SHALL BE REVIEWED AND THE DESIGN DRAWINGS COMPLY SUBSTANTIALLY WITH THESE STANDARDS.
34. PROVIDE TRAP PRIMERS AT ALL FLOOR DRAINS PER SPECIFICATIONS AND LOCAL REQUIREMENTS.
35. ALL EXPOSED PIPING FOR DESIGNATED DISABLED ACCESS FIXTURES SHALL BE COVERED OR OTHERWISE WRAPPED IN ACCORDANCE WITH A.D.A. REQUIREMENTS AND LOCAL AUTHORITY.
36. ALTERNATE MATERIALS NOT IDENTIFIED IN SPECIFICATIONS/DRAWINGS BUT APPROVED BY LOCAL AUTHORITY SHALL BE SUBMITTED TO ARCHITECT AND PLUMBING ENGINEER FOR REVIEW PRIOR TO INSTALLATION.
37. ISOMETRIC DIAGRAMS ARE FOR SIZING PURPOSES ONLY AND SHALL NOT BE USED FOR MATERIAL TAKE-OFFS, OR BE CONSTRUED TO INDICATE ACTUAL SITE INSTALLATION.

SHEET INDEX

SHEET NO.	DESCRIPTION	PERMIT SET - 4/18/07
P-0	PLUMBING LEGEND & SPECIFICATIONS	●
P-1	PLUMBING SITE PLAN	●
P-2	PLUMBING SCHEDULES AND DIAGRAMS	●
P-3	PLUMBING WASTE AND VENT PLAN, RISER DIAGRAM	●
P-3.1	PLUMBING EQUIPMENT ROUGH-IN PLAN	●
P-4	PLUMBING GAS AND WATER PLAN, RISER DIAGRAM	●

ENERGY CONSERVATION MEASURES

FOR SERVICE HEATING SYSTEMS PER 2003 IECC, SECTION 804

1. WATER HEATERS SHALL MEET THE PERFORMANCE CRITERIA PER TABLE 804.2 THERMAL EFFICIENCY EQUAL OR GREATER THAN 80%.
2. AUTOMATIC CIRCULATING HOT WATER SYSTEM PUMPS SHALL BE PROVIDED TO TURN OFF WHEN THE HOT WATER SYSTEM IS NOT IN OPERATION PER 804.6.
3. PROVIDE MINIMUM 1" PIPE INSULATION ON ALL HOT WATER SYSTEM, INCLUDING HOT WATER SUPPLY AND RETURN PIPING PER 804.5.
4. SHOWER HEADS SHALL HAVE A MINIMUM FLOW RATE OF 2.5 GPM @ 80 PSI WHEN TESTED IN ACCORDANCE WITH A.S.M.E. A112.18.1.

07-17993
Clark County Dev. Services
Building Services Division
AUG 06 2007 DL
Reviewed and Accepted
Willdan

THIS DRAWING IS AN INSTRUMENT OF SERVICE BETWEEN THE ARCHITECT AND HIS CLIENT, BUT REMAINS THE PROPERTY OF THE ARCHITECT.
© ALL RIGHTS RESERVED 2005

planning/interior design
AIA STUDIOS...
(702)876-0668
professional corp / certified n.c.a.r.b.
4175 South Riley Street
Suite 200
Las Vegas, NV 89147
Tel: 702.873.0670
Fax: 702.222.2058
www.aiaNevada.com

architecture/engineering/site
GARY GUY WILSON
7625 South Industrial Road, Suite#100
Las Vegas, Nevada 89139

MEP: SFI NEVADA

CONSULTANTS:
CIVIL: CIVILWORKS, INC.
STRUCTL: WRIGHT ENGINEERS

CARL'S JR RESTAURANT
@ RUSSELL ROAD & EASTERN AVE.
McCARRAN MARKETPLACE
FOR: S.L. INVESTMENTS, MR. STEVE LARSON
CLARK COUNTY, NEVADA

PROJ.NO.	13520701.00
PROJ.ARCH.	G.G.WILSON,AIA
PROJ.MGR.	MVM
JOB CAPT.	MVM
TECH'N	
ARCH.CHK.	GGW
PH-2/3	02FEB07
PH-4	30MAR07
PH-5	02MAY07

REVISIONS

PRINTS REQUIRE ARCHITECT'S SEAL & SIGN. FOR PROOF OF VALIDITY

PROFESSIONAL ENGINEER - STATE OF NEVADA
ALEXANDER JANKOVIC
Exp. 6/30/07
MECHANICAL
13957
4/18/07

PLUMBING LEGEND & SPECIFICATIONS

LV070018

SHT.NO. P0.0

P:\PROJ\LV070018\P-0_GENERAL.dwg, 4/18/2007 9:33:08 AM, jjoness

GENERAL NOTES

1. COORDINATE THE FINAL LOCATION OF GREASE INTERCEPTOR WITH ARCHITECTURAL AND CIVIL PLANS.

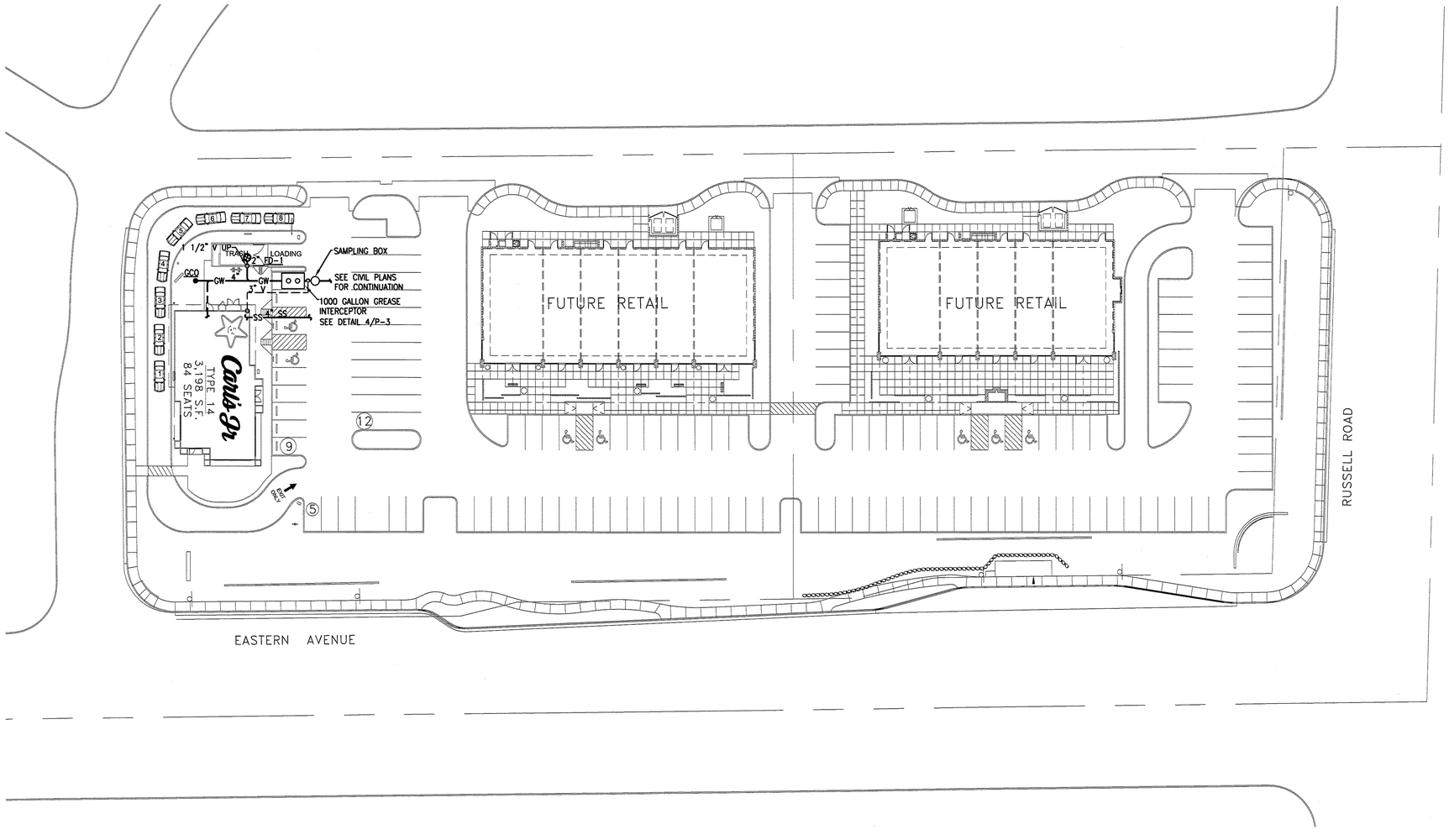

07-19993
Clark County Dev. Services
Building Services Division
AUG 06 2007 DL
Reviewed and Accepted
Wilidan

PLUMBING SITE PLAN SC: 1/32"= 1'-0" 1

THIS DRAWING IS AN INSTRUMENT OF SERVICE BETWEEN THE ARCHITECT AND HIS CLIENT, BUT REMAINS THE PROPERTY OF THE ARCHITECT.
© ALL RIGHTS RESERVED 2005

architecture/engineering/site
GARY GUY WILSON AIA
7625 South Industrial Road, Suite#100
Las Vegas, Nevada 89139
planning/interior design
STUDIOS...
(702)876-0668
professional corp / certified n.c.a.r.b.

MEP: SH NEVADA
4175 South Riley Street
Suite 200
Las Vegas, NV 89147
Tel: 702.873.0670
Fax: 702.873.1098
www.shnevada.com

CONSULTANTS:
CIVIL: CIVILWORKS, INC.
STRUCTL: WRIGHT ENGINEERS

CARL'S JR RESTAURANT
@ RUSSELL ROAD & EASTERN AVE.
McCARRAN MARKETPLACE
FOR: S.L. INVESTMENTS, MR. STEVE LARSON
CLARK COUNTY, NEVADA

PROJ.NO.	13520701.00
PROJ.ARCH.	G.G.WILSON,AIA
PROJ.MGR.	MVM
JOB CAPT.	MVM
TECH'N	.
ARCH.CHK.	GGW
PH-2/3	02FEB07
PH-4	30MAR07
PH-5	02MAY07

REVISIONS
1 ..
2
3
4
5
6

PRINTS REQUIRE ARCHITECT'S SEAL & SIGN. FOR PROOF OF VALIDITY

PROFESSIONAL ENGINEER - STATE OF NEVADA
ALEXANDER JANKOVICH
EXPIRES DEC. 31
MECHANICAL
No. 13957
4/18/07

LV070018

PLUMBING SITE PLAN

SHT.NO. P-1

P:\P83\LV070018\P\MGP-1_Site.dwg, 4/18/2007 9:33:33 AM, jlorenzo

UTILITY SCHEDULE

	F.U.	GPM	A/C MAKE-UPO	FIRE PRO	TOTAL GPM	METER	STREET PRESSURE	WATER HARDNESS
WATER	81	67.5	---	---	67.5	1 1/2"	- - -	

	F.U.	BUILDING SEWER	STREET SEWER	
SEWER	67	4"	8"	

	SPACE HEATING	WATER HEATING	KITCHEN	TOTAL
GAS (C.F.H)	420	75.5	584	1,079.5

SEE DETAIL 7/P-4 FOR GAS LOAD

MIXING VALVE SCHEDULE

MARK	GPM	PRESSURE DROP (PSI)	INLET SIZES	OUTLET SIZE	MANUFACTURER & MODEL NO.
MX 1	.5	5	3/8"	3/8"	SYMMONS 5-110
MX 2	1	5	1/2"	1/2'	SYMMONS 5-120

CIRCULATING PUMP SCHEDULE

MARK	GPM	HEAD (FT. WC)	ELECTRICAL VOLTAGE	PHASE	HP	MANUFACTURER/ MODEL NUMBER OR EQUAL
CP-1	2.0	15	120	1	1/25	BELL & GOSSET, # LR-15B POTABLE WATER APPLICATION ALL BRASS MATERIAL

WATER CALCULATIONS

DEVELOPED LENGTH TO FARTHEST WATER FIXTURE:	D.L. = 250 FT.
EQUIVALENT LENGTH OF RUN:	E.L.R. = 1.2 X 250 = 300 FT.
MINIMUM AVAILABLE PRESSURE:	60 PSI
TOTAL FIXTURE UNITS:	48 F.U.
TOTAL FLOW:	50 GPM
LOSS THRU WATER METER & RPBP	15 PSI
LOSS DUE TO ELEVATION:	0.43 X 20 = 8.6 PSI
RESIDUAL PRESSURE:	25 PSI
PRESSURE AVAILABLE FOR FRICTION LOSS:	60 - 48.6 = 11.4 PSI
ALLOWABLE FRICTION LOSS PER 100 FT.:	100 X 14.6/300 = 3.8 PSI

WATER FIXTURE UNITS

NUMBER	TYPE OF FIXTURE	UNITS PER FIXTURE	TOTAL
1	UR	4.0	4.0
3	WC	5.0	15
2	LAV	1.0	2.0
1	KS (SINGLE COMP)	2.0	3.0
1	KS (3 COMP)	3.0	1.0
4	HB	2.5	10
1	MS	3.0	3.0
3	HS	1.0	3.0
1	W	2.0	2.0
1	COFFEE BREWER	1.0	1.0
1	DRINK DISP.	1.0	1.0
1	STEAMER UNIT	2.0	2.0
TOTAL:			48 F.U.

WATER PIPE SIZE PER UPC - 2000 , APPENDIX - A : 2"

PLUMBING FIXTURE SCHEDULE

MARK	FIXTURE	MANUFACTURER/ MODEL	DESCRIPTION	ROUGH-IN SIZES CW	HW	TW	VENT	SAN	TRAP
WC-1	WATER CLOSET FLOOR MOUNT	BY OWNER	TOP SPUD, WALL MOUNT, SIPHON JET, VITREOUS CHINA WITH ELONGATED BOWL, SEAT: OLSONITE NO. 95 SOLID PLASTIC OPEN FRONT SEAT WITH STAINLESS STEEL POSTS & NUTS. ELECTRONIC FLUSH VALVE: SLOAN PLUS MODEL #8111-LH-MC BATTERY OPERATED, 1.6 G.P.F. WITH VACUUM BREAKER. CARRIER: JAY R. SMITH #0210Y SERIES.	1"	---	---	2"	4"	---
WC-2	WATER CLOSET FLOOR MOUNT HANDICAPPED	BY OWNER	TOP SPUD, WALL MOUNT, SIPHON JET, VITREOUS CHINA WITH ELONGATED BOWL, SEAT: OLSONITE NO. 95 SOLID PLASTIC OPEN FRONT SEAT WITH STAINLESS STEEL POSTS & NUTS. ELECTRONIC FLUSH VALVE: SLOAN PLUS MODEL #8111-LH-MC BATTERY OPERATED, 1.6 G.P.F. WITH VACUUM BREAKER. CARRIER: JAY R. SMITH #0210Y SERIES. MOUNT AT ADA HEIGHT REQUIREMENTS.	1"	---	---	2"	4"	---
U-1	URINAL WALL MOUNT	BY OWNER	WASHOUT ACTION, VITREOUS CHINA WITH ELONGATED 14" RIM, SLOAN OPTIMA PLUS#8186-0.5-LH-MC, CHROME PLATED 0.5 G.P.F. WITH BATTERY OPERATED FLUSH SYSTEM. JAY R. SMITH NO. 0636 URINAL SUPPORT.	3/4"	---	---	1 1/2"	2"	---
U-2	URINAL WALL MOUNT HANDICAPPED	BY OWNER	WASHOUT ACTION, VITREOUS CHINA WITH ELONGATED 14" RIM, SLOAN OPTIMA PLUS#8186-0.5-LH-MC, CHROME PLATED 0.5 G.P.F. WITH BATTERY OPERATED FLUSH SYSTEM. JAY R. SMITH NO. 0636 URINAL SUPPORT.	3/4"	---	---	1 1/2"	2"	---
L-1	LAVATORY SELF RIMMING HANDICAPPED	BY OWNER	SELF RIMMING, FRONT OVERFLOW, VIRTEOUS CHINA 4" CENTERS FAUCET & GRID DRAIN : SLOAN #EAF-150-ISM SERIES, BATTERY OPERAED ELECTRONIC HAND WASH FACET, 0.5 G.P.M. VANDAL RESISTANT SPRAY OUTLET. STOPS AND SUPPLIES: CHICAGO FAUCETS #1028 ANGLE VALVE & RISERS DRAIN AND P-TRAP: CHROME PLATED CAST BRASS, 17 GA. WITH WALL FLANGE TRIM INSULATION: TRUEBRO OR EQUAL	1/2"	1/2"	1/2"	1 1/2"	2"	1 1/4" X 1 1/2"
L-2	LAVATORY/HAND SINK WALL HUNG HANDICAPPED	BY OWNER	SELF RIMMING, FRONT OVERFLOW, VIRTEOUS CHINA 4" CENTERS FAUCET & GRID DRAIN : SLOAN #EAF-150-ISM SERIES, BATTERY OPERAED ELECTRONIC HAND WASH FACET, 0.5 G.P.M. VANDAL RESISTANT SPRAY OUTLET. STOPS AND SUPPLIES: CHICAGO FAUCETS #1028 ANGLE VALVE & RISERS DRAIN AND P-TRAP: CHROME PLATED CAST BRASS, 17 GA. WITH WALL FLANGE TRIM INSULATION: TRUEBRO OR EQUAL	1/2"	---	1/2"	1 1/2"	2"	1 1/4" X 1 1/2"
HB-1	NON-FREEZE WALL HYDRANT EXPOSED HOSE CONN.	JAY R. SMITH MODEL NO. 5609QT	QUARTER TURN, HOSE CONNECTION, INTEGRAL VACUUM BREAKER, T- HANDLE KEY	3/4"	---	---	---	---	---
GH	GROUND HYDRANT	BY OWNER	LOCATED IN TRASH ENCLOSURE WITH INTERNAL VACUUM BREAKER	---	3/4"	---	---	---	---
FD-1	FLOOR DRAIN GENERAL USE	JAY R. SMITH MODEL NO. 2005A	CAST IRON BODY WITH ADJUSTABLE STRAINER WITH TRAP PRIMER - 1/2" CW FOR TRAP.	---	---	---	---	2"	2"
FD-2	FLOOR DRAIN	JAY R. SMITH MODEL NO. 2005A	CAST IRON BODY WITH ADJUSTABLE STRAINER WITH TRAP PRIMER - 1/2" CW FOR TRAP.	---	---	---	---	3"	2"
SS-1	MOP SINK MOLDED STONE	FIAT MODEL NO. TSB-3000	MOLDED STONE 24X24X12 DEEP DROP FRONT, HOSE & BRACKET #832-AA-30, INTEGRAL DRAIN FAUCET : CHICAGO FAUCETS #897, VACUUM BREAKER, INTEGRAL STOPS, ADJUSTABLE WALL BRACE, PAIL HOOK.	3/4"	3/4"	---	2"	3"	2"
FS-1	FLOOR SINK	COMMERCIAL ENAMELING MODEL NO. 908	12"X12"X8" DEEP, CAST IRON BODY WITH ACID RESISTING ENAMEL AND DOME STRAINER. GRATE AS INDICATED ON PLANS	---	---	---	---	2"	2"
FS-2	FLOOR SINK	COMMERCIAL ENAMELING MODEL NO. 908	12"X12"X8" DEEP, CAST IRON BODY WITH ACID RESISTING ENAMEL AND DOME STRAINER. GRATE AS INDICATED ON PLANS	---	---	---	---	4"	2"
SA	SHOCK ABSORBER (WATER HAMMER ARRESTOR)	PRECISION PLUMBING PRODUCTS A-F	- - -	---	---	---	---	---	---
TP-1	TRAP PRIMER	PRECISION PLUMBING PRODUCTS PR-500	- - -	1/2"	---	---	---	---	---
RD-1	ROOF DRAIN	JAY R. SMITH MODEL NO. 1010Y	CAST IRON BODY, CAST IRON DOME, UNDERDECK CLAMP	---	---	---	SEE PLAN FOR EXACT SIZE REQUIRED		
ORD-1	OVERFLOW ROOF DRAIN	JAY R. SMITH MODEL NO. 1070Y	CAST IRON BODY, CAST IRON DOME, UNDERDECK CLAMP, 2" STANDPIPE - - -	---	---	---	SEE PLAN FOR EXACT SIZE REQUIRED		
SC	SILLCOCK	BY OWNER		---	3/4"	---	---	---	---
WB	WASHER BOX	GUY GRAY MODEL NO. PL200	HIGH IMPACT POLYSTYRENE WASHER BOX PROVIDE 1/2" HOSE BIBBS WITH INTEGRAL VACUUM BREAKERS	1/2"	1/2"	---	2"	2"	2"

PLUMBING EQUIPMENT SCHEDULE

No.	REMARKS	GAS K BTU	GAS SIZE	WASTE TYPE	WASTE SIZE	COLD WTR. SIZE	HOT WTR. SIZE	DESCRIPTION	No.
1	INSULATED INDIRECT WASTE FROM REFRIG BASE & COLD TOP TO F.S. - (ALL IW TO FS TO BE SECURED TO CABINET OVER F.S.). INDIRECT WASTE LINE FROM STEAMERS TO F.S.			F.S.	INS. 1" IW	1/2"		MAIN COOK COUNTER - INC. PAPER BINS, FRY DUMP, REFRIG. BASE, STEAMERS, & COLD TOP	1
6	INDIRECT WASTE TO FLOOR SINKS - SEE DET. 6/P3.1			F.S.	2" IW	1/2" (3)	1/2" (3)	POT SINKS & VEGETABLE SINK	6
9									9
12	G.C. TO INSTALL 6" DIA. SYRUP LINE CONDUIT BELOW FLOOR AS SHOWN ON PLANS; SEE ITEM 40							DRINK STATION CABINET	12
25	INDIRECT WASTE TO FLOOR SINK-PART OF ITEM 27			FS	3/4" IW			STEAMER AT BACK LINE	25
31	PROVIDE HANDLE SHUT-OFF & INSTALL QUICK DISCONNECT (DET. 3/P-3.1). HOSE & STRAP PROVIDED PROVIDE CATALYTIC CONVERTER, WHEN REQUIRED - ENGELHARD - CHARCAT9 910	96	3/4"					BROILER UNIT	31
32	COMPLETE INDIRECT WASTE TO FS AT ITEM 1			F.S.	1/2" IW	1/2"		FOOD WARMER UNITS (2) FULL SIZE	32
35	PROVIDE HANDLE SHUT-OFF & INSTALL QUICK DISCONNECT (DET. 4/P-3.1). HOSE & STRAP PROVIDED (2)	320	1-1/2"					4-BAY FRYER UNIT w/FILTER UNIT	35
38	PROVIDE HANDLE SHUT-OFF & INSTALL QUICK DISCONNECT (DET. 2/P-3.1). HOSE & STRAP PROVIDED	96	1"					GRIDDLE UNIT 48"	38
39	*USES SAME GAS OUTLET AS GRIDDLE - PROV. "1" BTWN, APPLIANCES & QUICK DISCONNECT - INSTALL REGULATOR PROVIDED (DET. 2/P-3.1)	30	*					OVEN UNIT 48"	39
40	PROVIDE INDIRECT WASTE TO F.S. PER DET. 6/P3.1 *DRINK SYST. INSTALLER TO MAKE FINAL CONNECTIONS			F.S.	INS. 3/4" IW	1/2"		SELF-SERVE DRINK DISPENSER UNITS (2)	40
42	PROVIDE ANGLE STOP ON HW STUB					1/2"		STEAM TABLE	42
46	INSTALL W/SUPPORT BRACKET PROVIDED SECURED TO WALL					1/2"	1/2"	PRE-RINSE UNIT	46
53	WASTE LINE TO BE INSULATED WITH TRAP AT FLOOR SINK			FS	1" COPPER IW			COOLER UNIT	53
54	WASTE LINE TO BE INSULATED WITH TRAP AT FLOOR SINK #25			FS	1" COPPER IW			FREEZER UNIT	54
55						1/2"		(1) COFFEE BREWER UNIT & AIRPOTS & RACK	55
58	PROVIDE BACKFLOW DEVICE ASSEMBLY INCLUDES PANEL BOARD, CARBONATORS AND LINE KIT WASTE LINE TO BE INSULATED TO FLOOR SINK & SECURED			FS	3/4" IW	1/2"		DRINK SYSTEM: DROP-IN DISP.; 2 HEAD DISP. @ DRIVE THRU CARBONATOR PANEL	58
59	INSULATED WASTE TO FLOOR SINK FROM MACHINE & BIN - SECURE			FS	1" IW	1/2"		ICE MACHINE & BIN	59
67	SEE ITEM 1							DROP IN COLD PAN	67
89	G.C. TO PROVIDE & INSTALL SEISMIC STRAPS SIM. TO WTR. HTR.							BULK CO2 TANK w/SERVICE ACCESS DOOR	89
98	PROVIDE HAND SINKS PER SPECS.							HAND SINKS	98
111	PROVIDE FLOOR DRAINS PER SPECS			DIRECT	2"	1/2"	1/2" TEMP.	FLOOR DRAINS	111
112	PROVIDE MOP SINK, FAUCET, & HOSE BIB PER SPECS.			DIRECT	3"	1/2"	1/2"	MOP SINK & FAUCET	112

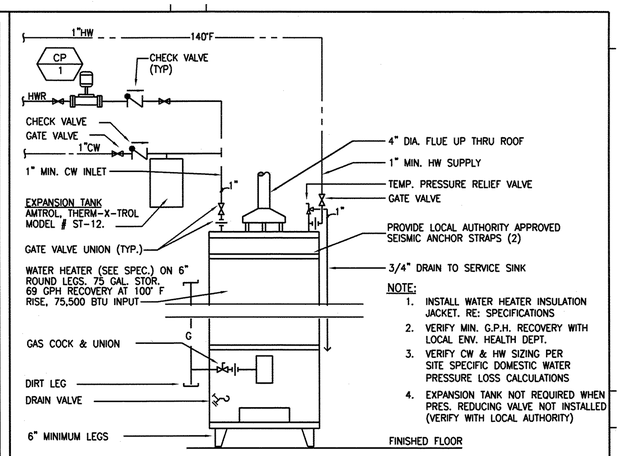

WATER HEATER DIAGRAM — SCALE: N.T.S. — 1

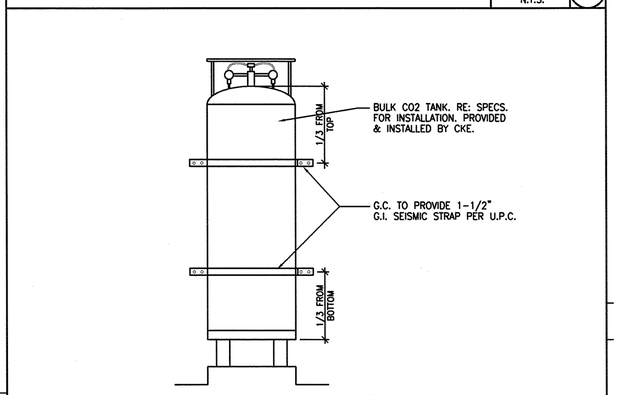

BULK CO2 TANK — SCALE: N.T.S. — 2

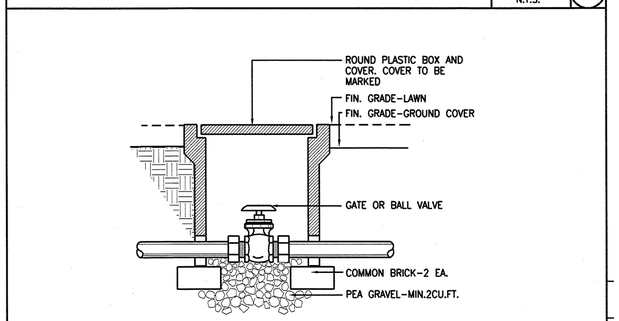

NOTE:
1. FOR GATE VALVES 2" AND SMALLER, USE HANDWHEEL. FOR LARGER THAN 2" SQ. OPERATING NUT.
2. FROST-ZONE MIN. BURIAL DEPTH = 2'-0"

GATE VALVE — SCALE: N.T.S. — 3

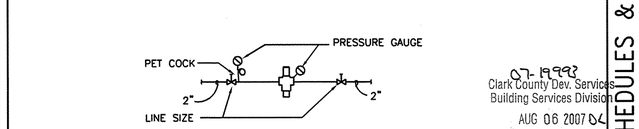

PRESSURE REDUCING VALVE: SHALL BE WILKINS SERIES #500YSBR WITH INTEGRAL BRONZE STRAINER, UNION CONNECTIONS AND LINE-SIZE SHUT-OFF VALVES. SITE CONDITION SERVED BY PRESSURES EXCEEDING 125 P.S.I. SHALL USE #500HRYSBR

MIN. SET PRESS.: 60 P.S.I. - SITE CONDITION P.S.I. SHALL BE DETERMINED BY DOMESTIC WATER CALCULATION

07-19993
Clark County Dev. Services
Building Services Division
AUG 06 2007
Reviewed and Accepted
Wilidan

PRESSURE REDUCING VALVE ASSEMBLY — SCALE: N.T.S. — 4

THIS DRAWING IS AN INSTRUMENT OF SERVICE BETWEEN THE ARCHITECT AND HIS CLIENT, BUT REMAINS THE PROPERTY OF THE ARCHITECT.
© ALL RIGHTS RESERVED 2005

architecture/engineering/site
GARY GUY WILSON AIA STUDIOS...
7625 South Industrial Road, Suite#100
Las Vegas, Nevada 89139
(702)876-0668
professional corp / certified n.c.a.r.b.
planning/interior design
4175 South Riley Street
Suite 200
Las Vegas, NV 89147
Tel: 702.873.0670
Fax: 702.873.1098
www.shnevada.com
MEP: SHNEVADA
CONSULTANTS:
CIVIL: CIVILWORKS, INC.
STRUCTL: WRIGHT ENGINEERS

CARL'S JR RESTAURANT
@ RUSSELL ROAD & EASTERN AVE.
McCARRAN MARKETPLACE

FOR: S.L. INVESTMENTS, MR. STEVE LARSON
CLARK COUNTY, NEVADA

PROJ.NO.	13520701.00
PROJ.ARCH.	G.G.WILSON,AIA
PROJ.MGR.	MVM
JOB CAPT.	MVM
TECH'N	.
ARCH.CHK.	GGW
PH-2/3	02FEB07
PH-4	30MAR07
PH-5	02MAY07

REVISIONS
1 6/12/07 BLDG DEPT COMMENTS

PRINTS REQUIRE ARCHITECT'S SEAL & SIGN. FOR PROOF OF VALIDITY

PROFESSIONAL ENGINEER-STATE OF NEVADA
ALEXANDER JANKOVICH
EXPIRES 06/30/08
MECHANICAL
No. 13957
6/28/07

LV070018

SHT.NO. P-2

PLUMBING SCHEDULES & DIAGRAMS

P:\P931\V070018\PLBG\P-2_Schedules.dwg, 6/28/2007 11:29:21 AM, jlorenzo

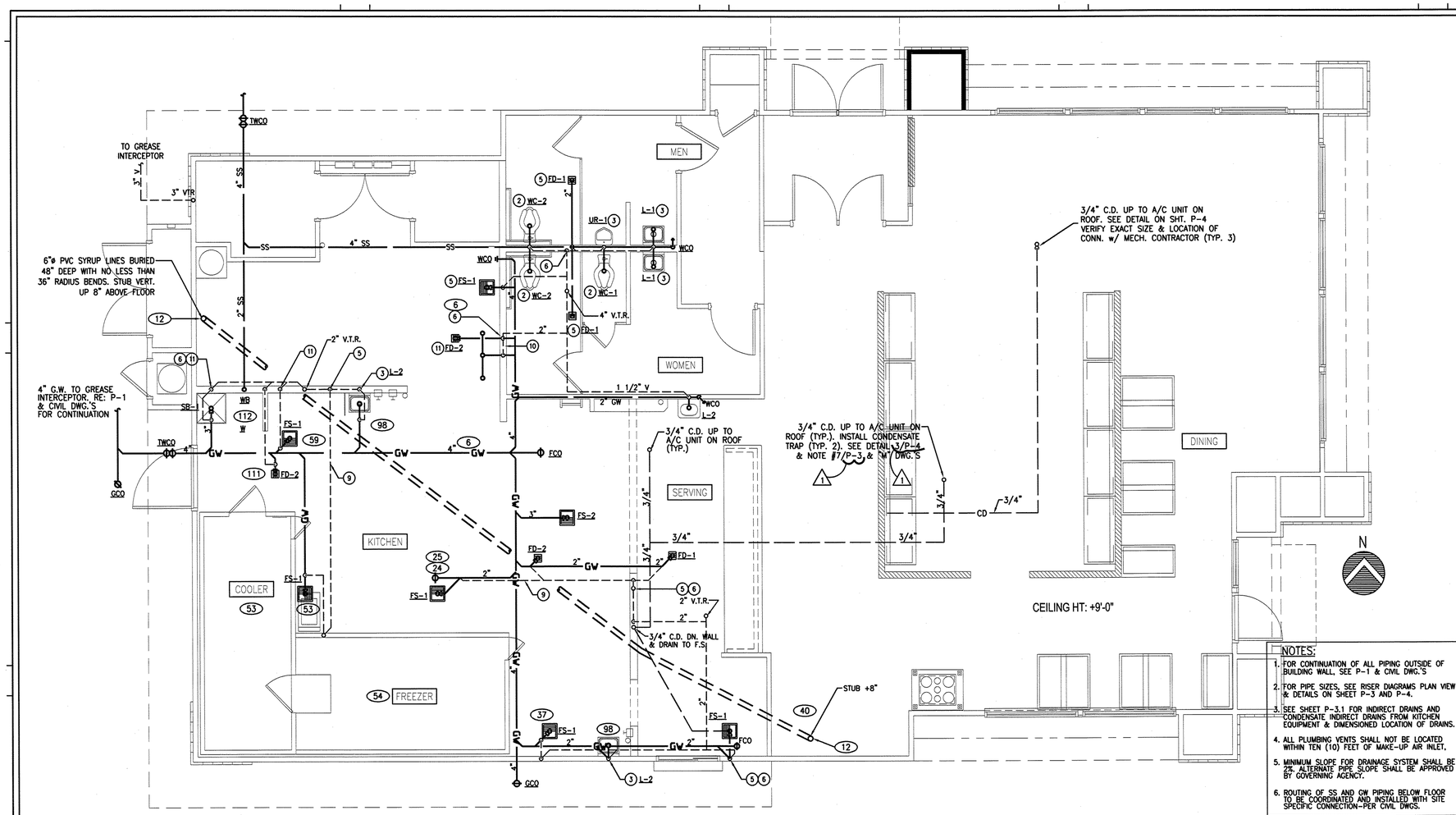

NOTES:

1. FOR CONTINUATION OF ALL PIPING OUTSIDE OF BUILDING WALL, SEE P-1 & CIVIL DWG.'S
2. FOR PIPE SIZES, SEE RISER DIAGRAMS PLAN VIEW & DETAILS ON SHEET P-3 AND P-4.
3. SEE SHEET P-3.1 FOR INDIRECT DRAINS AND CONDENSATE INDIRECT DRAINS FROM KITCHEN EQUIPMENT & DIMENSIONED LOCATION OF DRAINS.
4. ALL PLUMBING VENTS SHALL NOT BE LOCATED WITHIN TEN (10) FEET OF MAKE-UP AIR INLET.
5. MINIMUM SLOPE FOR DRAINAGE SYSTEM SHALL BE 2%. ALTERNATE PIPE SLOPE SHALL BE APPROVED BY GOVERNING AGENCY.
6. ROUTING OF SS AND GW PIPING BELOW FLOOR TO BE COORDINATED AND INSTALLED WITH SITE SPECIFIC CONNECTION-PER CIVIL DWGS.

PLUMBING WASTE & VENT PLAN

SCALE: 1/4" = 1'-0" (1)

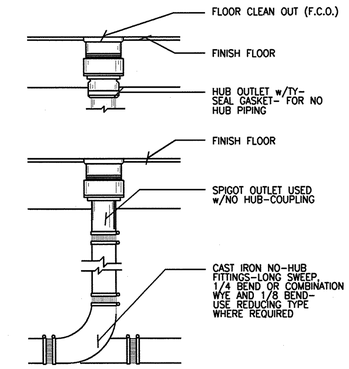

FLOOR CLEANOUTS

SCALE: N.T.S. (2)

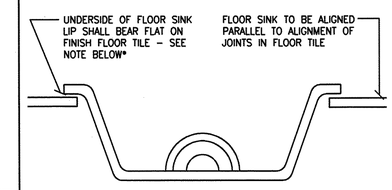

NOTE:
IT SHALL BE THE RESPONSIBILITY OF THE CONTRACTOR TO VERIFY THE FINISH ELEVATION OF THE FLOOR SINKS IN RELATION TO THE FINISH FLOOR SURFACE, WITH THE HEALTH INSPECTOR. FAILURE ON THE PART OF THE PLUMBER TO SET THE FLOOR SINKS ACCORDING TO THE LOCAL CODE SHALL CAUSE THE PLUMBER TO CORRECT THE ELEVATION AT HIS OWN EXPENSE INCLUDING CHARGES FROM OTHER ASSOCIATED TRADES AND WITHOUT ADDITIONAL COST TO OWNER.

TYPICAL FLOOR SINK

SCALE: N.T.S. (3)

CONSTRUCTION NOTES

1. 4" S 4" GW BEL GRADE-FOR CONT/ SEE SHT. P-1
2. 2"V UP FR 4"S BEL FLR
3. 2"W DN THRU WCO 1-1/2"V UP
4. 2"V UP THRU WCO FR 4"W BEL FLR
5. 2"V UP THRU WCO FR 2" W BEL FLR
6. 2"V UP TO ABV CLG
7. 1"C.D. FR A/C UNIT ON ROOF
8. 1"CD DN IN WALL TO FLR SK W/AIR GAP
9. 2" FLAT VENT BEL FLR
10. 2" GW DN THRU WCO 2" V UP TO ABV CLG
11. 2" V UP THRU WCO FR 3" W BEL FLR

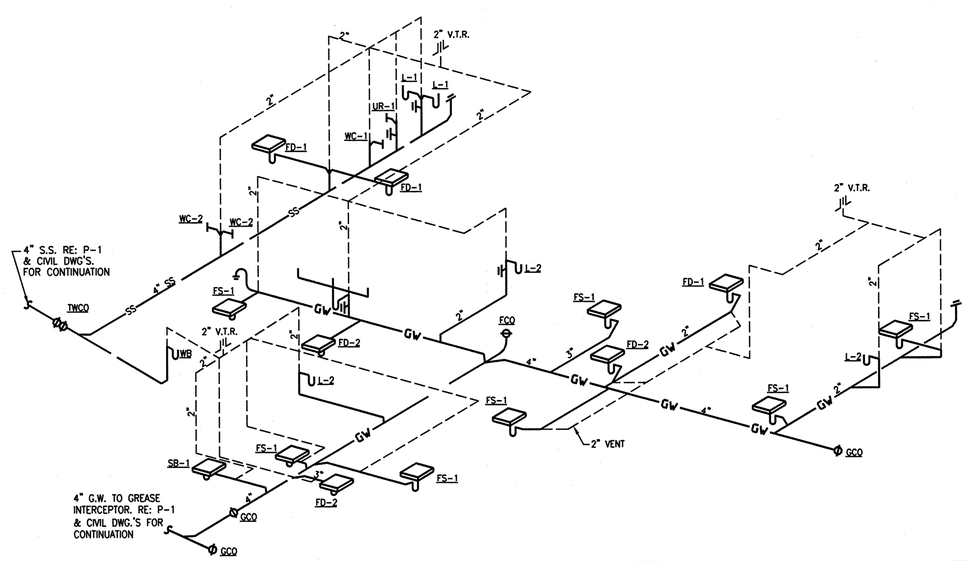

WASTE & VENT RISER DIAGRAM

SCALE: N.T.S. (5)

NOTES

1. ALL INTERCEPTOR COVERS SHALL BE PERMANENTLY MARKED "INTERCEPTOR" AND COVERS FOR SAMPLING BOX SHALL BE PERMANENTLY MARKED "SAMPLE".
2. REQUEST FOR VARIANCES MUST BE SUBMITTED IN WRITING WITH AS-BUILT OF EXISTING CONDITIONS.
3. ALL INTERCEPTORS TO BE VENTED IN ACCORDANCE WITH THE PLUMBING CODE.

GREASE INTERCEPTOR SIZING FORMULA - IN ACCORDANCE WITH SOUTHERN NEVADA 2000 PLUMBING CODE AMENDMENTS.

Q = INTERCEPTOR SIZE IN GALLONS
D = NUMBER OF SEATS (170)
GL = GALLONS OF WASTE WATER PER DINER PER MEAL (4)
HR = NUMBER OF BUSINESS HOURS (24)
LF = LOADING FACTOR W/ DISHWASHER (1)

$Q = D^{.75} \times GL \times HR/2 \times LF$

$Q = 50^{.75} \times 4 \times 24/2 \times 1 = 902$ GAL.

GREASE INTERCEPTOR HAS A CAPACITY OF 1000 GALLONS SEE CIVIL PLANS FOR EXACT LOCATION.

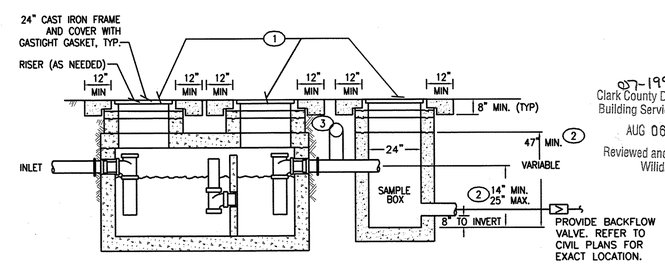

Clark County Dev. Services
Building Services Division
AUG 06 2007
Reviewed and Accepted
Wildan

GREASE INTERCEPTOR

SCALE: N.T.S. (4)

THIS DRAWING IS AN INSTRUMENT OF SERVICE BETWEEN THE ARCHITECT AND HIS CLIENT, BUT REMAINS THE PROPERTY OF THE ARCHITECT.
© ALL RIGHTS RESERVED 2005

architecture/engineering/site
GARY GUY WILSON AIA
7625 South Industrial Road, Suite#100
Las Vegas, Nevada 89139
(702)876-0668
professional corp / certified n.c.a.r.b.
planning/interior design
STUDIOS...
NEVADA
4175 South Riley Street
Suite 200
Las Vegas, NV 89147
Tel: 702.873.0670
Fax: 702.873.1098
www.shnevada.com
MEP:
CONSULTANTS:
CIVIL: CIVILWORKS, INC.
STRUCTL: WRIGHT ENGINEERS

CARL'S JR RESTAURANT
@ RUSSELL ROAD & EASTERN
McCARRAN MARKETPLACE

FOR: S.L. INVESTMENTS, MR. STEVE LARSON
CLARK COUNTY, NEVADA

PROJ.NO.	13520701.00
PROJ.ARCH.	G.G.WILSON,AIA
PROJ.MGR.	MVM
JOB CAPT.	MVM
TECH'N	.
ARCH.CHK.	GGW
PH-2/3	02FEB07
PH-4	30MAR07
PH-5	02MAY07

REVISIONS
1 6/12/07 BLDG DEPT COMMENTS

PRINTS REQUIRE ARCHITECT'S SEAL & SIGN FOR PROOF OF VALIDITY

PROFESSIONAL ENGINEER-STATE OF NEVADA
ALEXANDER JANKOVICS
EXPIRES 06/30/07
MECHANICAL
No. 13967
6/28/07

LV070018

PLUMBING WASTE & VENT PLAN, RISER DIAGRAM

SHT.NO. P-3

P:\P931\V070018\P\BIG\P-3_Sen.dwg, 6/28/2007 11:39:02 AM, jpenaso

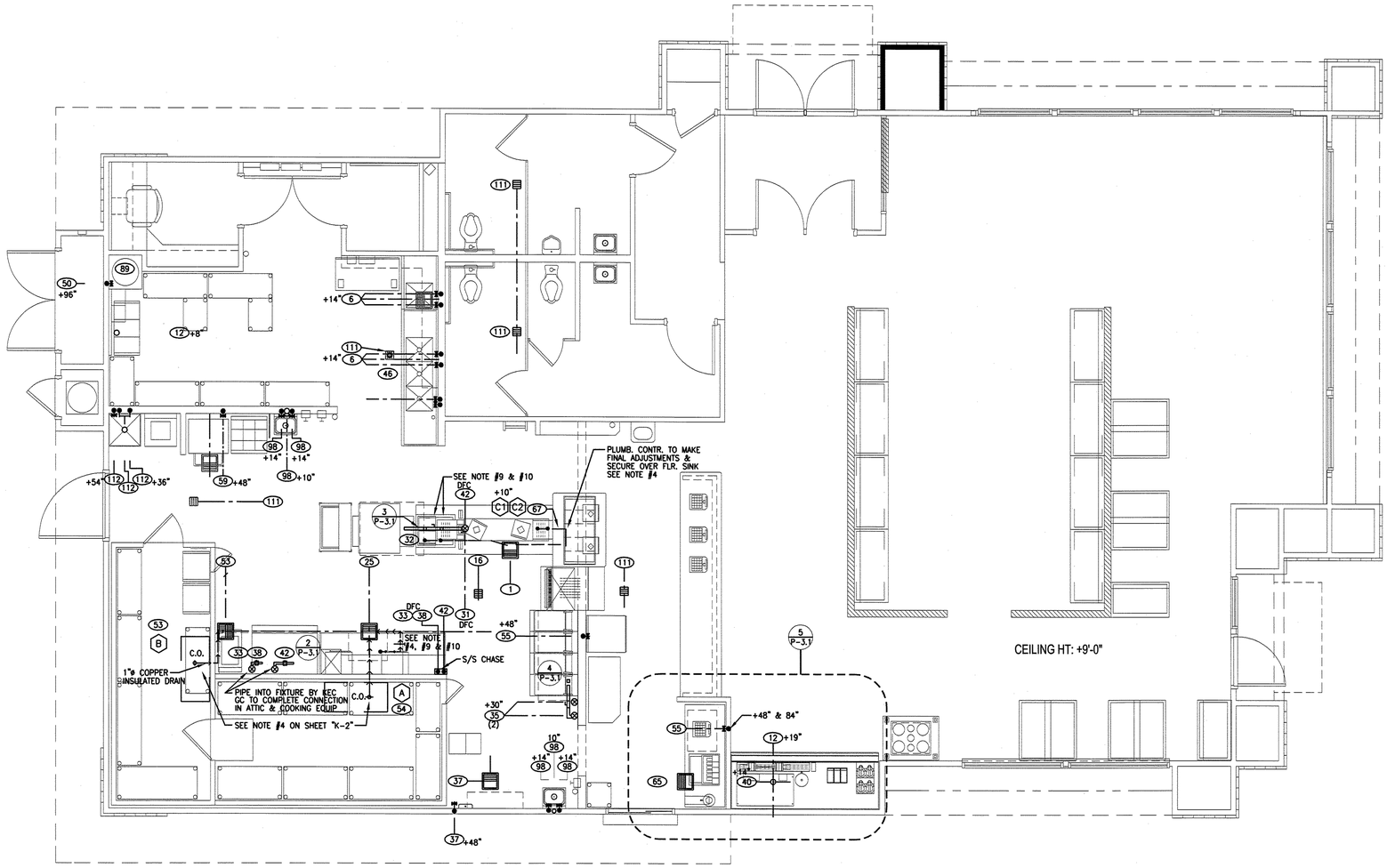

LEGEND

INDIRECT WASTE LINES SEE NOTES 3 & 4.	←—←—●

N

EQUIPMENT PLUMBING PLAN — SCALE: 1/4"=1'-0" — 1

NOTES

1. PLUMBING OUTLETS SHOWN ON THIS PLAN ARE FOR KITCHEN EQUIPMENT PER SHEET K-1. SEE PLUMBING PLANS FOR ADDITIONAL PLUMBING.
2. DIMENSIONS START FROM OUTSIDE FACE OF STUD WALL AND OR FACE OF STUD WALL AND RUN TO CENTERLINE OF OUTLETS. HEIGHTS OF OUTLETS ARE FROM FIN. SLAB TO CENTERLINE OF OUTLET.
3. PLUMBER TO CONNECT AND EXTEND ALL INDIRECT WASTE LINES FROM EQUIPMENT AND FIXTURES TO NEAREST FLOOR SINK. INSULATE ALL COLD LINES AND REFRIG. WASTE LINES. (SEE SPECS.)
4. ALL SERVICE LINES AND INDIRECT WASTE LINES TO BE RIGIDLY SECURED WITH METAL FASTENERS. NO PLASTIC STRAPS. (SEE SPECS.)
5. PLUMBER TO PROVIDE AND INSTALL ALL SYRUP LINE CONDUIT AS SHOWN WITH MIN. 36" BENDS BURIED 48". NO FACTORY "L's". JOINTS TO BE WATER TIGHT.
6. PLUMBER TO SECURE ALL PERMITS, SUPPLY ALL MATERIALS NECESSARY EQUIPMENT FITTINGS (PER SPECS) TO COMPLY WITH ALL CODES AND LOCAL REGULATIONS TO THE SATISFACTION OF THE OWNER AND JURISDICTIONAL AUTHORITIES.
7. PLUMBER TO PROVIDE WATER HAMMER ARRESTORS, SHUT-OFF VALVES REGULATORS AND OTHER DEVICES PER "P" DRAWINGS.
8. PLUMBER TO INSTALL SAFETY STRAPS ON BROILER, GRIDDLE, AND FRYER. STRAP WILL BE PROVIDED WITH FLEX HOSES BY OWNER.
9. K.E.C. TO INSTALL UNIONS AT ALL STEAMERS BEFORE EXTENDING INDIRECT WASTE TO FLOOR SINK.
10. K.E.C. TO INSTALL BALL VALVES AT EACH STEAMER INDIRECT WASTE.

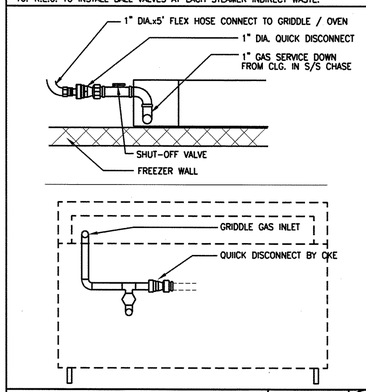

BACK OF GRIDDLE/OVEN — SCALE: N.T.S. — 2

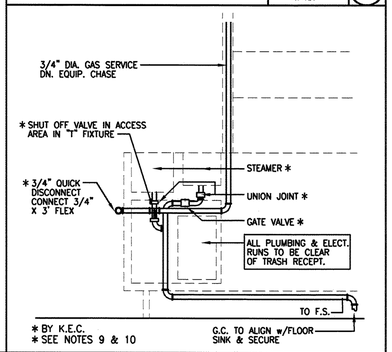

GAS & WASTE @ BROILER — SCALE: N.T.S. — 3

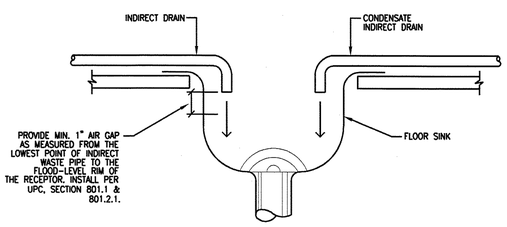

INDIRECT DRAIN AND CONDENSATE INDIRECT DRAIN — SCALE: N.T.S. — 6

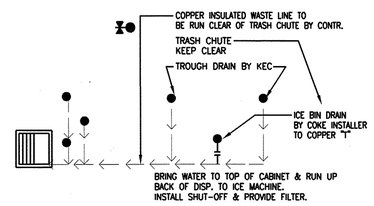

DRINK DISPENSER DRAIN LINES — SCALE: 1/2"=1'-0" — 5

07-19993
Clark County Dev. Services
Building Services Division
AUG 06 2007 DL
Reviewed and Accepted
Willidan

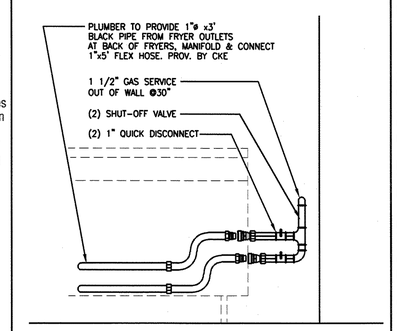

GAS @ FRYER — SCALE: N.T.S. — 4

THIS DRAWING IS AN INSTRUMENT OF SERVICE BETWEEN THE ARCHITECT AND HIS CLIENT, BUT REMAINS THE PROPERTY OF THE ARCHITECT.
© ALL RIGHTS RESERVED 2005

AIA STUDIOS... planning/interior design
(702)876-0668 professional corp / certified n.c.a.r.b.
GARY GUY WILSON
7625 South Industrial Road, Suite#100
Las Vegas, Nevada 89139

MEP: SH NEVADA
4175 South Riley Street
Suite 200
Las Vegas, NV 89147
Tel: 702.873.7070
Fax: 702.873.1098
www.shnevada.com

CONSULTANTS:
CIVIL: CIVILWORKS, INC.
STRUCTL: WRIGHT ENGINEERS

CARL'S JR RESTAURANT
@ RUSSELL ROAD & EASTERN AVE.
McCARRAN MARKETPLACE
FOR: S.L. INVESTMENTS, MR. STEVE LARSON
CLARK COUNTY, NEVADA

PROJ.NO.	13520701.00
PROJ.ARCH.	G.G.WILSON,AIA
PROJ.MGR.	MVM
JOB CAPT.	MVM
TECH'N	
ARCH.CHK.	GGW
PH-2/3	02FEB07
PH-4	30MAR07
PH-5	02MAY07

REVISIONS
1 6/12/07 BLDG DEPT COMMENTS

PRINTS REQUIRE ARCHITECT'S SEAL & SIGN. FOR PROOF OF VALIDITY

PROFESSIONAL ENGINEER-STATE OF NEVADA
ALEXANDER JANKOVICS
EXPIRES 06/30/07
MECHANICAL
No. 13957
6/28/07

LV070018

PLUMBING EQUIPMENT ROUGH-IN PLAN

SHT.NO. P-3.1

P:\PROJ\LV070018\PLAN\P-3.1_Piping.dwg, 6/28/2007 11:26:29 AM, jpascual

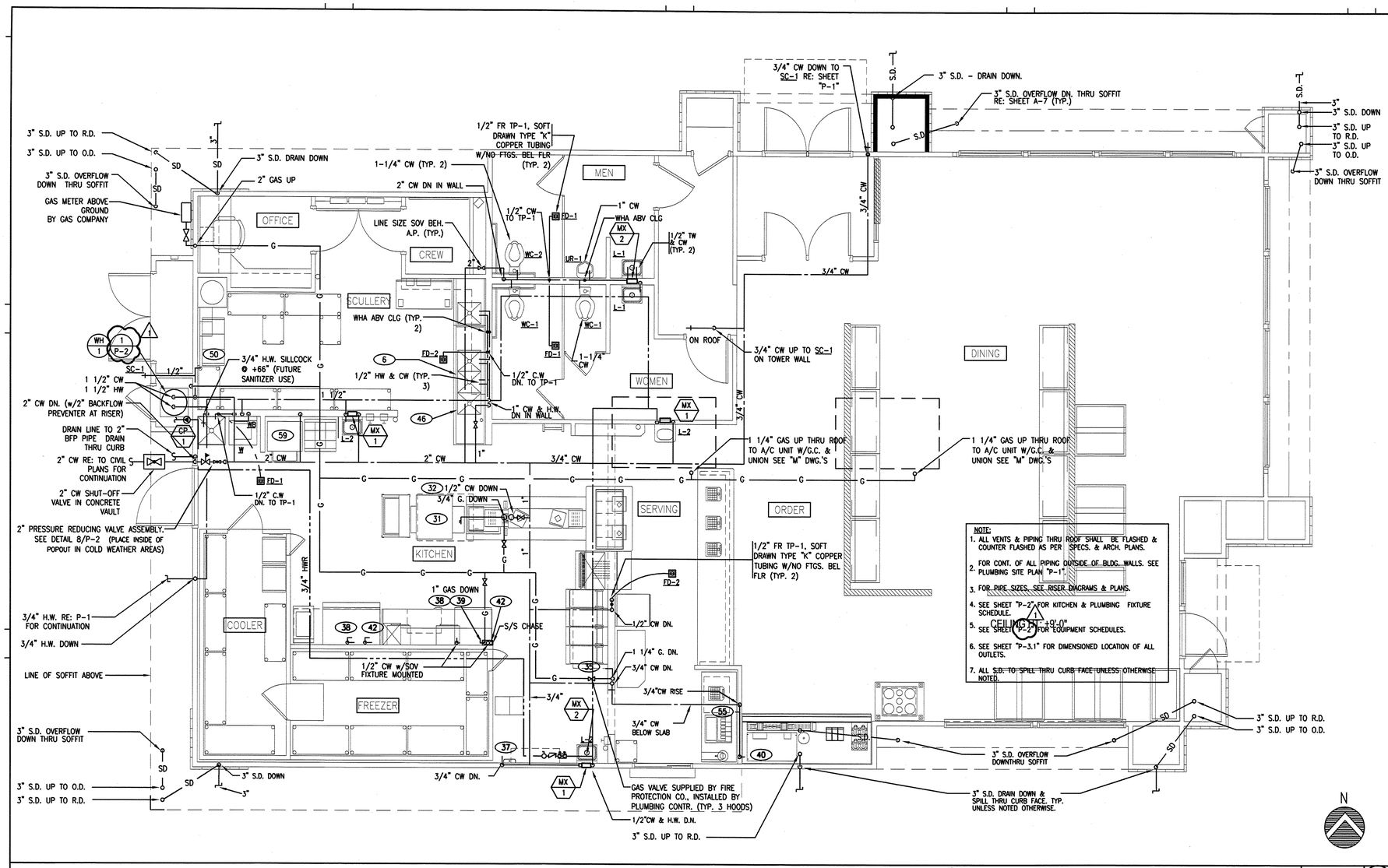

NOTE:
1. ALL VENTS & PIPING THRU ROOF SHALL BE FLASHED & COUNTER FLASHED AS PER SPECS. & ARCH. PLANS.
2. FOR CONT. OF ALL PIPING OUTSIDE OF BLDG. WALLS. SEE PLUMBING SITE PLAN "P-1".
3. FOR PIPE SIZES, SEE RISER DIAGRAMS & PLANS.
4. SEE SHEET "P-2" FOR KITCHEN & PLUMBING FIXTURE SCHEDULE.
5. SEE SHEET "P-2" FOR EQUIPMENT SCHEDULES.
6. SEE SHEET "P-3.1" FOR DIMENSIONED LOCATION OF ALL OUTLETS.
7. ALL S.D. TO SPILL THRU CURB FACE UNLESS OTHERWISE NOTED.

CEILING HT. +9'-0"

PLUMBING FLOOR PLAN (HOT & COLD WATER & GAS PIPING)

SCALE: 1/4" = 1'-0" (1)

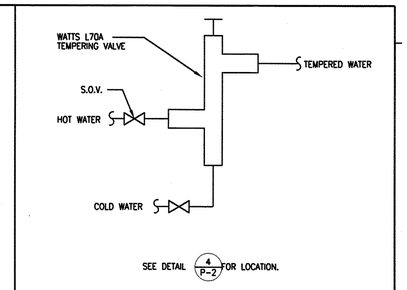

WATER TEMPERING VALVE

SCALE: N.T.S. (2)

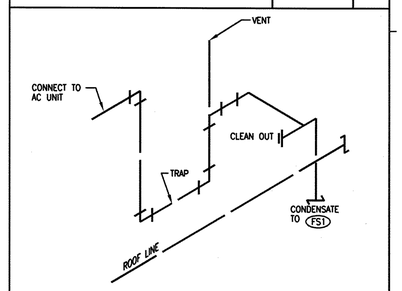

CONDENSATE TRAP

SCALE: N.T.S. (3)

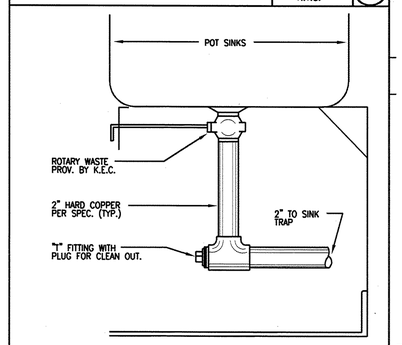

POT SINK WASTE

SCALE: N.T.S. (4)

GAS LOAD:

AC 1		180,000 B.T.U.
AC 2		245,000 B.T.U.
31	BROILER	96,000 B.T.U.
35	FRYER	320,000 B.T.U.
38 / 39	GRIDDLE/OVEN	150,000 B.T.U.
	FUTURE	30,000 B.T.U.
WH 1	WATER HEATER	75,500 B.T.U.
	TOTAL GAS LOAD	1096.5 MBH

(A) MECHANICAL SHUT-OFF PROV. BY FIRE PROTECTION CONTRACTOR-INSTALLED BY PLUMBING CONTRACTOR

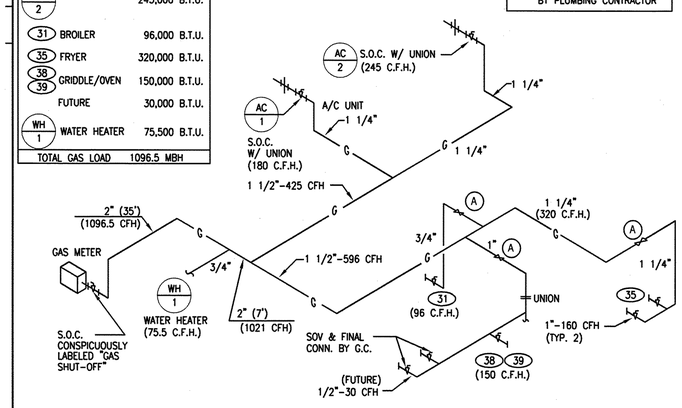

GAS RISER DIAGRAM

SCALE: N.T.S. (7)

(1) P.P.P. - WATER HAMMER ARRESTOR (WHA) (PDI-B). LOCATE IN CEILING; ACCESSIBLE THROUGH GRID CEILING.

(2) USE SOFT COPPER WITH NO JOINTS BELOW SLAB

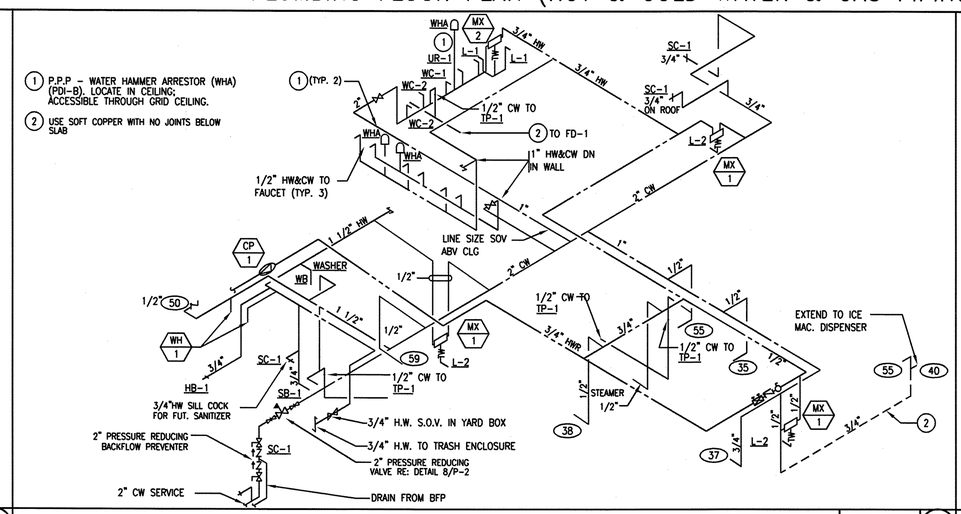

HOT & COLD WATER RISER DIAGRAM

SCALE: N.T.S. (6)

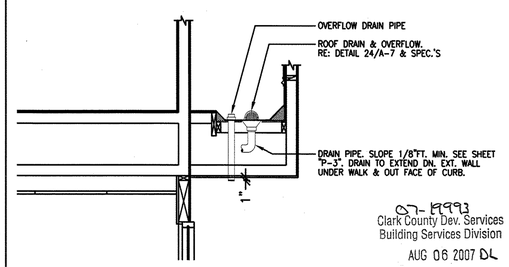

97-19993
Clark County Dev. Services
Building Services Division
AUG 06 2007 DL
Reviewed and Accepted
Williden

TYPICAL ROOF DRAIN PIPING DETAIL

SCALE: 1/2"=1'-0" (5)

THIS DRAWING IS AN INSTRUMENT OF SERVICE BETWEEN THE ARCHITECT AND HIS CLIENT, BUT REMAINS THE PROPERTY OF THE ARCHITECT.
(C) ALL RIGHTS RESERVED 2005

AIA planning/interior design STUDIOS... (702)876-0668 professional corp / certified n.c.o.r.b.
architecture/engineering/site
GARY GUY WILSON
7625 South Industrial Road, Suite#100
Las Vegas, Nevada 89139
4175 South Riley Street
Suite 200
Las Vegas, NV 89147
Tel: 702.313.6670
Fax: 702.873.1098
www.shnevada.com
MEP: SH NEVADA
CONSULTANTS:
CIVIL: CIVILWORKS, INC.
STRUCTL: WRIGHT ENGINEERS

CARL'S JR RESTAURANT
@ RUSSELL ROAD & EASTERN AVE.
McCARRAN MARKETPLACE

FOR: S.L. INVESTMENTS, MR. STEVE LARSON

CLARK COUNTY, NEVADA

PLUMBING GAS & WATER PLAN, RISER DIAGRAM

PROJ.NO.	13520701.00
PROJ.ARCH.	G.G.WILSON,AIA
PROJ.MGR.	MVM
JOB CAPT.	MVM
TECH'N	-
ARCH.CHK.	GGW
PH-2/3	02FEB07
PH-4	30MAR07
PH-5	02MAY07

REVISIONS
1 6/12/07 BLDG DEPT COMMENTS

PRINTS REQUIRE ARCHITECT'S SEAL & SIGN. FOR PROOF OF VALIDITY

PROFESSIONAL ENGINEER-STATE OF NEVADA
ALEXANDER JANKOVICH
No. 13957
EXPIRES 6/30/08
MECHANICAL
6/28/07

LV070018

SHT.NO. P-4

P:\PB3\LV070018\PLBG\P-4_Isom.dwg, 6/28/2007 11:39:47 AM, jpoesso

MECHANICAL LEGEND

SYMBOL	ABBREVIATION	DESCRIPTION
	S/A	SUPPLY AIR
	R/A	RETURN AIR
	E/A	EXHAUST AIR
	O/A	OUTSIDE AIR
		FLEX DUCT WITH SPIN-IN VOLUME DAMPER
	MVD	OPPOSED BLADE MANUAL VOLUME DAMPER
1		THERMOSTAT-"A" IS ZONE NUMBER 3'-11" ABOVE FLOOR
DD		DUCT MOUNTED SMOKE DETECTOR
SD		SMOKE DETECTOR
S		TEMPERATURE SENSOR
		ROUND DUCT UP
		ROUND DUCT DOWN
		RECTANGULAR SUPPLY AIR DUCT DOWN
		RECTANGULAR SUPPLY AIR DUCT UP
		RECTANGULAR RETURN AIR DUCT DOWN
		RECTANGULAR RETURN AIR DUCT UP
		RECTANGULAR EXHAUST AIR DUCT DOWN
		RECTANGULAR EXHAUST AIR DUCT UP
		ROUND TO RECTANGULAR DUCT TRANSITION
		90° MITERED ELBOW WITH TURNING VANES
		90° SMOOTH RADIUS ELBOW (R/D=1.5)
		45° MITERED ELBOW WITH TURNING VANES
		45° SMOOTH RADIUS ELBOW
		EXPANDED THROAT TAKE-OFF
		SPIN-IN CONNECTION
	AFF	ABOVE FINISHED FLOOR
	AFG	ABOVE FINISHED GRADE
	AHU	AIR HANDLING UNIT
	BI	BACKWARDLY INCLINED
	BTUH	BRITISH THERMAL UNIT PER HOUR
	DB	DRY BULB
	(E)	EXISTING
	EAT	ENTERING AIR TEMPERATURE
	EF	EXHAUST FAN
	EWT	ENTERING WATER TEMPERATURE
	FC	FORWARD CURVED
	GA	GAUGE
	GPM	GALLONS PER MINUTE
	HD	HEAD
	LAT	LEAVING AIR TEMPERATURE
	LBS	POUNDS
	LWT	LEAVING WATER TEMPERATURE
	MBH	1,000 BRITISH THERMAL UNITS PER HOUR
	RWS	ROWS
	WB	WET BULB
	WC	WATER COLUMN

SYMBOL	ABBREVIATION	DESCRIPTION
	PRV	PRESSURE REDUCING VALVE
	CHV	CHECK VALVE
RL	RL	REFRIGERANT LIQUID
RS	RS	REFRIGERANT SUCTION
CD	CD	CONDENSATE DRAIN
D	D	DRAIN
MU	MU	MAKE-UP WATER
		RELIEF VALVE
		PIPE TURNED DOWN
		PIPE TURNED UP
		TEE TURNED DOWN
		TEE TURNED UP
		UNION
		FLANGE
		CAP/HOSE END
		WYE
		INSERTION WELL
		CONCENTRIC REDUCER
		ECCENTRIC REDUCER
		VALVE IN RISER
		ANCHOR
		GUIDE OR SLEEVE
		FLEXIBLE CONNECTOR
		DEEP SEAL TRAP

MISCELLANEOUS

SYMBOL	DESCRIPTION
1	SPECIFIC NOTE/REFERENCE NOTE
1	REVISION
	POINT OF CONNECTION
	POINT OF DISCONNECTION
1 / M1-01	INDICATES DETAIL NUMBER / SHEET NUMBER TO FIND DETAIL
S-1 / 300	AIR DEVICE TAG / CFM
AC / 1	EQUIPMENT TAG / SCHEDULE NUMBER

MECHANICAL SPECIFICATIONS

PART 1 – GENERAL

1.1 CODES AND PERMITS:

A. THE MECHANICAL WORK SHALL BE PERFORMED IN STRICT ACCORDANCE WITH THE APPLICABLE PROVISIONS OF THE INTERNATIONAL BUILDING CODE, 2000 EDITION, THE UNIFORM PLUMBING CODE, 2000 EDITION, THE UNIFORM MECHANICAL CODE, 2000 EDITION, AS ADOPTED AND INTERPRETED BY THE CLARK COUNTY BUILDING DEPT. AND THE NATIONAL FIRE PROTECTION ASSOCIATION (NFPA REGULATIONS), CURRENT ADOPTED EDITION, REGARDING FIRE PROTECTION, HEATING, VENTILATING, AND AIR CONDITIONING SYSTEMS AND ELECTRICAL SYSTEMS. ALL MATERIALS AND LABOR NECESSARY TO COMPLY WITH RULES, REGULATIONS AND ORDINANCES SHALL BE PROVIDED. WHERE THE DRAWINGS AND/OR SPECIFICATIONS INDICATE MATERIALS OR CONSTRUCTION IN EXCESS OF CODE REQUIREMENTS, THE DRAWINGS AND/OR SPECIFICATIONS SHALL GOVERN. THE CONTRACTOR SHALL HOLD THE ARCHITECT/ENGINEER FREE AND HARMLESS FROM LIABILITY OF ANY NATURE OR KIND ARISING FROM HIS FAILURE TO COMPLY WITH CODES AND ORDINANCES.

B. ALL PERMITS NECESSARY FOR PERFORMANCE OF THE WORK SHALL BE SECURED AND PAID FOR BY THE CONTRACTOR.

1.2 OPERATION AND MAINTENANCE INSTRUCTIONS:

A. THE CONTRACTOR SHALL FURNISH THE OWNER COMPLETE OPERATING AND MAINTENANCE INSTRUCTIONS COVERING ALL UNITS OF MECHANICAL EQUIPMENT HEREIN SPECIFIED TOGETHER WITH PARTS LISTS. FURNISH TWO (2) COPIES OF ALL THE LITERATURE. EACH SHALL BE SUITABLY BOUND IN LOOSE LEAF BOOK FORM.

B. COMPLETE TEMPERATURE CONTROL DIAGRAMS INCLUDING CONTROL DESCRIPTIONS AND OPERATING INSTRUCTIONS SHALL ALSO BE PROVIDED IN DUPLICATE SUITABLY BOUND IN LOOSE LEAF BOOK FORM.

1.3 RECORD DRAWINGS:

A. CONTRACTOR SHALL TURN OVER TO OWNER (1) SET OF "RECORD INCLUDE ALL DEVIATIONS FROM ORIGINAL DESIGN. DRAWING" PLANS AT PROJECT COMPLETION. THIS SET SHALL INCLUDE ALL DEVIATION FROM ORIGINAL DESIGN.

1.4 QUALIFICATIONS:

A. ALL MECHANICS SHALL BE SKILLED IN THEIR RESPECTIVE TRADES.

1.5 SUBMITTALS:

A. THE CONTRACTOR SHALL SUBMIT SEVEN (7) COPIES OF SUBMITTAL BROCHURES FOR REVIEW, SIX (6) COPIES (MAX) WILL BE RETURNED WITH APPROVAL NOTATIONS. BROCHURES SHALL BE SUBMITTED WITHIN THIRTY (30) DAYS AFTER CONTRACT AWARD.

B. COMPLETE DATA MUST BE FURNISHED SHOWING PERFORMANCE, QUALITY AND DIMENSIONS. NO EQUIPMENT OR MATERIALS SHALL BE PURCHASED PRIOR TO RECEIVING WRITTEN NOTIFICATION FROM THE ARCHITECT/ENGINEER THAT SUBMITTALS HAVE BEEN REVIEWED AND MARKED EITHER "NO EXCEPTIONS TAKEN" OR "MAKE CORRECTIONS AS NOTED". SUBMITTALS RETURNED MARKED "MAKE CORRECTIONS AS NOTED" DO NOT REQUIRE RESUBMITTAL PROVIDED THAT THE CONTRACTOR AGREES TO COMPLY WITH ALL EXCEPTIONS NOTED IN THE SUBMITTAL, AND SO STATES IN A LETTER TO THE ARCHITECT/ENGINEER.

C. REVIEW AND APPROVAL OF SUBMITTALS: SUBMITTALS WILL BE REVIEWED WITH REASONABLE PROMPTNESS, BUT ONLY FOR CONFORMANCE WITH THE DESIGN CONCEPT OF THE PROJECT AND WITH THE INFORMATION INDICATED ON THE DRAWINGS AND STATED IN THE SPECIFICATIONS. APPROVAL OF A SEPARATE ITEM AS SUCH WILL NOT INDICATE APPROVAL OF THE ASSEMBLY IN WHICH THE ITEM FUNCTIONS. APPROVAL OF SUBMITTALS SHALL NOT RELIEVE THE CONTRACTOR OF RESPONSIBILITY FOR ANY DEVIATION FROM THE REQUIREMENTS OF THE CONTRACT DOCUMENTS, NOR SHALL APPROVAL RELIEVE THE CONTRACTOR OF RESPONSIBILITY FOR THE EQUIPMENT FITTING WITHIN THE ALLOTTED SPACE SHOWN ON THE DRAWINGS WITH ALL CLEARANCES REQUIRED FOR EQUIPMENT OPERATION, SERVICE AND MAINTENANCE INCLUDING A MINIMUM OF 3 FEET CLEAR IN FRONT OF ALL ELECTRICAL CONTROL EQUIPMENT AND PANELS, FOR ERRORS OR OMISSIONS IN THE SUBMITTALS OR FOR THE ACCURACY OF DIMENSIONS AND QUANTITIES, THE ADEQUACY OF CONNECTIONS, AND THE PROPER AND ACCEPTABLE FITTING, EXECUTION, FUNCTIONING AND COMPLETION OF THE WORK.

D. USE OF APPROVED SUBSTITUTIONS DOES NOT RELIEVE THE CONTRACTOR FROM COMPLIANCE WITH THE CONTRACT DOCUMENTS. CONTRACTOR SHALL BEAR ALL EXTRA EXPENSE RESULTING FROM APPROVED SUBSTITUTIONS WHERE SUBSTITUTIONS AFFECT ADJOINING OR RELATED WORK REQUIRED IN THIS DIVISION OR OTHER DIVISIONS OF THIS SPECIFICATION.

E. UNAUTHORIZED SUBSTITUTIONS: IF SUBSTITUTE MATERIALS, EQUIPMENT OR SYSTEMS ARE INSTALLED WITHOUT PRIOR APPROVAL OR ARE INSTALLED IN A MANNER WHICH IS NOT IN CONFORMANCE WITH THE REQUIREMENT OF THIS SPECIFICATION AND FOR WHICH THE CONTRACTOR HAS NOT RECEIVED WRITTEN APPROVAL, REMOVAL OF ALL THE UNAUTHORIZED MATERIALS AND INSTALLATION OF THOSE INDICATED OR SPECIFIED SHALL BE PROVIDED AT NO EXTRA COST TO THE OWNER.

1.6 FIELD MEASUREMENTS:

A. THE CONTRACTOR SHALL VERIFY THE DIMENSIONS AND CONDITIONS GOVERNING HIS WORK AT THE BUILDING. NO EXTRA COMPENSATION SHALL BE CLAIMED OR ALLOWED ON ACCOUNT OF DIFFERENCES BETWEEN ACTUAL DIMENSIONS, INCLUDING DIMENSIONS OF EQUIPMENT, FIXTURES AND MATERIALS FURNISHED, AND THOSE INDICATED ON THE DRAWINGS. CONTRACTOR SHALL EXAMINE ADJOINING WORK, ON WHICH HIS WORK IS DEPENDENT FOR PERFECT EFFICIENCY, AND SHALL REPORT ANY WORK WHICH MUST BE CORRECTED. COORDINATION OF ALL MECHANICAL WORK WITHIN THE BUILDING WILL BE THE DIRECT RESPONSIBILITY OF THE CONTRACTOR. REVIEW OF SUBMITTAL DATA IN ACCORDANCE WITH PARAGRAPH "SUBMITTALS" SHALL IN NO MANNER RELIEVE THE CONTRACTOR OF RESPONSIBILITY FOR THE PROPER INSTALLATION OF THE MECHANICAL WORK WITHIN THE AVAILABLE SPACE. NO WAIVER OF RESPONSIBILITY FOR DEFECTIVE WORK SHALL BE CLAIMED OR ALLOWED DUE TO FAILURE TO REPORT UNFAVORABLE CONDITIONS AFFECTING HIS WORK. INSTALLATION OF EQUIPMENT AND SYSTEMS WITHIN THE BUILDING SPACE SHALL BE CAREFULLY COORDINATED BY THE CONTRACTOR WITH ALL BUILDING TRADES.

1.7 EQUIPMENT SUPPORT:

A. CONTRACTOR SHALL PROVIDE SUPPORT FOR EQUIPMENT TO THE BUILDING STRUCTURE. CONTRACTOR SHALL FURNISH ALL NECESSARY STRUCTURES, INSERTS, SLEEVES, AND HANGING DEVICES FOR INSTALLATION OF MECHANICAL AND PLUMBING EQUIPMENT, DUCTWORK AND PIPING, ETC. CONTRACTOR SHALL COMPLETELY COORDINATE INSTALLATION OF SUCH DEVICES WITH ALL TRADES AND SUB-CONTRACTORS. CONTRACTOR MUST FURTHER VERIFY WITH THE ARCHITECT THAT THE DEVICES AND SUPPORTS ARE ADEQUATE AS INTENDED AND DO NOT OVERLOAD THE BUILDING'S STRUCTURAL COMPONENTS IN ANY WAY.

PART 2 – EQUIPMENT

2.1 DIMENSIONS:

A. THE CONTRACTOR SHALL CHECK ALL DRAWINGS FURNISHED UPON THEIR RECEIPT AND SHALL PROMPTLY NOTIFY THE ARCHITECT/ENGINEER OF ANY DISCREPANCIES. THE CONTRACTOR SHALL COMPARE ALL DRAWINGS AND VERIFY ALL DIMENSIONS BOTH ON THE DRAWINGS AND IN THE FIELD BEFORE LAYING-OUT, CUTTING, AND FABRICATING THE WORK. SHEET METAL WORK THAT IS CUT AND FABRICATED FROM THE CONTRACT DRAWINGS WITHOUT DIMENSIONAL VERIFICATION WILL BE AT THE RISK OF THE CONTRACTOR.

2.2 MATERIALS

A. CONSTRUCT ALL DUCTS, CASINGS, PLENUMS, ETC. FROM GALVANIZED STEEL SHEETS. SHEETS SHALL BE FREE OF BLISTERS, SLIVERS, PITS, AND IMPERFECTLY GALVANIZED SPOTS. REINFORCING ANGLES AND BARS, AND DUCT SUPPORT MATERIALS SHALL BE GALVANIZED STEEL.

B. LOW VELOCITY DUCT CONSTRUCTION AND GAUGES: CONSTRUCT LOW VELOCITY SUPPLY AND EXHAUST DUCTS USING PITTSBURGH, OR ACME LOCK BUTTON PUNCH SNAPLOCK CORNER SEAMS. DUCT MATE JOINTS ARE ACCEPTABLE. LOW VELOCITY DUCT CONSTRUCTION IS FOR LOW PRESSURE SUPPLY, RETURN, AND EXHAUST SYSTEMS WHERE VELOCITIES DO NOT EXCEED 1,800 FEET PER MINUTE AND TOTAL PRESSURES DO NOT EXCEED 2" WATER GAUGE. DUCT CONSTRUCTION AND GAUGES FOR GALVANIZED STEEL DUCTWORK SHALL BE AS RECOMMENDED IN THE SHEET METAL AND AIR CONDITIONING CONTRACTORS NATIONAL ASSOCIATION, LOW VELOCITY SYSTEM DUCT MANUAL, TABLE 1, LATEST EDITION, FOR GALVANIZED DUCTWORK. IN ADDITION TO THE TRANSVERSE OR CONNECTION CROSS JOINTS DETAILED, ALL JOINTS SHALL BE SEALED AIRTIGHT WITH BENJAMIN FOSTER 32-14 OR 32-15 SEALANT AND THEN WRAPPED WITH ONE LAYER OF GLASSFAB REINFORCING TAPE SET IN A COATING OF THIS SEALANT. "HARDCAST" SEALING SYSTEM IS ALSO ACCEPTABLE. TAPE AND SEALANT SHALL NOT EXCEED A FLAME SPREAD OF 25 OR A SMOKE DEVELOPMENT OF 50.

2.3 TURNING VANES:

A. TURNING VANES SHALL BE INSTALLED IN ALL SQUARE ELBOWS IN LOW VELOCITY SUPPLY AND EXHAUST DUCTWORK. TURNING VANES SHALL BE HIGH EFFICIENCY PROFILE TYPE WITH SINGLE SURFACED AIR-FOIL BLADED SHAPES EQUAL TO AERO/DYNE CO., AIRSAN, ELGEN, OR APPROVED EQUAL.

B. FURNISH AIRFOIL SHAPED ACOUSTICAL TURNING VANES DESIGNED TO REDUCE THE DYNAMIC AIR LOSSES AS WELL AS THE NOISE LEVEL. TURNING VANES SHALL BE NON-CORROSIVE AND SHALL HAVE FIBERGLASS FILL WITH OPEN PROTECTIVE METAL FACING. FURNISH GALVANIZED STEEL MOUNTING RAILS WITH PREPUNCHED LOCATING HOLES ON 3-1/2" CENTERS DESIGNED TO RECEIVE THE TURNING VANES THE FULL WIDTH OR HEIGHT OF THE DUCT. ALL SQUARE ELBOWS SHOWN ON THE SUPPLY DUCTS ON THE DRAWINGS SHALL INCORPORATE ACOUSTICAL FILLED TURNING VANES.

2.4 HANGERS AND SUPPORTS:

A. HANGERS FOR DUCTS UP TO 18" IN WIDTH OR DIAMETER SHALL BE PLACED ON NOT MORE THAN 10-FOOT CENTERS. DUCTS 19" AND OVER IN WIDTH OR DIAMETER SHALL BE SUPPORTED ON NOT MORE THAN 5-FOOT CENTERS. HANGERS SHALL BE PLACED PLUMB AND PRESENT A NEAT APPEARANCE. CONSTRUCT HANGERS FOR HIGH VELOCITY BOXES AND FOR DUCTWORK FROM GALVANIZED IRON 1" X 1/16" FOR DUCTS UP TO 36" IN WIDTH OR DIAMETER. FOR DUCTS OVER 36" IN WIDTH OR DIAMETER, SUPPORT DUCTS EVERY 4'-0" WITH 1-1/4" X 1-1/4" X 1/8" ANGLES. THE USE OF PERFORATED BAND IRON FOR DUCT SUPPORT IS PROHIBITED. HANGERS SHALL EXTEND DOWN THE SIDES OF THE DUCTS USING NOT LESS THAN THREE RIVETS OR PARKER SCREWS OF APPROPRIATE SIZES. IT IS ESSENTIAL THAT ALL DUCTS BE RIGIDLY SUPPORTED. WHERE VERTICAL DUCTS PASS THROUGH FLOORS OR ROOFS, HEAVY SUPPORTING ANGLES SHALL BE ATTACHED TO DUCTS AND TO THE STRUCTURE. ANGLES SHALL BE OF SUFFICIENT SIZE TO SUPPORT THE DUCTWORK RIGIDLY. PLACE SUPPORTING ANGLES ON AT LEAST TWO SIDES OF THE DUCT.

2.5 DUCTWORK

A. ALL DUCTWORK TO BE IN ACCORDANCE WITH THE LATEST ISSUE OF THE SMACNA MANUAL ENTITLED "HVAC DUCT CONSTRUCTION STANDARDS– METAL AND FLEXIBLE". SUPPLY AND RETURN AIR DUCTWORK SHALL BE GALVANIZED METAL EXCEPT WHERE OTHERWISE INDICATED. ALL ELBOWS SHALL BE FULL INSIDE RADIUS THROAT. WHERE SQUARE ELBOWS ARE REQUIRED DUE TO CONSTRUCTION LIMITS, ELBOWS SHALL BE FITTED WITH DOUBLE- FACED TURNING VANES.

B. PROVIDE OPPOSED BLADE BALANCING DAMPERS AT EACH SUPPLY AIR CONNECTING TO MAIN DUCTS AND WHEREVER NECESSARY TO FACILITATE AIR BALANCING OF THE DUCT SYSTEM.

C. SEAL ALL DUCT PENETRATIONS THROUGH WALLS, FLOOR, AND ROOF. SEAL ALL TRANSVERSE DUCT SEAMS WITH APPROVED MASTIC. DUCT TAPES SHALL NOT BE ALLOWED FOR RIGID DUCTWORK.

D. ALL DUCTWORK SIZES SHOWN ARE FREE AREA INSIDE DIMENSIONS. ALL ROUND SUPPLY AND RETURN DUCTWORK SHALL BE INSULATED WITH FOIL FACED, LOW DENSITY DUCT WRAP. WRAP SHALL BE 2" THICK WITH A REINFORCED FOIL KRAFT VAPOR BARRIER FACING. MIN. R-6 INSTALLED. INSTALL PER MANUFACTURER'S INSTRUCTIONS. EXHAUST DUCTWORK SHALL BE UNINSULATED. DUCTWORK INTERIOR BEHIND DEVICES SHALL BE PAINTED FLAT BLACK.

E. LINE ALL RECTANGULAR DUCTWORK WITH 1" THICK, 1 1/2" DENSITY DUCT LINER. LINING SHALL BE APPLIED TO DUCTWORK WITH FIRE RESISTIVE ADHESIVES, FOSTER 85-10 OR EQUAL, AND COPPER OR CADMIUM PLATED MECHANICAL FASTENERS, GRAHAM, OMARK, OR EQUAL.

F. FLEXIBLE DUCTWORK, WHERE INDICATED ON THE DRAWINGS, SHALL BE INSULATED WITH PLASTIC VAPOR BARRIER AT INTERIOR AND EXTERIOR, STEEL WIRE COIL REINFORCED. JOINTS SHALL BE BAND-CLAMPED & TAPE SEALED TO MAINTAIN INTEGRITY OF VAPOR BARRIER. FLEXIBLE DUCT RUNS SHALL BE LIMITED TO 6 FT OF FLEX DUCT EACH RUNOUT. INSTALLATION SHALL BE SUPPORTED TO ELIMINATE SAGS. TURNS IN FLEXIBLE DUCT SHALL NOT EXCEED ONE EQUIVALENT FULL-RADIUS ELBOW PER 6 FT RUNOUT.

2.6 PACKAGED ROOFTOP UNITS

A. GENERAL

ALL UNITS SHALL BE FACTORY ASSEMBLED, PIPED, INTERNALLY WIRED AND FULLY CHARGED WITH R-22. ALL UNITS SHALL BE DESIGNED TO OPERATE AT OUTDOOR AMBIENT TEMPERATURES AS HIGH AS 115 F. COOLING CAPACITIES SHALL BE RATED IN ACCORDANCE WITH A.R.I. STANDARDS. HEATING/COOLING UNIT DESIGN SHALL BE CERTIFIED BY THE AMERICAN GAS ASSOCIATION (A.G.A.) OR CANADIAN STANDARDS ASSOCIATION (C.S.A.) SPECIFICALLY FOR OUTDOOR APPLICATIONS USING PROPANE OR NATURAL GAS. ALL UNITS SHALL BE DESIGNED FOR OUTDOOR ROOFTOP OR GROUND LEVEL INSTALLATION. EXTERIOR SURFACES OF ALL UNITS SHALL BE PHOSPHATIZED, ZINC-COATED STEEL WITH EPOXY RESIN PRIMER AND BAKED ENAMEL FINISH.

B. CASING

ALL PANELS SHALL BE 18-GAUGE STEEL, GASKETED AND INSULATED. FOIL-FACED GLASS FIBER INSULATION SHALL BE IN THE HEAT EXCHANGER SECTION. MAT-FACED INSULATION SHALL BE IN THE EVAPORATOR SECTION. BASE PAN AND MOUNTING RAILS SHALL BE 18 GAUGE.

C. CONTROLS

REFRIGERATION CYCLE CONTROLS SHALL INCLUDE CONDENSER FAN, EVAPORATOR FAN AND COMPRESSOR CONTACTORS. COMPRESSOR SHALL BE EQUIPPED WITH A COMBINATION INTERNAL WINDING THERMOSTAT/CURRENT OVERLOAD. INTERNAL HIGH PRESSURE RELIEF SHALL ALSO BE PROVIDED.

D. FANS

INDOOR BLOWER FAN TO BE FORWARD CURVED, CENTRIFUGAL-TYPE WITH MULTIPLE SPEED DIRECT DRIVE MOTOR. OUTDOOR FAN TO BE STATICALLY AND DYNAMICALLY BALANCED, DIRECT DRIVE WITH DRAW THROUGH CONFIGURATION. FAN MOTORS MUST BE PERMANENTLY LUBRICATED WITH BUILT-IN OVERLOAD PROTECTION.

E. COMPRESSOR

THE COMPRESSOR SHALL BE HERMETICALLY SEALED, HIGH EFFICIENCY, WITH INTERNAL VIBRATION ISOLATION AND CRANKCASE HEATERS.

F. COILS

INDOOR AND OUTDOOR COILS WITH ALUMINUM PLATE FINS MECHANICALLY BONDED TO SEAMLESS COPPER TUBES.

G. GAS HEATERS

GAS-FIRED HEATING SECTION TO BE COMPLETELY ASSEMBLED, INTERNALLY WIRED, AND PIPED FOR OUTDOOR APPLICATION. PROVIDE WITH ELECTRONIC IGNITION SYSTEM WITH FLAME SENSORS TO ENSURE SPARK, AND FORCED COMBUSTION BLOWER FOR FLAME STABILITY. HEAT EXCHANGER TO BE ALUMINIZED STEEL TUBES. BURNERS TO BE ALUMINIZED STEEL, MULTI-PORT INSHOT.

PART 3 – EXECUTION

3.1 THE CONTRACTOR SHALL GUARANTEE ALL MATERIALS, EQUIPMENT, AND WORKMANSHIP FROM DEFECT OF MATERIAL AND WORKMANSHIP FOR A PERIOD OF ONE YEAR FROM ACCEPTANCE WITHOUT ADDITIONAL COST TO THE OWNER.

3.2 PROVIDE INDEPENDENT AIR BALANCE AND FINAL REPORT AT CONTRACTOR'S EXPENSE. AIR BALANCE SHALL BE PERFORMED BY A CERTIFIED AIR BALANCE COMPANY. BALANCE ALL EQUIPMENT, DIFFUSERS, AND GRILLES TO OBTAIN THE AIR QUANTITIES AS SHOWN ON PLANS. CONTRACTOR SHALL PROVIDE (5) FIVE BOUND COPIES OF A CERTIFIED TEST AND BALANCE REPORT WITH FORMS CONTAINING INFORMATION INDICATED IN SCHEDULES. SUBMIT REPORT TO ARCHITECT/ENGINEER FOR REVIEW PRIOR TO PROJECT CLOSEOUT.

3.3 PROVIDE ALL REQUIRED AUTOMATIC TEMPERATURE CONTROLS WIRING, CONDUIT, PNEUMATIC TUBING, ETC... REQUIRED FOR SYSTEM OPERATION.

07-19993
Clark County Dev. Services
Building Services Division
AUG 06 2007 DL
Reviewed and Accepted
Wilidan

ENERGY CONSERVATION MEASURES PER 2003 IECC

1. PROVIDE MINIMUM DUCT INSULATION PER 803.2.8:
   - R5 FOR ALL DUCTS IN THE ATTIC SPACE
   - R8 FOR ALL DUCTS OUTSIDE OF THE BUILDING
   - WHEN LOCATED WITHIN THE BUILDING ENVELOPE, THE DUCTS & PLENUMS SHALL BE SEPARATED FROM THE BUILDING EXTERIOR BY MIN R-8 INSULATION.
2. ALL LONGITUDINAL AND TRANSVERSE JOINTS, SEAMS AND CONNECTIONS IN DUCTWORK, SHALL BE SECURELY FASTENED AND SEALED WITH WELDS, GASKETS, MASTICS (ADHESIVES), MASTI-PLUS-EMBEDED-FABRIC SYSTEMS OR TAPES INSTALLED PER MANUFACTURER'S INSTRUCTIONS, PER 803.2.8.1 ACCORDING TO THE PRESSURE CLASSIFICATION.
3. BOTH OUTDOOR AIR SUPPLY AND EXHAUST DUCTS SHALL BE EQUIPPED WITH GRAVITY OR MOTORIZED DAMPERS THAT WILL AUTOMATICALLY SHUT WHEN SYSTEMS ARE NOT IN OPERATION PER 803.3.8.1.
4. THE HVAC SYSTEM SHALL BE PROVIDED WITH BRANCH DUCT BALANCING DAMPERS PER 803.3.8.1.
5. REFRIGERANT PIPING SHALL BE INSULATED WITH 1" PIPE INSULATION PER TABLE 803.7.

GENERAL NOTES

1. FIELD VERIFY ALL DIMENSIONS AND CLEARANCES PRIOR TO PURCHASING ANY EQUIPMENT OR FABRICATING ANY DUCTWORK.
2. MAINTAIN MINIMUM 10' CLEARANCE BETWEEN ANY OUTSIDE AIR INTAKE AND EXHAUST, PLUMBING VENT AND FLUE TERMINATIONS.
3. COORDINATE EXACT LOCATION OF THERMOSTATS WITH ARCHITECT PRIOR TO INSTALLATION. PROVIDE INSULATED SUB-BASE FOR THERMOSTATS ON EXTERIOR WALLS.
4. COORDINATE LOCATION OF ALL ROOF MOUNTED EQUIPMENT AND PENETRATIONS WITH ARCHITECT AND STRUCTURAL ENGINEER.
5. COORDINATE ROUTING OF DUCTWORK AND PIPING WITH STRUCTURAL ENGINEER AND ALL OTHER TRADES.
6. PAINT ALL EXPOSED DUCTWORK AS DIRECTED BY ARCHITECT.
7. PROVIDE ALL BRACING AND SUPPORT OF EQUIPMENT AS REQUIRED BY CODE AND EQUIPMENT MANUFACTURER'S RECOMMENDATIONS.
8. ALL CONDENSATE DRAIN PIPING TO BE INSTALLED BY THE PLUMBING CONTRACTOR.
9. DUCT MOUNTED IONIZATION TYPE SMOKE DETECTOR, AS INDICATED ON PLANS, IN S/A DUCT WITHIN 10' OF UNIT AND BEFORE ANY BRANCH TAKE-OFF. DETECTORS SHALL BE WIRED SUCH THAT UPON DETECTION OF SMOKE IN ANY UNIT, ALL UNITS SHALL AUTOMATICALLY SHUT DOWN. DUCT DETECTION SHALL BE FURNISHED AND INSTALLED BY THE MECHANICAL CONTRACTOR AND WIRED BY THE ELECTRICAL CONTRACTOR. DUCT DETECTOR SHALL BE PERFORMANCE TESTED ACCORDING TO CLARK COUNTY REQUIREMENTS, UMC 609. 1

SHEET INDEX

SHEET NO.	DESCRIPTION	PERMIT SET - 4/18/07	6/12/07	1	2	3	4	5	6	7	8	9	10	11	12	13	14	15
	MECHANICAL																	
M-0	MECHANICAL LEGEND AND SPECIFICATIONS	●	●															
M-0.1	MODEL ENERGY COMPLIANCE CODE	●																
M-1	MECHANICAL NOTES AND SCHEDULES	●																
M-2	MECHANICAL FLOOR PLAN	●	●															
M-3	MECHANICAL ROOF PLAN AND DETAILS	●	●															
M-4	WIRING DIAGRAM AND HOOD DIAGRAM	●																

THIS DRAWING IS AN INSTRUMENT OF SERVICE BETWEEN THE ARCHITECT AND HIS CLIENT, BUT REMAINS THE PROPERTY OF THE ARCHITECT.
© ALL RIGHTS RESERVED 2005

architecture/engineering/site
GARY GUY WILSON
7625 South Industrial Road, Suite#100
Las Vegas, Nevada 89139

planning/interior design
AIA STUDIOS...
(702)876-0668
professional corp / certified n.c.a.r.b.
4175 South Riley Street
Suite 200
Las Vegas, NV 89147
Tel: 702.873.3009
Fax: 702.873.3036
www.shnevada.com
MEP: SH NEVADA

CONSULTANTS:
CIVIL: CIVILWORKS, INC.
STRUCTL: WRIGHT ENGINEERS

CARL'S JR RESTAURANT
@ RUSSELL ROAD & EASTERN AVE.
McCARRAN MARKETPLACE
FOR: S.L. INVESTMENTS, MR. STEVE LARSON
CLARK COUNTY, NEVADA

MECHANICAL LEGEND AND SPECIFICATIONS

PROJ.NO.	13520701.00
PROJ.ARCH.	G.G.WILSON,AIA
PROJ.MGR.	MVM
JOB CAPT.	MVM
TECH'N	
ARCH.CHK.	GGW
PH-2/3	02FEB07
PH-4	30MAR07
PH-5	02MAY07

REVISIONS
1 6/12/07 BLDG DEPT COMMENTS

PRINTS REQUIRE ARCHITECT'S SEAL & SIGN. FOR PROOF OF VALIDITY

PROFESSIONAL ENGINEER - STATE OF NEVADA
ALEXANDER JANKOVIC
Exp: 6/30/09
MECHANICAL
No. 13957
6/28/07

LV070018

SHT.NO. M-0

P:\PR13\07\0518SMECH\V-0_General.dwg, 6/28/2007 11:28:03 AM, lpreciado

COM*check* Software Version 3.3.0

Envelope Compliance Certificate

2003 IECC

Report Date: 03/19/07
Data filename: P:\PRJ\LV070018\ME2E8F~1.CI\CARL'S~2.CCK

Section 1: Project Information

Project Title: Carl's Jr. Restaurant

Construction Site:	Owner/Agent:	Designer/Contractor:
@ Russell Road & Eastern Ave Las Vegas, NV	Gary Guy Wilson 7625 South Industrial Rd, Suite 100 Las Vegas, NV 89139 (702) 876-0668	Tony Ganzon SH Nevada 4175 South Riley St., Suite 200 Las Vegas, NV 89147 (702) 873-0670

Section 2: General Information

Building Location (for weather data):	**Las Vegas, Nevada**
Climate Zone:	**5b**
Heating Degree Days (base 65 degrees F):	**2652**
Cooling Degree Days (base 65 degrees F):	**2691**
Project Type:	**New Construction**
Vertical Glazing / Wall Area Pct.:	**12%**

Building Type	Floor Area
Restaurant	3198

Section 3: Requirements Checklist

Envelope PASSES (Design: 12% Limit: maximum)

Climate-Specific Requirements:

Component Name/Description	Gross Area or Perimeter	Cavity R-Value	Cont. R-Value	Proposed U-Factor	Budget U-Factor
Roof 1: All-Wood Joist/Rafter/Truss	3100	30.0	0.0	0.035	0.054
Exterior Wall 1: Wood Frame, Any Spacing	3133	13.0	0.0	0.091	0.156
Window 1: Metal Frame:Double Pane, Clear, SHGC 0.85	297	---	---	0.620	1.230
Door 1: Glass, Clear, SHGC 0.85	71	---	---	0.620	1.230
Door 2: Solid	32	---	---	0.330	0.245

(a) Budget U-factors are used for software baseline calculations ONLY, and are not code requirements.

Air Leakage, Component Certification, and Vapor Retarder Requirements:

- ☐ 1. All joints and penetrations are caulked, gasketed or covered with a moisture vapor-permeable wrapping material installed in accordance with the manufacturer's installation instructions.
- ☐ 2. Windows, doors, and skylights certified as meeting leakage requirements.
- ☐ 3. Component R-values & U-factors labeled as certified.
- ☐ 4. Insulation installed according to manufacturer's instructions, in substantial contact with the surface being insulated, and in a manner that achieves the rated R-value without compressing the insulation.
- ☐ 5. Stair, elevator shaft vents, and other dampers integral to the building envelope are equipped with motorized dampers.
- ☐ 6. Cargo doors and loading dock doors are weather sealed.
- ☐ 7. Recessed lighting fixtures are: (i) Type IC rated and sealed or gasketed; or (ii) installed inside an appropriate air-tight assembly with a 0.5 inch clearance from combustible materials and with 3 inches clearance from insulation material

- ☐ 8. Building entrance doors have a vestibule and equipped with closing devices.

Exceptions:

Building entrances with revolving doors.

Doors that open directly from a space less than 3000 sq. ft. in area.

Note: Vapor retarder not required in this location.

Section 4: Compliance Statement

Compliance Statement: The proposed envelope design represented in this document is consistent with the building plans, specifications and other calculations submitted with this permit application. The proposed envelope system has been designed to meet the 2003 IECC requirements in COMcheck Version 3.3.0 and to comply with the mandatory requirements in the Requirements Checklist.

Name - Title _____ Signature _____ Date _____

COM*check* Software Version 3.3.0

Mechanical Compliance Certificate

2003 IECC

Report Date: 03/19/07
Data filename: P:\PRJ\LV070018\ME2E8F~1.CI\CARL'S~2.CCK

Section 1: Project Information

Project Title: Carl's Jr. Restaurant

Construction Site:	Owner/Agent:	Designer/Contractor:
@ Russell Road & Eastern Ave Las Vegas, NV	Gary Guy Wilson 7625 South Industrial Rd, Suite 100 Las Vegas, NV 89139 (702) 876-0668	Tony Ganzon SH Nevada 4175 South Riley St., Suite 200 Las Vegas, NV 89147 (702) 873-0670

Section 2: General Information

Building Location (for weather data):	**Las Vegas, Nevada**
Climate Zone:	**5b**
Heating Degree Days (base 65 degrees F):	**2652**
Cooling Degree Days (base 65 degrees F):	**2691**
Project Type:	**New Construction**

Section 3: Mechanical Systems List

Quantity	System Type & Description
1	HVAC System 1: Heating: Other, Gas / Cooling: Rooftop Package Unit, Capacity >=90 - <135 kBtu/h, Air-Cooled Condenser / Single Zone
1	HVAC System 2: Heating: Other, Gas / Cooling: Rooftop Package Unit, Capacity >=135 - <240 kBtu/h, Air-Cooled Condenser / Single Zone
1	Storage Water Heater 1: Service Water Heater w/ Circulation Pump

Section 4: Requirements Checklist

Requirements Specific To: HVAC System 1 :

- ☐ 1. Equipment minimum efficiency: Rooftop Package Unit: 10.1 EER

Requirements Specific To: HVAC System 2 :

- ☐ 1. Equipment minimum efficiency: Rooftop Package Unit: 9.5 EER
- ☐ 2. Integrated air economizer required

Requirements Specific To: Storage Water Heater 1 :

- ☐ 1. 1-in. pipe insulation on circulation systems
- ☐ 2. Automatic on/off control required for circulating systems
- ☐ 3. Gas Storage Water Heater efficiency >= 0.48 EF

Generic Requirements: Must be met by all systems to which the requirement is applicable:

- ☐ 1. Load calculations per 2001 ASHRAE Fundamentals
- ☐ 2. Plant equipment and system capacity no greater than needed to meet loads
  - Exception: Standby equipment automatically off when primary system is operating
  - Exception: Multiple units controlled to sequence operation as a function of load

- ☐ 3. Minimum one temperature control device per system
- ☐ 4. Minimum one humidity control device per installed humidification/dehumidification system
- ☐ 5. Thermostatic controls has 5 degrees F deadband
  - Exception: Thermostats requiring manual changeover between heating and cooling
- ☐ 6. Automatic Controls: Setback to 55 degrees F (heat) and 85 degrees F (cool); 7-day clock; 2-hour occupant override, 10-hour backup
  - Exception: Continuously operating zones
  - Exception: 2 kW demand or less, submit calculations
- ☐ 7. Automatic shut-off dampers on exhaust systems and supply systems with airflow >3,000 cfm
- ☐ 8. Outside-air source for ventilation; system capable of reducing OSA to required minimum
- ☐ 9. R-5 supply and return air duct insulation in unconditioned spaces R-8 supply and return air duct insulation outside the building R-8 insulation between ducts and the building exterior when ducts are part of a building assembly
  - Exception: Ducts located within equipment
  - Exception: Ducts with interior and exterior temperature difference not exceeding 15 degrees F.
- ☐ 10. Ducts sealed - longitudinal seams on rigid ducts; transverse seams on all ducts; UL 181A or 181B tapes and mastics
  - Exception: Continuously welded and locking-type longitudinal joints and seams on ducts operating at static pressures less than 2 inches w.g. pressure classification
- ☐ 11. Mechanical fasteners and sealants used to connect ducts and air distribution equipment
- ☐ 12. Operation and maintenance manual provided to building owner
- ☐ 13. Balancing devices provided in accordance with IMC 603.15
- ☐ 14. Newly purchased service water heating equipment meets the efficiency requirements
- ☐ 15. Water heater temperature controls: 110 degrees F for dwelling units or 90 degrees F for other occupancies
- ☐ 16. Stair and elevator shaft vents are equipped with motorized dampers

Section 5: Compliance Statement

Compliance Statement: The proposed mechanical design represented in this document is consistent with the building plans, specifications and other calculations submitted with this permit application. The proposed mechanical systems have been designed to meet the 2003 IECC requirements in COMcheck Version 3.3.0 and to comply with the mandatory requirements in the Requirements Checklist.

Name - Title _____ Signature _____ Date _____

COM*check* Software Version 3.3.0

Mechanical Requirements Description

2003 IECC

Report Date:
Data filename: P:\PRJ\LV070018\ME2E8F~1.CI\CARL'S~2.CCK

The following list provides more detailed descriptions of the requirements in Section 4 of the Mechanical Compliance Certificate.

Requirements Specific To: HVAC System 1 :

1. The specified heating and/or cooling equipment is covered by ASHRAE 90.1 Code and must meet the following minimum efficiency: Rooftop Package Unit: 10.1 EER

Requirements Specific To: HVAC System 2 :

1. The specified heating and/or cooling equipment is covered by ASHRAE 90.1 Code and must meet the following minimum efficiency: Rooftop Package Unit: 9.5 EER
2. An integrated air economizer is required for individual cooling systems over 65 kBtu/h in the selected climate. An integrated economizer allows simultaneous operation of outdoor-air and mechanical cooling.

Requirements Specific To: Storage Water Heater 1 :

1. Piping for the specified circulating service hot water system must be insulated with a minimum of 1-in. insulation having a conductivity no >0.28 Btu-in/(h-ft2-degrees F).
2. Circulating service hot water systems must have a time switch control that can automatically turn off the system during unoccupied hours.
3. Service water heating equipment used solely for heating potable water, pool heaters, and hot water storage tanks must meet the following minimum efficiency. Gas Storage Water Heater efficiency >= 0.48 EF

Generic Requirements: Must be met by all systems to which the requirement is applicable:

1. Design heating and cooling loads for the building must be determined using procedures in the ASHRAE Handbook of Fundamentals or an approved equivalent calculation procedure.
2. All equipment and systems must be sized to be no greater than needed to meet calculated loads. A single piece of equipment providing both heating and cooling must satisfy this provision for one function with the capacity for the other function as small as possible, within available equipment options.
   - Exception: The equipment and/or system capacity may be greater than calculated loads for standby purposes. Standby equipment must be automatically controlled to be off when the primary equipment and/or system is operating.
   - Exception: Multiple units of the same equipment type whose combined capacities exceed the calculated load are allowed if they are provided with controls to sequence operation of the units as the load increases or decreases.
3. Each heating or cooling system serving a single zone must have its own temperature control device.
4. Each humidification system must have its own humidity control device.
5. Thermostats controlling both heating and cooling must be capable of maintaining a 5 degrees F deadband (a range of temperature where no heating or cooling is provided).
   - Exception: Deadband capability is not required if the thermostat does not have automatic changeover capability between heating and cooling.
6. The system or zone control must be a programmable thermostat or other automatic control meeting the following criteria:a) capable of setting back temperature to 55 degrees F during heating and setting up to 85 degrees F during coolingb) capable of automatically setting back or shutting down systems during unoccupied hours using 7 different day schedulesc) have an accessible 2-hour occupant overridd) have a battery back-up capable of maintaining programmed settings for at least 10 hours without power.
   - Exception: A setback or shutoff control is not required on thermostats that control systems serving areas that operate continuously.
   - Exception: A setback or shutoff control is not required on systems with total energy demand of 2 kW (6,826 Btu/h) or less.
7. Outdoor-air supply systems with design airflow rates >3,000 cfm of outdoor air and all exhaust systems must have dampers that are automatically closed while the equipment is not operating.
8. The system must supply outside ventilation air as required by Chapter 4 of the International Mechanical Code. If the ventilation system is designed to supply outdoor-air quantities exceeding minimum required levels, the system must be capable of reducing outdoor-air flow to the minimum required levels.

9. Air ducts must be insulated to the following levels:a) Supply and return air ducts for conditioned air located in unconditioned spaces (spaces neither heated nor cooled) must be insulated with a minimum of R-5. Unconditioned spaces include attics, crawl spaces, unheated basements, and unheated garages.b) Supply and return air ducts and plenums must be insulated to a minimum of R-8 when located outside the building.c) When ducts are located within exterior components (e.g., floors or roofs), minimum R-8 insulation is required only between the duct and the building exterior
   - Exception: Duct insulation is not required on ducts located within equipment.
   - Exception: Duct insulation is not required when the design temperature difference between the interior and exterior of the duct or plenum does not exceed 15 degrees F.
10. All joints, longitudinal and transverse seams, and connections in ductwork must be securely sealed using weldments; mechanical fasteners with seals, gaskets, or mastics; mesh and mastic sealing systems; or tapes. Tapes and mastics must be listed and labeled in accordance with UL 181A or UL 181B.
    - Exception: Continuously welded and locking-type longitudinal joints and seams on ducts operating at static pressures less than 2 inches w.g. pressure classification.
11. Mechanical fasteners and seals, mastics, or gaskets must be used when connecting ducts to fans and other air distribution equipment, including multiple-zone terminal units
12. Operation and maintenance documentation must be provided to the owner that includes at least the following information:a) equipment capacity (input and output) and required maintenance actionsb) equipment operation and maintenance manualsc) HVAC system control maintenance and calibration information, including wiring diagrams, schematics, and control sequence descriptions; desired or field-determined set points must be permanently recorded on control drawings, at control devices, or, for digital control systems, in programming commentsd) complete narrative of how each system is intended to operate.
13. Each supply air outlet or diffuser and each zone terminal device (such as VAV or mixing box) must have its own balancing device Acceptable balancing devices include adjustable dampers located within the ductwork, terminal devices, and supply air diffusers.
14. Service water heating equipment must meet minimum Federal efficiency requirements included in the National Appliance Energy Conservation Act and the Energy Policy Act of 1992, which meet or exceed ASHRAE 90.1 Code. New service water heating equipment can be assumed to meet these requirements.
15. Water-heating equipment must be provided with controls that allow the user to set the water temperature to 110 degrees F for dwelling units and 90 degrees F for other occupancies. Controls must limit output temperatures of lavatories in public facility restrooms to 110 degrees F.
16. Stair and elevator shaft vents must be equipped with motorized dampers capable of being automatically closed during normal building operation and interlocked to open as required by fire and smoke detection systems. All gravity outdoor air supply and exhaust hoods, vents, and ventilators must be equipped with motorized dampers that will automatically shut when the spaces served are not in use. Exceptions: - Gravity (non-motorized) dampers are acceptable in buildings less than three stories in height above grade. - Ventilation systems serving unconditioned spaces.

07-19993
Clark County Dev. Services
Building Services Division
AUG 06 2007 DL
Reviewed and Accepted
Wilidan

THIS DRAWING IS AN INSTRUMENT OF SERVICE BETWEEN THE ARCHITECT AND HIS CLIENT, BUT REMAINS THE PROPERTY OF THE ARCHITECT.
© ALL RIGHTS RESERVED 2005

architecture/engineering/site planning/interior design
GARY GUY WILSON AIA STUDIOS...
7625 South Industrial Road, Suite#100
Las Vegas, Nevada 89139
(702)876-0668
professional corp / certified n.c.a.r.b.

MEP: SH NEVADA
4175 South Riley Street
Suite 200
Las Vegas, NV 89147
Tel: 702.873.0670
Fax: 702.873.0088
www.shnevada.com

CONSULTANTS:
CIVIL: CIVILWORKS, INC.
STRUCTL: WRIGHT ENGINEERS

CARL'S JR RESTAURANT
@ RUSSELL ROAD & EASTERN AVE.
McCARRAN MARKETPLACE
FOR: S.L. INVESTMENTS, MR. STEVE LARSON
CLARK COUNTY, NEVADA

PROJ.NO.	13520701.00
PROJ.ARCH.	G.G.WILSON,AIA
PROJ.MGR.	MVM
JOB CAPT.	MVM
TECH'N	
ARCH.CHK.	GGW
PH-2/3	02FEB07
PH-4	30MAR07
PH-5	02MAY07

REVISIONS

PRINTS REQUIRE ARCHITECT'S SEAL & SIGN. FOR PROOF OF VALIDITY

PROFESSIONAL ENGINEER - STATE OF NEVADA
ALEXANDAR JANKOVIC
EXPIRES 06/30/07
MECHANICAL
No. 13957
4/18/07

LV070018

MODEL ENERGY COMPLIANCE CODE

SHT.NO. M-0.1

P:\PRJ\LV070018\MECH\M-01_MEC.dwg, 4/18/2007 9:26:18 AM, lpenso

GAS/ELECTRIC AIR CONDITIONING UNIT SCHEDULE

DESIG-NATION	MFR.	MODEL	C.F.M.	OSA CFM	EXT. S.P.	COOLING MBH @ ARI CONDITIONS	HEATING BTUH GAS INPUT	HEATING BTUH GAS OUTPUT	ELECTRICAL COMP FLA	UNIT MCA	H.P.	VOLT	PH	FUSE SIZE	OPER WT. lbs.	EER	ACCESSORIES
AC 1	YORK	DH120N10B2GAAIA	3000	1300	0.4	91	180,000	144,000	16.0	63.9	3	208	3	70	1500	11.5	FACTORY CURB / ECONOMIZER SMOKE DETECTORS
AC 2	YORK	DH150N10B2GAAIA	5000	1800	0.8	145	245,000	198,000	18.9	75.6	5	208	3	90	1600	10.0	FACTORY CURB / ECONOMIZER SMOKE DETECTORS

EXHAUST FAN SCHEDULE

DESIG-NATION	MFR.	MODEL	CFM	EXT. S.P.	SERVING	ELECTRIC BHP	H.P.	VOLT	PH	OPER WT. lbs.	REMARKS
EF 1	LAU INDUSTRIES SUPREME FAN	GBD-125	950	.75"	BROILER HOOD H-1	0.39	1.0	208	3	350	HINGE KIT, U.L. 762 LISTED FOR GREASE. WEATHER PROOF GREASE RECEPTACLE
EF 2	LAU INDUSTRIES SUPREME FAN	GBD-125	1600	.75"	FRYER HOOD H-2	0.81	1.0	208	3	350	HINGE KIT, U.L. 762 LISTED FOR GREASE. WEATHER PROOF GREASE RECEPTACLE
EF 3	LAU INDUSTRIES SUPREME FAN	GBD-125	1575	.75"	GRIDDLE HOOD H-2	0.78	1.0	208	3	350	HINGE KIT, U.L. 762 LISTED FOR GREASE. WEATHER PROOF GREASE RECEPTACLE
EF 4	VENTILATION, INC PENN FAN	DX-10R	500	.25"	CREW RM. TOILET RMS.	–	1/4	120	1	30	W/ BACKDRAFT DAMPER

FLY FAN SCHEDULE

DESIG-NATION	MFR.	MODEL	C.F.M.	SERVING	ELECTRIC H.P.	VOLT	PH	OPER WT. lbs.	REMARKS
FF 1	MARS	48 CH	2550	BACK DOOR	1/4	120	1	63	MICRO SWITCH & SURFACE MOUNTED CAB.
FF 2	MARS	W 25	1900	DRIVE THRU WINDOW	100 W	120	1	20	MICRO SWITCH & SURFACE MOUNTED CAB.

KITCHEN VENTILATION HOOD SCHEDULE

DESIG-NATION	MFR.	SERVING	MODEL NO.	SIZE	EXH. C.F.M.	EXH. DUCT SIZE	EXH. VEL FPM	FLAMEGARD FILTERS	MAKE-UP AIR C.F.M.	REMARKS
H 1	RANDELL	BROILER	VBC48043STD	4'-0" x 3'-3"	950	9"x9"	1689	(6) 10"x16"	N/A	U.L. LISTED # MH26772
H 2	RANDELL	FRYER	VIS54078S	6'-6" x 4'-6"	1600	12"x12"	1600	(1) 20"x16" (3) 20"x20"	1210	U.L. LISTED # MH18450
H 3	RANDELL	GRIDDLE	VIS54084S	7'-0" x 4'-6"	1575	12"x12"	1575	(4) 20"x16" (1) 20"x20"	1340	U.L. LISTED # MH18450

MAKE UP AIR UNIT SCHEDULE

DESIG-NATION	MFR.	MODEL	CFM	EXT. S.P.	SERVING	ELECTRIC BHP	H.P.	VOLT	PH	OPER WT. lbs.	REMARKS
MUA 1	SUPREME CABINET SUPPLY FAN	SF-1212	2250	0.50	GRIDDLE & FRYER HOODS	0.625	1.5	208	3	250	INTERLOCK WITH EF-2 & EF-3.

GENERAL NOTES

I. SCOPE OF WORK

FURNISH AND INSTALL THE AIR CONDITIONING SYSTEMS WHICH INCLUDE BUT ARE NOT LIMITED TO AIR CONDITIONING UNITS, HEATING UNITS, MAKE-UP AIR AND VENTILATION SYSTEMS, DUCTWORK, DIFFUSERS, REGISTERS, GRILLES, INSULATION, CONTROLS AND THE BALANCING OF ALL FURNISHED SYSTEMS. THE FINAL PRODUCT SHALL BE A COMPLETE WORKING SYSTEM.

II. SUPERVISION OF CONTINGENT CONSTRUCTION.

A. INSPECT THE MATERIALS AND WORKMANSHIP OF THOSE TRADES WHOSE WORK WILL AFFECT THE INSTALLATION AND/OR THE OPERATION OF THE SYSTEMS. INSPECTION REPORTS WILL BE FORWARDED TO THE OWNER FOR THEIR FOLLOW-UP.

B. SPECIFIC TRADES SUBJECT TO INSPECTION, WHERE APPLICABLE, ARE:

(1) PLUMBING – FINAL CONNECTIONS OF ALL PIPING TO A/C EQUIPMENT AND/OR SYSTEMS.

(2) ELECTRICAL – FINAL CONNECTIONS OF ALL LINE VOLTAGE WIRING AND ALL LINE AND LOW VOLTAGE CONDUIT TO A/C EQUIPMENT AND/OR SYSTEMS.

(3) FRAMING – OPENINGS, CURBS, AND FLASHINGS FOR A/C EQUIPMENT AND/OR SYSTEMS.

A. MATERIALS AND WORKMANSHIP

(1) GENERAL – IN CONFORMITY WITH PLANS AND SPECIFICATIONS, LOCAL BUILDING CODES, AND ALL LEGALLY CONSTITUTED PUBLIC AUTHORITIES HAVING JURISDICTION.

(2) APPLICABLE SPECIFICATIONS AND STANDARDS – MATERIALS AND WORKMANSHIP SPECIFIED TO BE IN ACCORDANCE WITH THE LATEST APPLICABLE FEDERAL N.F.P.A., A.S.A., A.S.M.E., A.S.T.M., A.G.A., AND S.M.A.C.N.A. STANDARDS OR SPECIFICATIONS.

B. PERMITS, LICENSES, PLAN CHECK, FEES, AND INSPECTIONS TO BE OBTAINED AND PAID FOR AS REQUIRED.

C. PROTECTION.
PROVIDE FOR THE SAFETY AND GOOD CONDITION OF ALL MATERIALS, EQUIPMENT AND ACCESSORY ITEMS.

D. LOCATION OF DUCTWORK AND EQUIPMENT.

(1) INSTALL AS REQUIRED FOR PROPER INSTALLATION IN AVAILABLE SPACE AVOIDING INTERFERENCE WITH ARCHITECTURAL AND STRUCTURAL MEMBERS AND WORK OF OTHER TRADES.

(2) PRESERVE HEADROOM AND KEEP OPENINGS AND PASSAGEWAYS CLEAR.

(3) INSTALL DUCTS AS SHOWN IN A NEAT MANNER, SYMMETRICAL WITH BUILDING LINES, LIGHTS, ACOUSTICAL TILE PATTERN, ETC.

(4) DRAWINGS ARE DIAGRAMMATIC AND APPROXIMATE AND ARE SUBJECT TO REARRANGEMENT FOR PROPER INSTALLATION. CERTAIN RUNS OF DUCTWORK AND PIPING SHOWN DISTORTED TO AVOID CONFUSION.

E. ACCESS TO DUCTS AND CONCEALED EQUIPMENT.
PROVIDE ACCESS DOOR OR PANEL REQUIRED IN CEILING OR WALLS FOR ACCESS TO ALL CONCEALED DAMPERS, CONTROLLERS, ETC.

F. CLEANING OF PREMISES.
REMOVAL OF SCRAPS AND INSTALLATION RELATED DEBRIS FROM AREA. LEAVE ENTIRE INSTALLATION IN A NEAT, CLEAN AND USABLE CONDITION.

G. HOISTING AND SETTING IN PLACE.
HOISTING AND SETTING IN PLACE OF ALL FURNISHED HEATING, AIR CONDITIONING, EXHAUST AND MAKEUP AIR EQUIPMENT.

H. EQUIPMENT.
TYPE AND SIZE AS SHOWN AND DESCRIBED ON THE DRAWINGS.

I. SHEET METAL WORK.

(1) GAUGE AND CONSTRUCTION: GALVANIZED SHEET METAL IN ACCORDANCE WITH RECOMMENDATIONS OF THE LATEST EDITION OF S.M.A.C.N.A. AND TO COMPLY WITH ALL NATIONAL AND LOCAL CODE REQUIREMENTS.

(2) GREASE EXHAUST DUCTWORK: GALVANIZED SHEET METAL GAUGE AS INDICATED ON THE DRAWINGS SHALL BE WELDED AND INSTALLED PER N.F.P.A. 96 REQUIREMENTS.

(3) DUCT SEALING: ALL DUCT JOINTS AND SEAMS EXPOSED ON ROOF SHALL BE SEALED TO INSURE WEATHER TIGHTNESS WITH GLENKOTE SEAL/FLEX DUCT SEALANT APPLIED IN ACCORDANCE WITH MANUFACTURER'S RECOMMENDATIONS. NO SUBSTITUTIONS ALLOWED. (MANUFACTURER: GLENKOTE MANUFACTURING CO., 1001 GLENDALE BLVD. LOS ANGELES, CALIFORNIA 90026

(4) PAINTING: ALL DUCTWORK VISIBLE THROUGH OPENINGS SHALL BE PAINTED FLAT BLACK.

(5) FLEXIBLE DUCT: FLEXMASTER TRIPLE LOCK ALUMINUM DUCTING (MO. NO. TL-V) WITH R-6 INSULATION OR EQUAL.

(6) MATERIAL: PRE-INSULATED FLEXIBLE FIBER- GLASS AIR DUCT, ENCASED IN A VAPOR BARRIER JACKET, K FACTOR OF 0.24 AT 75 DEGREES, MEET REQUIREMENTS OF N.F.P.A. 90A FOR AIR DUCTS, SPIN-IN TYPE WITH MANUAL VOLUME DAMPER.

(7) MANUFACTURER: CASCO DUCT OR EQUAL.

(8) INSTALLATION: INSTALL IN FULLY EXTENDED POSITION USING ONLY MINIMUM LENGTH REQUIRED TO MAKE THE CONNECTIONS WITH 1/2" WIDE POSITIVE LOCKING STEEL STRAPS OR APPROVED EQUAL. SUPPORT DUCT AT THREE FEET MAX. OR AS PER LOCAL CODES.

(9) MANUAL VOLUME DAMPERS:

(A) DAMPERS WITH LOCKING AND INDICATING QUADRANTS TO BE INSTALLED IN EACH BRANCH OF ALL DUCTS AS INDICATED ON THE DRAWINGS IN ADDITION TO ANY VOLUME CONTROL AT OUTLETS.

(B) AFTER FINAL ADJUSTMENT OF SYSTEM, LOCK QUADRANTS AND MARK CLEARLY SHOWING DAMPER POSITION, OPEN AND SHUT POSITIONS.

(C) DAMPERS IN ROUND DUCTS SHALL BE OF THE SINGLE BLADE TYPE.

(D) DAMPERS IN RECTANGULAR DUCTS:

- DUCTS 11" IN HEIGHT OR LESS SHALL BE OF THE SINGLE BLADE TYPE.
- DUCTS 12" IN HEIGHT OR HIGHER SHALL BE OF THE OPPOSED BLADE TYPE.
- DAMPERS SHALL BE MANUFACTURED BY TERRI- AIR BALANCE INC., 13516 DESMOND ST., PACOIMA, CA 91331, TELEPHONE (213) 629- 3341, OR AIR BALANCE INC., 3100 WEST GRAND AVE., CHICAGO, ILL 60622, TELEPHONE (312) 826-6000.

(E) FIRE DAMPERS:

-WHERE REQUIRED BY LOCAL CODES SHALL BE APPROVED AND FURNISHED AND INSTALLED.

J. INSULATION.

(1) DUCT LINING: ALL SUPPLY AIR AND RETURN AIR DUCTWORK AND PLENUMS EXPOSED ON ROOF AND EXTENDED BELOW ROOF LINE TO BE LINED WITH 1-1/2" FIBERGLASS 1-1/2 POUND DENSITY DUCT-LINER FACED WITH BLACK FIRE-RESISTANT COATING, MEETING REQUIREMENTS OF N.F.P.A. 90A, AND INSTALLED AS PER MANUFACTURER'S RECOMMENDATIONS. DUCT DIMENSIONS SHOWN ON THE DRAWINGS ARE SHEET METAL SIZE.

(2) DUCT INSULATION: ALL SUPPLY AIR AND RETURN AIR DUCTWORK INSTALLED IN CONCEALED SPACES SHALL BE WRAPPED WITH ONE-INCH (1") THICK ULTRALIGHT INSULATION 3/4 POUND DENSITY, WITH VAPOR BARRIER.

(3) MINIMUM STANDARD OF INSTALLATION: END JOINTS ARE CLOSED WITH 2" OVERLAPPING VAPOR BARRIER FLAP AND 2" JOINT FLAP IS FORMED OVER LONGITUDINAL JOINT. OVERLAPPING FLAPS ARE STAPLED AND SEALED WITH PRESSURE SENSITIVE TAPE OR PLAIN TAPE APPLIED WITH MASTIC.

(4) AS MANUFACTURED BY OWENS/CORNING OR APPROVED EQUAL.

K. BALANCING,

(1) BALANCE, ADJUST AND TEST ALL MOVING EQUIPMENT, AIR DISTRIBUTION, HEATING SYSTEMS, EXHAUST AND MAKE-UP AIR SYSTEMS AS SPECIFIED AND AS INDICATED ON DRAWINGS.

(2) BALANCING AND TESTING SHALL NOT BEGIN UNTIL ALL SYSTEMS ARE COMPLETED AND IN FULL WORKING ORDER.

(3) CHANGES IN FILTERS, DRIVES, AND DAMPERS OR THE ADDITION OF DAMPERS, CONTROL DEVICES OR GAUGES REQUIRED TO CORRECT BALANCE AS REQUIRED SHALL BE MADE AT NO ADDITIONAL COST TO OWNER.

(4) ALL EQUIPMENT AND SYSTEMS SHALL BE RUN THROUGH THEIR CYCLE TO CHECK FOR CORRECT WIRING AND SEQUENCING.

(5) ALL INSTRUMENTS, FORMS AND PROCEDURES SHALL MEET THE REQUIREMENTS SET FORTH BY THE NATIONAL ENVIRONMENTAL BALANCING BUREAU (N.E.B.B.).

* (6) COPY OF INDEPENDENT, CERTIFIED BALANCING REPORT SHALL BE SENT TO THE OWNER. *

L. WARRANTY

(1) THE ENTIRE H.V.A.C. SYSTEM TO BE FREE OF DEFECTIVE WORKMANSHIP AND MATERIALS FOR A PERIOD OF ONE YEAR FROM DATE OF START-UP.

(2) THAT ALL EQUIPMENT FURNISHED AND INSTALLED WILL CARRY A MANUFACTURER'S REPLACEMENT- PART WARRANTY FOR A PERIOD OF ONE YEAR FROM THE DATE OF START-UP.

(3) FURNISH, AT NO CHARGE WITHIN (90) DAYS FROM DATE OF START-UP, ANY LABOR NECESSARY TO PROPERLY IMPLEMENT THE ABOVE EQUIPMENT WARRANTY RESPONSIBILITY.

(4) THAT ALL AIR CONDITIONING COMPRESSORS FURNISHED AND INSTALLED SHALL CARRY A FIVE YEAR MANUFACTURER'S REPLACEMENT WARRANTY

NOTES:

THE MAKE-UP AND EXHAUST AIR SYSTEMS SHALL BE CONNECTED BY AN ELECTRIC INTERLOCKING SWITCH.

GREASE FILTERS SHALL BE CLASS 1 WHEN TESTED IN ACCORDANCE WITH THE TEST METHOD IN SFM 12-71-1.

OUTSIDE AIR VENTILATION CALCULATION

EQPT TAG	OCCUPANCY	AREA (SQ. FT)	O/A VENTILATION REQUIREMENT PER IBC-2000, SOUTHERN NEVADA AMENDMENTS: NUMBER OF PEOPLE	CFM/PERSON	REQUIRED OUTSIDE AIR CFM	USED OUTSIDE AIR CFM
AC-1	REST ROOM	342	2	@ 15 CFM	30	1300
	FOOD SERVICE	190	3	@ 15 CFM	45	
	KITCHEN	1065	10	@ 15 CFM	150	
AC-2	DINING	1503	90	@ 20 CFM	1800	1800
TOTAL		3100	107	N/A	2065	3100

HOOD CALCULATIONS

H 1: Q= 277/FT (3.16x277) = 875 CFM MINIMUM EXHAUST REQUIRED.
USE 950 CFM WITH A 9"x9" DUCT AT 1689 FPM.
FLAMEGARD FILTERS: (6) 10"x16" U.L.
FILE * MH26772

H 2: Q= 275/FT (5 x 275) = 1375 CFM MINIMUM EXHAUST REQUIRED.
USE 1600 CFM WITH A 12"x12" DUCT AT 1600 FPM.
FLAMEGARD FILTERS: (1) 20"x16", (3) 20"x20"
U.L. FILE * MH18450

H 3: Q= 50A, *50 x (3.5 x7) = 1225 CFM MINIMUM EXHAUST REQUIRED.
USE 1575 CFM WITH A 12"x12" DUCT AT 1575 FPM.
FLAMEGARD FILTERS: (4) 20"x16", (1) 20"x20" U.L. FILE * MH18450

HOOD MATERIALS

1. ALL EXPOSED SURFACES TO BE 18 GA. TYPE 304 STAINLESS STEEL WITH #4 FINISH.
2. ALL NON-EXPOSED STRUCTURAL SURFACES TO BE 18 GA. GALVANIZED STEEL.
3. GREASE EXHAUST PLENUM AND DUCTWORK TO BE 16 GA. GALVANIZED STEEL, CONTINUOUSLY WELDED AND PITCHED AT A MINIMUM 1/4" PER FOOT TO A CLEANABLE RECEPTOR.
4. HOODS ARE U.L. LISTED AND ARE CONSTRUCTED AND INSTALLED IN ACCORDANCE WITH ALL U.L. SPECIFICATIONS

07-19993
Clark County Dev. Services
Building Services Division
AUG 06 2007 DL
Reviewed and Accepted
Wilidan

THIS DRAWING IS AN INSTRUMENT OF SERVICE BETWEEN THE ARCHITECT AND HIS CLIENT, BUT REMAINS THE PROPERTY OF THE ARCHITECT.
© ALL RIGHTS RESERVED 2005

architecture/engineering/site
GARY GUY WILSON
7625 South Industrial Road, Suite#100
Las Vegas, Nevada 89139
AIA STUDIOS...
planning/interior design
(702)876-0668
professional corp / certified n.c.a.r.b.
4175 South Riley Street
Suite 200
Las Vegas, NV 89147
Tel: 702.873.0670
Fax: 702.873.1088
www.sbnevada.com
MEP: SH NEVADA
CONSULTANTS:
CIVIL: CIVILWORKS, INC.
STRUCTL: WRIGHT ENGINEERS

CARL'S JR RESTAURANT
@ RUSSELL ROAD & EASTERN AVE.
McCARRAN MARKETPLACE
FOR: S.L. INVESTMENTS, MR. STEVE LARSON
CLARK COUNTY, NEVADA

PROJ.NO.	13520701.00
PROJ.ARCH.	G.G.WILSON,AIA
PROJ.MGR.	MVM
JOB CAPT.	MVM
TECH'N	
ARCH.CHK.	GGW
PH-2/3	02FEB07
PH-4	30MAR07
PH-5	02MAY07

REVISIONS
1 ..
2
3
4
5
6
7

PRINTS REQUIRE ARCHITECT'S SEAL & SIGN. FOR PROOF OF VALIDITY

PROFESSIONAL ENGINEER-STATE OF NEVADA
ALEXANDER JANKOWSKI
EXPIRES 06/30/07
MECHANICAL
NO. 13957
4/18/07

LV070018

MECHANICAL NOTES & SCHEDULES

SHT.NO. M-1

P:\PROJ\LV070018\MECH\M-1_SCHEDULES.dwg, 4/18/2007 9:26:38 AM, jlorenzo

AIR DISTRIBUTION

DESIG-NATION	MFR.	MODEL	UNIT & DUCT SIZE	OPENING IN STRUCT.	TYPE	REMARKS
S1 / CFM	METAL AIRE	7650-6	14"ø	2'x2' GRID	CD	1, 2
S2 / CFM	METAL AIRE	9000-6P	14"ø	2'x2' GRID	CD	1, 2
S3 / CFM	METAL AIRE	9000-6P	10"ø	2'x2' GRID	CD	1, 2
S4 / CFM	METAL AIRE	9000-2	10"ø	11"x11"	CD	1, 2
S5 / CFM	METAL AIRE	7950-6	12"ø	2'x2' GRID	CD	1, 2
R1 / CFM	METAL AIRE	RH-TB	18"ø	2'x2' GRID	RG	1
E1 / CFM	METAL AIRE	RH-TB	6"ø	2'x2' GRID	EG	1, 2
E2 / CFM	METAL AIRE	RH	8"ø	10"x10"	EG	1, 2

NOTE:
1. PROVIDE SQUARE TO ROUND ADAPTOR
2. PROVIDE MANUAL VOLUME DAMPER.

AIR BALANCE DATA

DESIG-NATION	SUPPLY CFM	RETURN CFM	O.S.A. CFM	EXH. CFM	INT. CFM	BLD'G PRESS.
AC 1	3000	1700	1300	----	----	+1300
MUA 1	2250		2250	----	----	+2250
EF 1	----	----	----	950	----	-950
EF 2	----	----	----	1600	----	-1600
EF 3	----	----	----	1575	----	-1575
TOTALS	5250	1700	3550	4125	----	- 575

GENERAL NOTES

1. REFER TO DIFFUSER AND GRILLE SCHEDULE FOR ANY UNMARKED RUN-OUT SIZES.
2. TRANSITION AS REQUIRED FROM KITCHEN HOODS TO DUCTWORK SIZES SHOWN.
3. COORDINATE EXACT SIZE AND LOCATIONS OF ALL KITCHEN HOODS W/ KITCHEN EQUIPMENT CONTRACTOR.
4. VERIFY ALL DIFFUSER AND GRILLE LOCATIONS WITH THE ELECTRICAL LIGHTING PLAN AND ARCHITECTURAL REFLECTED CEILING PLAN.
5. VERIFY DUCTWORK ROUTING AND CLEARANCES WITH THE ARCHITECTURAL AND STRUCTURAL PLANS.
6. MAINTAIN A 10 FT. MINIMUM DISTANCE BETWEEN ALL O/A INTAKES AND ANY PLUMBING OR EXHAUST VENTS.
7. GREASE DUCTS SHALL BE SLOPED MINIMUM 1/4" PER LINEAR FOOT TOWARD THE HOOD.
8. PROVIDE CLEANOUTS FOR GREASE DUCTS AND TYPE 1 HOODS PER CODE.
9. ALL TYPE 1 GREASE HOODS SHALL BE EQUIPPED WITH FIRE EXTINGUISHING ANSUL SYSTEM WITH REQUIRED NUMBER OF APPLIANCE NOZZLES, PLENUM AND DUCT NOZZLES.
10. PAINT ALL EXPOSED DUCTWORK, DIFFUSERS & GRILLE AS DIRECTED BY ARCHITECT.
11. PROVIDE VOLUME CONTROL DAMPER FOR EACH BRANCH TAKE-OFF TO DIFFUSER/GRILLE. (TYP).

KEY NOTES

1. TRANSITION TO EXHAUST FAN ON ROOF.
2. FLEXIBLE DUCTWORK. (TYP)
3. FULL SIZE UNIT OPENING DOWN TO ACOUSTICALLY LINED S/A, R/A PLENUM.
4. EXHAUST DUCT DOWN CONNECTED TO TYPE "I" HOOD.
5. WATER HEATER. SEE PLUMBING DRAWINGS.
6. TYPE "I" GREASE HOOD BY KITCHEN EQUIPMENT SUPPLIER.
7. ROOM TEMPERATURE SENSOR.

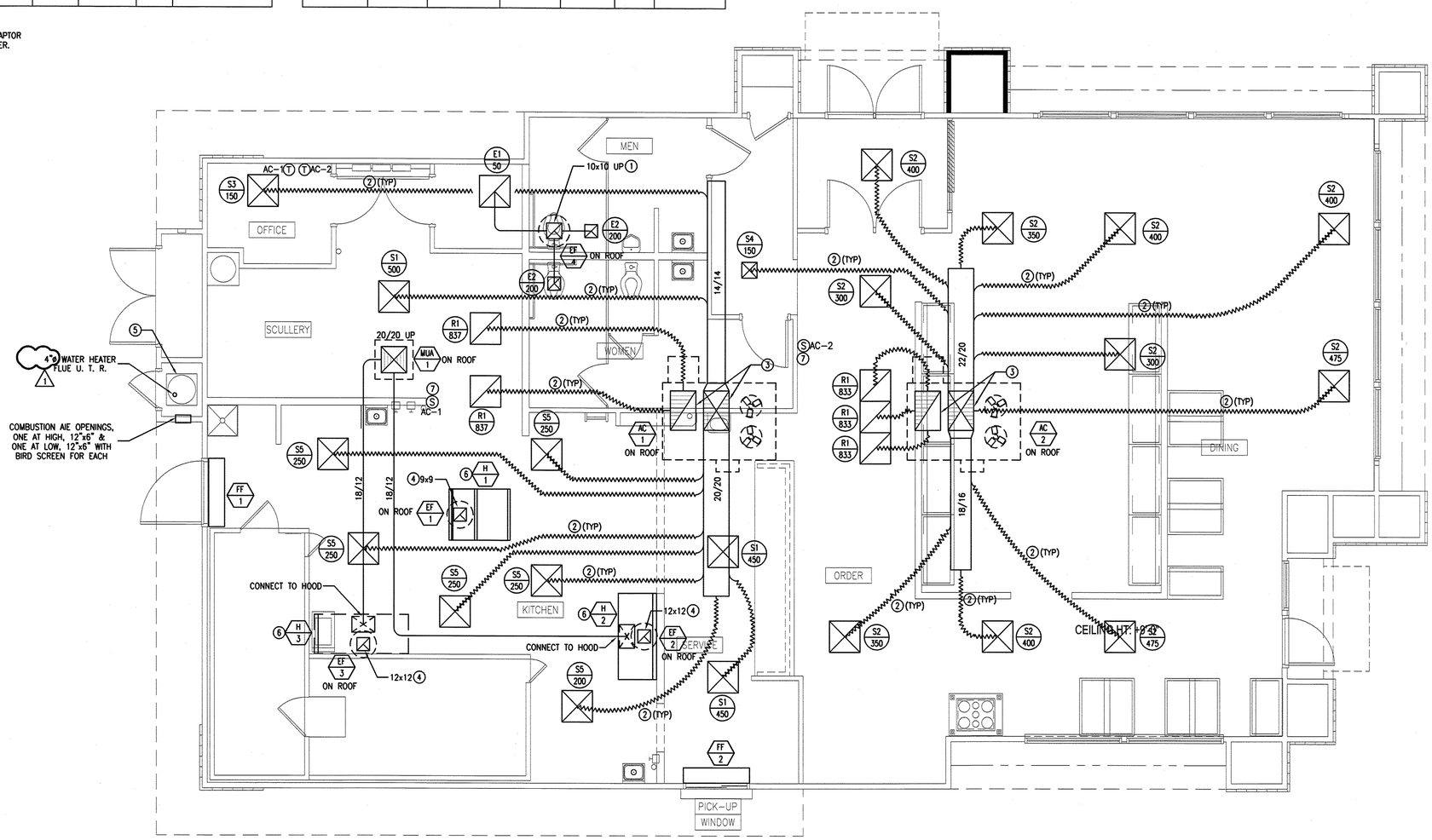

07-19993
Clark County Dev. Services
Building Services Division
AUG 06 2007 DL
Reviewed and Accepted
Wilidan

N

MECHANICAL FLOOR PLAN | SC: 1/4"=1'-0" | 1

THIS DRAWING IS AN INSTRUMENT OF SERVICE BETWEEN THE ARCHITECT AND HIS CLIENT, BUT REMAINS THE PROPERTY OF THE ARCHITECT.
© ALL RIGHTS RESERVED 2005

architecture/engineering/site
GARY GUY WILSON AIA
7625 South Industrial Road, Suite#100
Los Vegas, Nevada 89139
planning/interior design
STUDIOS...
(702)876-0668
professional corp / certified n.c.a.r.b.
MEP: SHI NEVADA
4175 South Riley Street
Suite 200
Las Vegas, NV 89147
Tel: 702.873.0870
Fax: 702.873.1098
www.shinevada.com
CONSULTANTS:
CIVIL: CIVILWORKS, INC.
STRUCTL: WRIGHT ENGINEERS

CARL'S JR RESTAURANT
@ RUSSELL ROAD & EASTERN AVE.
McCARRAN MARKETPLACE
FOR: S.L. INVESTMENTS, MR. STEVE LARSON
CLARK COUNTY, NEVADA

PROJ.NO.	13520701.00
PROJ.ARCH.	G.G.WILSON,AIA
PROJ.MGR.	MVM
JOB CAPT.	MVM
TECH'N	.
ARCH.CHK.	GGW
PH-2/3	02FEB07
PH-4	30MAR07
PH-5	02MAY07

REVISIONS
1 6/12/07 BLDG DEPT COMMENTS

PRINTS REQUIRE ARCHITECT'S SEAL & SIGN. FOR PROOF OF VALIDITY

PROFESSIONAL ENGINEER-STRUCTURAL
ALEXANDER JANKOVIC
EXPIRES 06/30/07
MECHANICAL
No. 13951
NEVADA
6/20/07

LV070018

MECHANICAL FLOOR PLAN

SHT.NO. M-2

P:\PROJ\LV070018\MECH\M-2_FLOOR PLAN.dwg, 6/28/2007 11:28:30 AM, bonacco

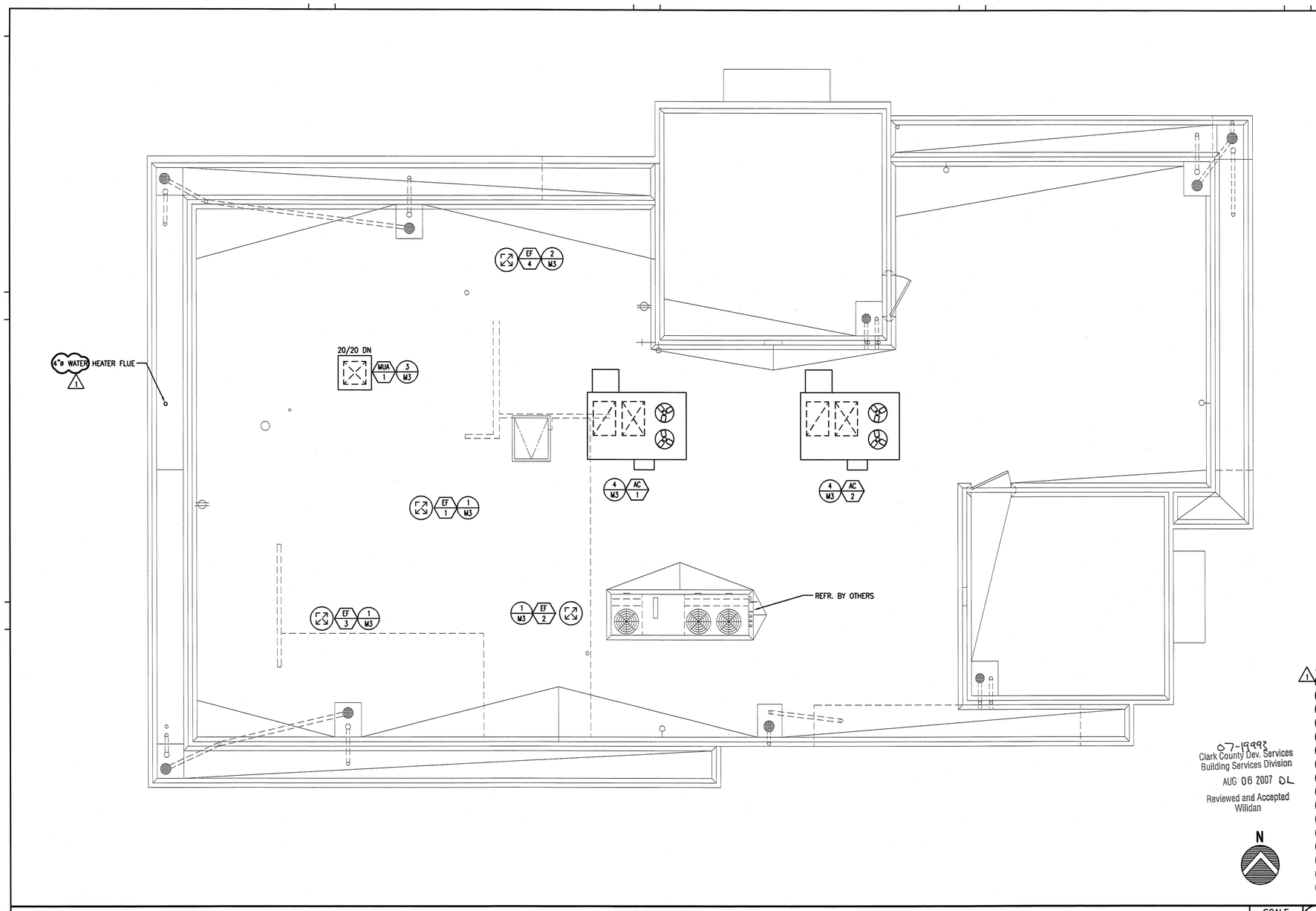

MECHANICAL ROOF PLAN | SCALE 1/4"=1'-0" | 5

07-19992
Clark County Dev. Services
Building Services Division
AUG 06 2007 DL
Reviewed and Accepted
Willdan

NOTE: DIMENSIONS SHOWN ON THIS DETAIL ARE FOR THE EQUIPMENT SPECIFIED AND WILL VARY IF OTHER EQUIPMENT IS USED. CONFIRM EXACT DIMENSIONS WITH EQUIPMENT MANUFACTURER.

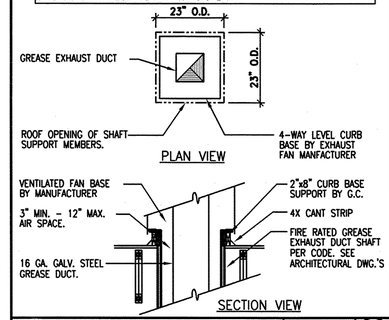

EXHAUST FAN DETAIL EF-1, 2, & 3 | SCALE 1/2"=1'-0" | 1

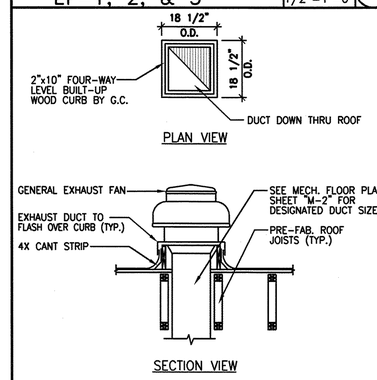

EXHAUST FAN DETAIL EF-4 | SCALE 1/2"=1'-0" | 2

NOTE: DIMENSIONS SHOWN ON THIS DETAIL ARE FOR THE EQUIPMENT SPECIFIED AND WILL VARY IF OTHER EQUIPMENT IS USED. CONFIRM EXACT DIMENSIONS WITH EQUIPMENT MANUFACTURER.

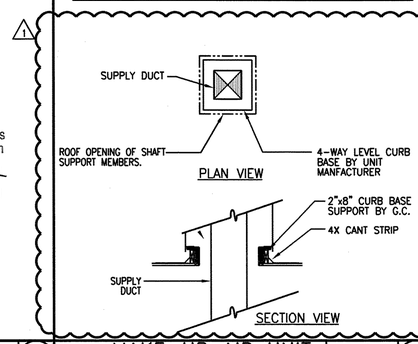

MAKE-UP AIR UNIT MUA-1 | SCALE N.T.S. | 3

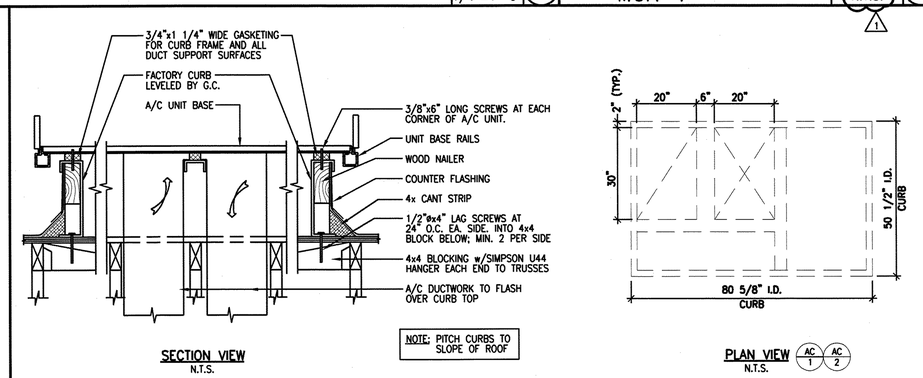

ROOF CURB DETAIL | SCALE N.T.S. | 4

THIS DRAWING IS AN INSTRUMENT OF SERVICE BETWEEN THE ARCHITECT AND HIS CLIENT, BUT REMAINS THE PROPERTY OF THE ARCHITECT.
© ALL RIGHTS RESERVED 2005

architecture/engineering/site
GARY GUY WILSON
7625 South Industrial Road, Suite#100
Las Vegas, Nevada 89139
planning/interior design
AIA STUDIOS...
(702)876-0668
professional corp / certified n.c.a.r.b.

MEP: SE NEVADA
4175 South Riley Street
Suite 200
Las Vegas, NV 89147
Tel: 702.873.7070
Fax: 702.873.1099
www.sinevada.com

CONSULTANTS:
CIVIL: CIVILWORKS, INC.
STRUCTL: WRIGHT ENGINEERS

CARL'S JR RESTAURANT
@ RUSSELL ROAD & EASTERN AVE.
McCARRAN MARKETPLACE
FOR: S.L. INVESTMENTS, MR. STEVE LARSON
CLARK COUNTY, NEVADA

MECHANICAL ROOF PLAN & DETAILS

PROJ.NO.	13520701.00
PROJ.ARCH.	G.G.WILSON,AIA
PROJ.MGR.	MVM
JOB CAPT.	MVM
TECH'N	
ARCH.CHK.	GGW
PH-2/3	02FEB07
PH-4	30MAR07
PH-5	02MAY07

REVISIONS

1	6/12/07	BLDG DEPT COMMENTS

PRINTS REQUIRE ARCHITECT'S SEAL & SIGN. FOR PROOF OF VALIDITY

PROFESSIONAL ENGINEER-STAMP
ALEXANDER JANKOVICH
EXPIRES 06/30/08
MECHANICAL
No. 12957
STATE OF NEVADA
6/28/07

LV070018

SHT.NO. M-3

P:\PROJ\LV070018\MECH\M-3_ROOF.dwg, 6/28/2007 11:28:48 AM, jlorenzo

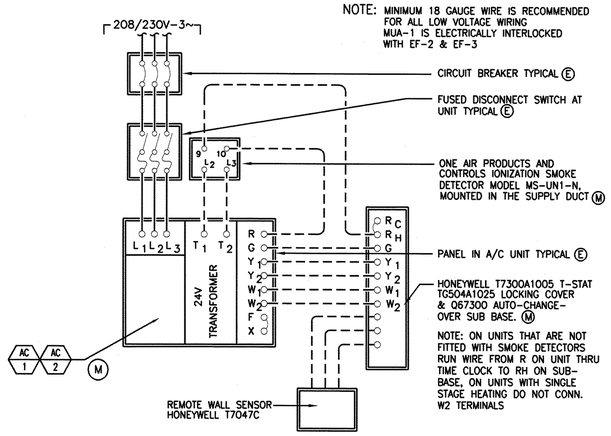

NOTE: MINIMUM 18 GAUGE WIRE IS RECOMMENDED FOR ALL LOW VOLTAGE WIRING MUA-1 IS ELECTRICALLY INTERLOCKED WITH EF-2 & EF-3

NOTE: ON UNITS THAT ARE NOT FITTED WITH SMOKE DETECTORS RUN WIRE FROM R ON UNIT THRU TIME CLOCK TO RH ON SUB-BASE, ON UNITS WITH SINGLE STAGE HEATING DO NOT CONN. W2 TERMINALS

AC SYSTEM CONTROL DIAGRAM — SCALE: NONE — 1

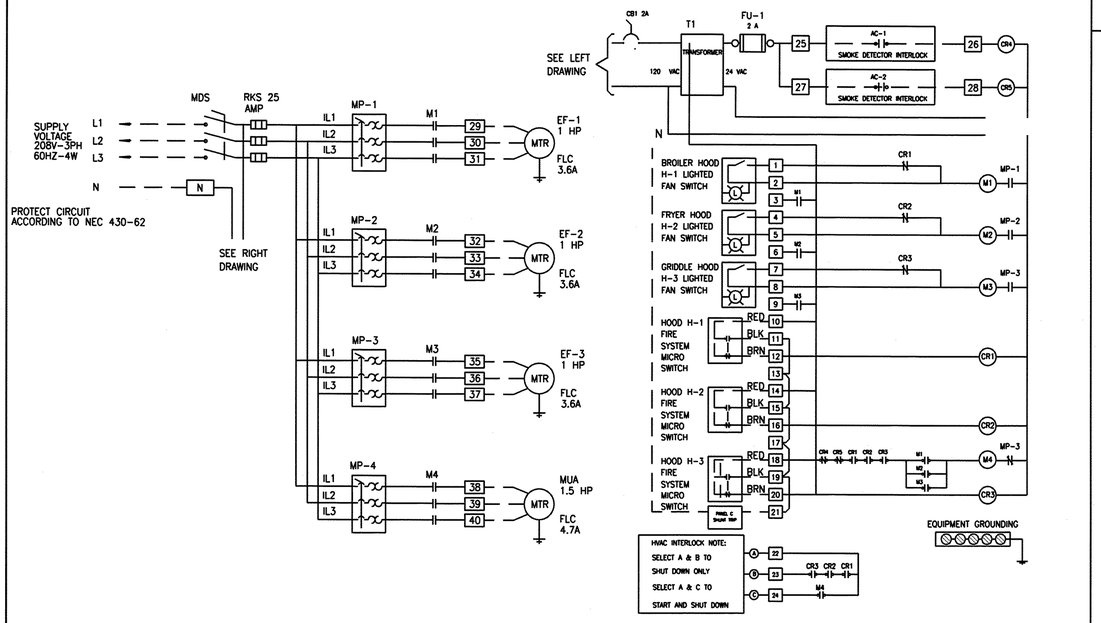

MECHANICAL EQUIPMENT CONTROL DIAGRAM — SCALE: — 2

LEGEND

- DENOTES TERMINAL BLOCK CONNECTION
- FIELD / CLIENT INSTALLATION
- EQUIPMENT GROUNDING
- FIELD / CLIENT INSTALLATION
- (M) INDICATES FURNISHED & INSTALLED BY A/C CONTRACTOR, WIRING BY ELECT. CONTRACTOR, FINAL LOW VOLTAGE CONNECTION, BY A/C CONTRACTOR.
- (E) INDICATES FURNISHED & INSTALLED BY ELECTRICAL CONTRACTOR.
- LINE VOLTAGE WIRE BY ELECTRICAL CONTRACTOR.
- LOW VOLTAGE WIRE BY ELECTRICAL CONTRACTOR, FINAL CONNECTION BY A/C CONTRACTOR.

  NOTE: FOR EXTENT OF ELECTRICAL CONTRACTORS RESPONSIBILITY SEE DRAWING M-1 SECTION 3A (1 THRU 6).
- (T1)(T2) HONEYWELL T7300 T-STAT & TC504A1025 LOCKING COVER & Q6730D AUTO-CHANGE-OVER SUB BASE

  NOTE: AUTOMATIC TEMPERATURE CONTROL DEVICES FOR REGULATION OF SPACE TEMPERATURE SHALL BE CAPABLE OF BEING SET FROM 55°F TO 85°F & HAVE THE ABILITY TO OPERATE THE HEATING AND COOLING IN SEQUENCE IF BOTH ARE PROVIDED. CONTROL SHALL BE ADJUSTABLE TO PROVIDE A RANGE OF UP TO 10°F FULL HEATING & FULL COOLING & HAVE THE CAPABILITY OF TERMINATING ALL HEATING AT A TEMP. NO MORE THAN 70°F & COOL AT A TEMP. NO LESS THAN 78°F.
- (SD) SMOKE DETECTOR MODEL MS-UN1-N, MOUNTED IN THE SUPPLY DUCT
- (S) REMOTE WALL SENSOR HONEYWELL T7047C

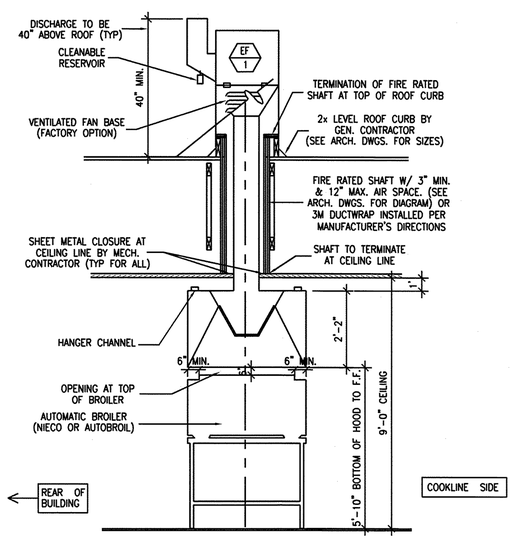

SECTION VIEW HOOD 1 — SCALE: NONE — 3

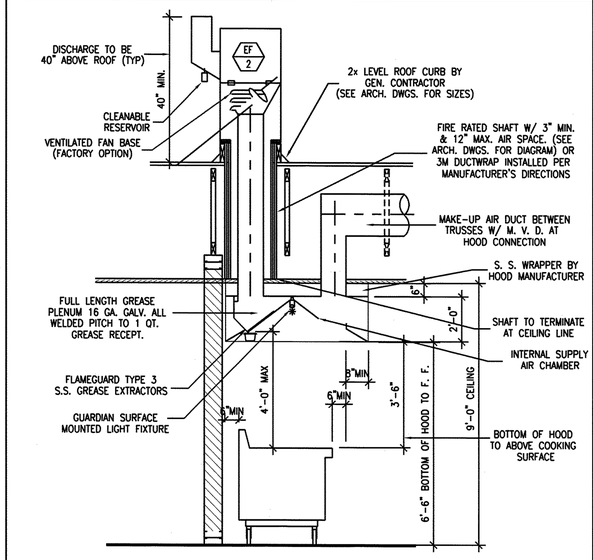

SECTION VIEW HOOD 2 — SCALE: NONE — 4

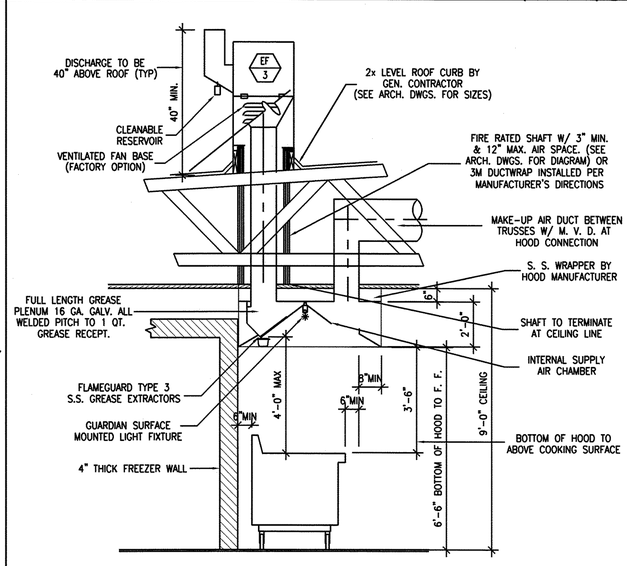

SECTION VIEW HOOD 3 — SCALE: NONE — 5

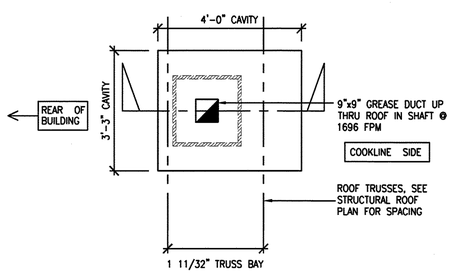

HOOD 1 DETAIL — SCALE: NONE — 6

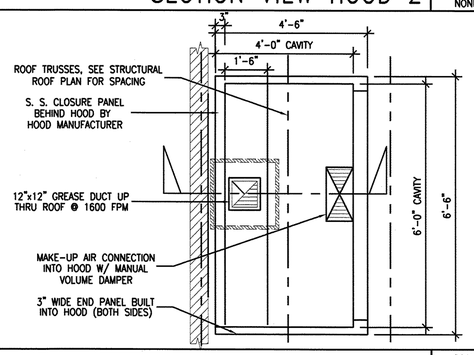

HOOD 2 DETAIL — SCALE: NONE — 7

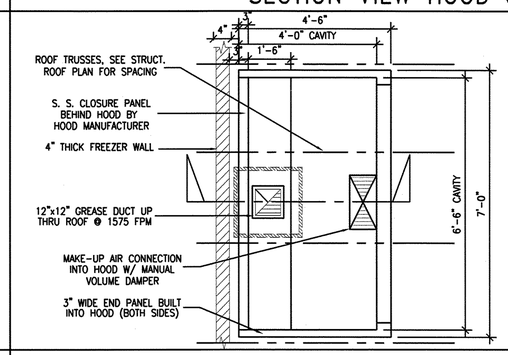

HOOD 3 DETAIL — SCALE: NONE — 8

07-19993
Clark County Dev. Services
Building Services Division
AUG 06 2007 DL
Reviewed and Accepted
Willdan

THIS DRAWING IS AN INSTRUMENT OF SERVICE BETWEEN THE ARCHITECT AND HIS CLIENT, BUT REMAINS THE PROPERTY OF THE ARCHITECT.
© ALL RIGHTS RESERVED 2005

architecture/engineering/site
GARY GUY WILSON
7625 South Industrial Road, Suite#100
Las Vegas, Nevada 89139

planning/interior design
AIA STUDIOS...
(702)876-0668
professional corp / certified n.c.a.r.b.
4175 South Riley Street
Suite 200
Las Vegas, NV 89147
Tel: 702.873.0670
Fax: 702.873.0598
www.sfinevada.com

MEP: SH NEVADA

CONSULTANTS:
CIVIL: CIVILWORKS, INC.
STRUCTL: WRIGHT ENGINEERS

CARL'S JR RESTAURANT
@ RUSSELL ROAD & EASTERN AVE.
McCARRAN MARKETPLACE
FOR: S.L. INVESTMENTS, MR. STEVE LARSON
CLARK COUNTY, NEVADA

PROJ.NO.	13520701.00
PROJ.ARCH.	G.G.WILSON,AIA
PROJ.MGR.	MVM
JOB CAPT.	MVM
TECH'N	
ARCH.CHK.	GGW
PH-2/3	02FEB07
PH-4	30MAR07
PH-5	02MAY07

REVISIONS

PRINTS REQUIRE ARCHITECT'S SEAL & SIGN. FOR PROOF OF VALIDITY

PROFESSIONAL ENGINEER-STATE OF NEVADA
ALEXANDER JANKOVIC
EXPIRES 06/30/07
MECHANICAL
No. 13957
4/18/07

LV070018

WIRING DIAGRAM & HOOD DETAIL

SHT.NO. M-4

P:\PROJ\LV070018\MECH\M-4_Diagrams.dwg, 4/18/2007 5:27:26 AM, jlorenzo

ELECTRICAL SYMBOL LEGEND

LIGHTING (NORMAL)

UPPER CASE LETTER (A) BY LIGHT FIXTURE = FIXTURE TYPE
LOWER CASE LETTER (a) BY LIGHT FIXTURE = CONTROL SWITCH
"NL" INDICATES NIGHT LIGHT (NON SWITCHED)

- 1'X3' FLUORECENT LIGHT (CEILING)
- 1'X3' FLUORESCENT LIGHT (WALL)
- 1'X4' FLUORESCENT LIGHT (CEILING)
- 1'X4' FLUORESCENT LIGHT (WALL)
- 2'X2' FLUORESCENT LIGHT
- 2'X4' FLUORESCENT LIGHT
- SCONCE / wall mounted light
- NEON TUBE - LENGTH AS SHOWN ON PLANS
- 2' TASK/STRIP LIGHTING
- 3' TASK/STRIP LIGHTING
- 4' TASK/STRIP LIGHTING
- 6' TASK/STRIP LIGHTING
- 8' TASK/STRIP LIGHTING
- TRACK LIGHTING
- ACCENT LIGHT
- DOWN LIGHT
- DECORATIVE PENDANT

LIGHTING (EMERGENCY)

- EMERGENCY DOWN LIGHT
- 1'X3' EMERGENCY FLUORESCENT LIGHT (CEILING)
- 1'X3' EMERGENCY FLUORESCENT LIGHT (WALL)
- 1'X4' EMERGENCY FLUORESCENT LIGHT (CEILING)
- 1'X4' EMERGENCY FLUORESCENT LIGHT (WALL)
- 2'X2' EMERGENCY FLUORESCENT LIGHT
- 2'X4' EMERGENCY FLUORESCENT LIGHT
- EMERGENCY SCONCE
- EMERGENCY WALL WASHER
- BATTERY PACK LIGHT FIXTURE

LIGHTING (SITE PLAN)

- LIGHT POST - 1 SIDE
- LIGHT POST - 2 SIDES
- LIGHT POST - 3 SIDES
- LIGHT POST - 4 SIDES
- P POWER POLE
- SP SPECIAL POWER POLE

LIGHTING (SWITCHES)

- D DIMMER
- $ LIGHT SWITCH
  - 2 = DOUBLE POLE
  - 3 = THREE WAY
  - 4 = FOUR WAY
  - a = CONTROL DESIGNATION
  - k = KEY-OPERATED SWITCH
  - P = PILOT LIGHT
  - M = MOTOR RATED TOGGLE SWITCH
  - TO = MOTOR RATED TOGGLE SWITCH WITH THERMAL OVERLOAD PROTECTION
- LVT LOW VOLTAGE SWITCH BANK #1
- PC PHOTOCELLS

EXIT SIGNS

- EXIT SIGN CEILING
- EXIT SIGN WALL MOUNTED
- EXIT SIGN BUGEYE COMBO CEILING
- EXIT SIGN BUGEYE COMBO WALL MOUNTED
- EXIT SIGN DIRECTIONAL ARROW 1
- EXIT SIGN DIRECTIONAL ARROW 2

CONDUIT & WIRING SYMBOLS

- GROUND CONDUCTOR
- "HOT" OR "PHASE" CONDUCTOR
- NEUTRAL CONDUCTOR
- 1/2" CONDUIT WITH 3#12 WIRES HOT, NEUTRAL, GROUND. (UNO)
- 1/2" CONDUIT WITH 4#12 WIRES (UNO)
- 3/4" CONDUIT WITH 5#12 WIRES (UNO)
- UNDERGROUND CONDUIT
- GROUND CONNECTION
- CONDUIT HOMERUN TO PANELBOARD "A" A-1,3,5 WITH CIRCUITS 1,3,5

OUTLETS (DATA/VOICE)

- DATA (FLOOR) 3/4" WITH TWO(2) CAT 5 TO TEL/DATA CABINET
- DATA (WALL) 3/4" WITH ONE(1) CAT 5 TO TEL/DATA CABINET
- DATA/VOICE (WALL) 3/4" WITH TWO(2) CAT 5 TO EXISTING TEL/DATA CABINET
- DATA/VOICE (WALL) 3/4" WITH TWO(2) CAT 5 TO EXISTING TEL/DATA CABINET
- VOICE (FLOOR) 1/2" WITH ONE(1) CAT 5 TO TEL/DATA CABINET
- VOICE (WALL) 1/2" WITH ONE(1) CAT 5 TO TEL/DATA CABINET

OUTLETS (NORMAL)

- DUPLEX (WALL)
- DUPLEX (CEILING)
- DUPLEX (FLOOR)
- GFI (WALL)
- IG ISOLATED GROUND DUPLEX OUTLET - FLUSH WALL
- JUNCTION BOX (CEILING)
- J JUNCTION BOX (FLOOR)
- JUNCTION BOX (WALL)
- QUAD (FLOOR)
- QUAD (WALL) IG = ISOLATED GROUND
- SINGLE (CEILING)
- SINGLE (WALL)
- SINGLE (FLOOR)
- SPECIAL PURPOSE (FLOOR)
- SPECIAL PURPOSE (WALL)
- 220V (NEMA 6-20R)
- CLOCK
- TV TELEVISION OUTLET, MOUNTED @18" AFF

PANELS

- SURFACE MOUNT
- FLUSH MOUNT
- DISTRIBUTION PANELBOARD
- SWITCHBOARD
- TELEPHONE BACKBOARD, 4'X8'X3/4" FIRE RATED PLYWOOD (UNO)

FIRE ALARM

- FSD FIRE SMOKE DAMPER
- DH DOOR HOLDER
- S SMOKE DETECTOR
- D DUCT DETECTOR
- H HEAT DETECTOR
- H HORN
- H HORN/STROBE
- P SPEAKER
- P SPEAKER/STROBE

SINGLE LINE

- PANEL
- T TRANSFORMER
- ATS
- A AMMETER
- A V VW AVKW
- COMBINATION MOTOR CONTROLLER AND DISCONNECT SWITCH
- CIRCUIT BREAKER
- CIRCUIT BREAKER FUSE DEVICE - DRAWOUT
- C CONTACTOR
- CB CIRCUIT BREAKER, ENCLOSED IN NEMA ENCLOSURE
- DISCONNECT SWITCH
- DRAWOUT
- GF GROUND FAULT
- GROUND
- ELECTRONIC METERING
- FUSE
- F FUSIBLE DISCONNECT SWITCH, 3-POLE (UNO),
- FUSED DISCONNECT SWITCH W/ STARTER, 3-POLE (UNO)
- AS 3P AF FUSE SWITCH
- AS 3P AF FUSE SWITCH - DRAWOUT
- G GENERATOR
- MEDIUM VOLTAGE FUSIBLE SWITCH
- M METERING
- M MOTOR
- STARTER
- S SHUNT TRIP CONTROLLED DEVICE
- SWITCH
- T THERMOSTAT, 48" AFF
- TRANSFORMER
- TRANSFORMER WITH GROUND
- VFD VARIABLE FREQUENCY DRIVE

MISCELLANEOUS

- CONDUIT STUB DOWN
- CONDUIT STUB UP
- CAMERA, FIXED
- CAMERA, PAN/TILT/ZOOM
- END CAP
- PB PULL BOX
- PUSH BUTTON
- P FLOOR POWER FEED TO MODULAR FURNITURE
- P D POWER/COMM DROP TO MODULAR FURNITURE
- WALL POWER FEED TO MODULAR FURNITURE
- WALL COMM FEED TO MODULAR FURNITURE
- 1 FEEDER SCHEDULE CALLOUT
- ST SHUNT TRIP CONTROLLED DEVICE
- BREAK
- 1 KEY/SPECIFIC/REFERENCE NOTE
- 1 REVISION TRIANGLE
- 1 E204 DETAIL CALLOUT
- EF 1 MECHANICAL EQUIPMENT CALLOUT

ABBREVIATIONS

A	AMPERE	KV	KILOVOLT
AFF	ABOVE FINISHED FLOOR	KVA	KILOVOLT AMPERE
AF	AMP FUSE	KW	KILOWATT
AFG	ABOVE FINISHED GRADE	KWH	KILOWATT HOUR
AIC	AMPERE INTERRUPTING CAPACITY	LTG	LIGHTING
ARCH	ARCHITECT(URAL)	LTS	LIGHTS
AS	AMP SWITCH	MAX	MAXIMUM
AWG	AMERICAN WIRE GAUGE	MCB	MAIN CIRCUIT BREAKER
BLDG	BUILDING	MCM	THOUSAND CIRCULAR MILS
C	CONDUIT	MECH	MECHANICAL
CAT	CATALOG	MFR	MANUFACTURER
CB	CIRCUIT BREAKER	MIN	MINIMUM
CKT	CIRCUIT	MLO	MAIN LUGS ONLY
CLG	CEILING	MTD	MOUNTED
CO	CONDUIT ONLY	MTG	MOUNTING
CU	COPPER	NEC	NATIONAL ELECTRICAL CODE
DN	DOWN	NECA	NATIONAL ELECTRICAL CONTRACTOR'S ASSOCIATION
DWG	DRAWING	NEMA	NATIONAL ELECTRICAL MFR'S ASSOCIATION
EA	EACH	NIC	NOT IN CONTRACT
EC	ELECTRICAL CONTRACTOR, EMPTY CONDUIT	NPCO	NEVADA POWER COMPANY
EGC	EQUIPMENT GROUNDING CONDUCTOR	NTS	NOT TO SCALE
ELEC	ELECTRICAL	OCP	OVERCURRENT PROTECTION
EM, EMER	EMERGENCY	P	POLE
EMT	ELECTRICAL METALLIC TUBING	PH	PHASE
EQUIP	EQUIPMENT	PNL	PANEL
FBO	FURNISHED BY OTHERS	PWR	POWER
FF	FINISHED FLOOR	QTY	QUANTITY
FIXT	FIXTURE	REC, RECEPT	RECEPTACLE
FL	FLOOR	REQ'D	REQUIRED
FLEX	FLEXIBLE METALLIC CONDUIT (STEEL)	RGS	RIGID GALVANIZED STEEL CONDUIT
FLUOR	FLUORESCENT	RM	ROOM
FT	FEET OR FOOT	SP	SINGLE POLE
GEC	GROUNDING ELECTRODE CONDUCTOR	TYP	TYPICAL
GFCI	GROUND FAULT CIRCUIT INTERRUPTER	UL	UNDERWRITERS LABORATORY
GFI	GROUND FAULT INTERRUPTER	UNO	UNLESS NOTED OTHERWISE
GND	GROUND	V	VOLT, VOLTAGE
IMC	INTERMEDIATE METAL CONDUIT	VA	VOLT AMPERE
IN	INCH(ES)	W	WATT
ISC	SHORT CIRCUIT AMPERES (KA)	W/	WITH
IG	ISOLATED GROUND	WP	UL LISTED WEATHERPROOF
JB, J-BOX	JUNCTION BOX	XFMR	TRANSFORMER
KA	KILOAMPERES	Z	IMPEDANCE (%)
KCMIL	THOUSAND CIRCULAR MILS		

SHEET INDEX

ELECTRICAL

SHEET NO.	DESCRIPTION	FORMAT - 04/18/07	1	2	3	4	5	6	7	8	9	10	11
E-0.0	ELECTRICAL SYMBOLS LEGEND, GENERAL NOTES, ABBREVIATIONS & SHEET INDEX	●											
E-0.1	ELECTRICAL SPECIFICATIONS	●											
E-1	ELECTRICAL SITE PLAN	●											
E-2	ELECTRICAL MAIN SWITCHBOARD, PANEL SCHEDULE AND SINGLE-LINE DIAGRAM	●											
E-3	ELECTRICAL POWER AND AUXILIARY PLAN	●											
E-4	ELECTRICAL EQUIPMENT SCHEDULE, NOTES AND DETAILS	●											
E-5	ELECTRICAL LIGHTING PLAN	●											
E-6	ELECTRICAL ROOF PLAN	●											
E-7	LIGHTING FIXTURE SCHEDULE, SYMBOL LIST AND EXTERIOR LIGHTING CONTROL SCHEMATIC DIAGRAM	●											
E-8	IECC LIGHTING COMPLIANCE CERTIFICATE	●											

07-19993
Clark County Dev. Services
Building Services Division
AUG 06 2007 SL
Reviewed and Accepted
Wilidan

THIS DRAWING IS AN INSTRUMENT OF SERVICE BETWEEN THE ARCHITECT AND HIS CLIENT, BUT REMAINS THE PROPERTY OF THE ARCHITECT.
© ALL RIGHTS RESERVED 2005

architecture/engineering/site
GARY GUY WILSON AIA
7625 South Industrial Road, Suite#100
Los Vegas, Nevada 89139
planning/interior design
STUDIOS...
(702)876-0668
professional corp / certified n.c.a.r.b.

MEP: SHI NEVADA
4175 South Riley Street
Suite 200
Las Vegas, NV 89147
Tel: 702.873.0670
Fax: 702.873.1098
www.shinevada.com

CONSULTANTS:
CIVIL: CIVILWORKS, INC.
STRUCTL: WRIGHT ENGINEERS

ELECTRICAL SYMBOLS LEGEND, GENERAL NOTES, ABBREVIATIONS & SHEET INDEX

CARL'S JR RESTAURANT
@ RUSSELL ROAD & EASTERN AVE.
McCARRAN MARKETPLACE
FOR: S.L. INVESTMENTS, MR. STEVE LARSON
CLARK COUNTY, NEVADA

PROJ.NO.	13520701.00
PROJ.ARCH.	G.G.WILSON,AIA
PROJ.MGR.	MVM
JOB CAPT.	MVM
TECH'N	
ARCH.CHK.	GGW
PH-2/3	02FEB07
PH-4	30MAR07
PH-5	02MAY07

REVISIONS

PRINTS REQUIRE ARCHITECT'S SEAL & SIGN FOR PROOF OF VALIDITY

LV070018

SHT.NO. E-0

ELECTRICAL SPECIFICATIONS

PART I – GENERAL

1.01 GENERAL PROJECT REQUIREMENTS

A. All drawings and general provisions of Contract, including Division 1 Specification Sections and General and Supplementary Conditions, shall apply to this section.

B. Related Documents: Architectural specifications, lighting fixture specifications included in others' documents, general, special and supplementary conditions, and similar documents shall form a part of these specifications.

C. Scope of Work: Provide all required labor, materials, equipment and contractor's services necessary for complete and safe installation of electrical work in conformity with requirements of all authorities having jurisdiction, as indicated on drawings and/or described in these specifications.

D. Site Cleanliness: Keep site free from surplus material, tools, and rubbish at all times during construction period and, upon completion, leave site in clean condition.

E. Damage: Repair any damage caused to work of other trades and any other damage caused by this section to intended/original condition.

F. Passage of Equipment: Check the dimensions of equipment of this section to ensure that such equipment can pass through the necessary areas to reach its ultimate installed location. Include in bid costs for all work required, including any work required to move the equipment through the site to this final location and any dismantling/re-assembly.

G. Guarantee: Contractor shall guarantee that all portions of the work are in accordance with contract requirements. Guarantee all work against faulty and improper material and workmanship for a minimum period of one year from date of final acceptance by Owner. If guarantees or warranties for longer terms are specified by contract, such longer term shall apply.

H. Permits and Inspections: Contractor shall secure all approvals and pay all fees for work installed and deliver certificate to owner. Include all costs in base bid.

I. Prior to submitting bid, Contractor shall verify allowable working hours, employee parking areas, material delivery and storage requirements, and requirements for demolition and removal of construction debris (if any). Include all costs in bid for dust barriers and dumpsters for the duration of the project as required.

J. During preparation of bid, Contractor may discover errors in these documents or discrepancies between these documents and those of other trades. In case of discrepancies, Contractor is responsible for bidding the greater quantity or higher quality items if no sufficient resolution of the discrepancy is determined prior to submitting bid.

K. Record Drawings: Upon project completion, deliver to owner one set of reproducible drawings and one bound set of blueprints and panel schedules showing all work as actually installed.

1.02 DEFINITIONS AND TERMINOLOGY

A. Drawings and specifications are of simplified form and include incomplete sentences. Words or phrases such as "The Contractor shall", "shall be", "furnish", "provide", "a", "an", "the" and "all" may be omitted for brevity.

B. Words and/or phrases used in these documents are defined as follows:
1. "Furnish" or "Provide": To supply, install, and connect completely and ready for safe and regular operation of particular work referred to unless specifically noted otherwise.
2. "Install": To erect, mount, and connect complete with any necessary related accessories (whether specifically indicated or not).
3. "Supply": To purchase, procure, acquire, and deliver complete with any necessary related accessories.
4. "Work": Labor, materials, equipment, and accessories,and other items required for proper and complete installation.
5. "Contractor": Electrical Contractor, unless noted otherwise.
6. "Project Manager": The entity/professional responsible for coordination and completion of all required construction work for this project (the General Contractor or Architect or other authority as described in the contract).
7. "Owner": The owner or tenant that is the ultimate recipient of the construction work performed.
8. "Wiring": Raceway, fittings, conductors, boxes, and related items.
9. "Concealed": Installed embedded in masonry or other construction, in furred spaces, within double partitions or hung ceilings, in trenches, in crawl spaces, in enclosures, or as defined in NEC Article 100.
10. "Exposed": Not installed underground or "Concealed" as defined above, or as defined in NEC Article 100.
11. "Equal": Acceptable equivalent in materials, weight, size, design, operation, and efficiency of specified product. Final determination of acceptable equivalency shall be made by engineer when an item is indicated as "Approved Equal".

C. Where terms are not defined in these documents, the definitions in NEC Article 100 shall take precedence.

1.03 REFERENCE STANDARDS

A. Comply with all published codes, specifications, standards, tests, or recommended methods of trade, industry or governmental organizations, or local utilities as they apply to work in this Division as outlined below:
1. ADA – Americans with Disabilities Act.
2. ANSI – American National Standards Institute.
3. ASTM – American Society of Testing and Materials.
4. CBM – Certified Ballast Manufacturers.
5. ETL – Electrical Testing Laboratories.
6. FAA – Federal Aviation Administration
7. FCC – Federal Communications Commission.
8. FM – Factory Mutual.
9. IEEE – Institute of Electrical and Electronics Engineers.
10. IES – Illuminating Engineering Society.
11. NEC – National Electrical Code.
12. NECA – National Electrical Contractor's Association.
13. NEMA – National Electrical Manufacturer's Association.
14. NFPA – National Fire Protection Association.
15. OSHA – Occupational Safety and Health Act.
16. UL – Underwriters' Laboratories, Inc.
17. Locally adopted building codes and/or other building codes specific to this jurisdiction.
18. Locally adopted electrical codes and/or other electrical codes specific to this jurisdiction.
19. Local utility authorities.
20. Local fire department.

B. Compliance with governing codes and regulations shall be subject to the following guidelines:
1. Drawings and specification requirements shall govern where they exceed governing code and regulation requirements.
2. Where requirements between governing codes and regulations vary, the more stringent shall apply.
3. Nothing contained in contract documents shall be construed as authority or permission to disregard or violate legal requirements. Contractor shall immediately draw the attention of the Project Manager to any such conflicts noted in the contract documents.

1.04 SUBMITTALS

A. Provide six (6) copies of Submittals with descriptive data for all products and materials prior to ordering. Submittals shall clearly identify manufacturer, model number, and any details necessary to show compliance with the specification documents in addition to those parameters outlined below for the following items:
1. Transformers: Weight of transformer, mounting details, and performance data (including impedance, efficiency, and sound level)
2. Switchboards, distribution boards, motor control centers, and panelboards: Dimensions, enclosure data, voltage and phase, ampacity, overcurrent devices (including quantities, ampacity ratings, types, poles, etc.), catalog cuts, and any related accessories.
3. Overcurrent Devices: Including time/current curves.
4. Lighting fixtures: Including photometric performance data and analysis (with parameters outlined) as required by Engineer, fixture poles and mounting arms, ballasts, and lamps.
5. Other Devices and Equipment: Including wall switches, wall-box dimmers, receptacles, device cover plates, safety switches, etc.
6. Special Systems and Equipment: Architectural/theatrical dimming equipment and controls, elevator distribution equipment, emergency power sources and related transfer equipment, transient voltage surge suppressors, sub-metering devices, harmonic filters/suppresents, etc.

B. Shop Drawings: Coordinated layout plans for electrical rooms, information technology rooms, and other specialized areas as requested by the Engineer, showing work of all trades including but not limited to ductwork, HVAC, plumbing, fire protection piping, electrical conduits, bus ducts, and all related equipment.

1.05 SUBSTITUTIONS

A. Procedure: Contractor's bid shall include products as outlined in the specification documents. Except in the case of product unavailability, substitutions will not be allowed. Engineer will consider formal requests for substitution of products only if the request meets the following conditions:.
1. Written evidence of product unavailability necessitating the proposed substation from the specified product's manufacturer representative or supplier.
2. Complete data substantiating compliance of proposed substitution with requirements and specifications stated in Contract documents.
3. Data relating to changes in construction schedule.
4. Complete description of any effect of substitution on other Work in this and other trades.

B. Failure to place orders for specified items in a timely manner (with respect to the Project Manager's construction schedule) does not constitute product unavailability.

C. Contractor shall be responsible at no extra cost to Owner for any changes resulting from proposed substitutions which affect work of other trades or related contracts.

D. Claims for additional costs caused by substitution which may subsequently become apparent shall be met by the Contractor.

E. Substitutions will not be considered for acceptance when acceptance will require substantial revision of Contract Documents, unless Contractor bears cost of redesign.

F. Substitute products shall not be ordered or installed without prior written approval/acceptance by Engineer.

1.06 PRODUCT DELIVERY, STORAGE, AND HANDLING

A. Ship equipment in original packages to prevent damage or entrance of foreign matter. Handle and ship in accordance with manufacturer's recommendations.

B. Provide and maintain protective coverings during construction.

C. Replace, at no expense to Owner, equipment or material damaged, lost, or stolen during storage or handling as directed by the Project Manager.

1.07 FIRE ALARM SYSTEM

A. The fire alarm system shall be provided on a design/build basis by the Contractor. The Contractor shall engage the services of a state-licensed fire alarm manufacturer/installer to prepare all design drawings and calculations required for system approval by the authority having jurisdiction. Submit all plans and provide all permits required for a complete and operable approved fire alarm system.

B. Failure by the fire alarm system designer to produce compete and accurate drawings in a timely manner does not relieve the Contractor of his/her responsibility for providing the fire alarm system per the schedule established by the Project Manager. Contractor shall be responsible for any costs incurred due to delays in contraction caused by the fire alarm system designer/installer. Contractor shall be responsible for any costs incurred due to changes to the fire alarm system design as required by the authority having jurisdiction.

1.08 EXISTING CONDITIONS (AS APPLICABLE)

A. Verification: Before submitting bid, become thoroughly familiar with actual existing conditions and the present installations to which connections must be made or which must be altered. The intent of the work is shown on the drawings and described herein, and no consideration will be granted by reason of lack of familiarity on the part of the Contractor with actual physical conditions, requirements, and practices at the site.

B. Temporary Shutdowns: Shall be performed at no additional charges to Owner. Shutdowns shall be undertaken at times not to interfere with normal operation of existing facilities. Obtain written consent of Owner prior to shutdowns.

C. Alarm and emergency systems shall not be interrupted.

D. Connections to Existing Work: Install new work and connect to existing work with minimum interference to existing facilities. Maintain continuous operation of existing facilities as required with necessary temporary connections between new and existing work. Connect new work to existing work in neat and acceptable manner. Restore existing disturbed work to original condition including maintenance of wiring continuity as required.

E. Removal and Relocation of Existing Work:
1. Disconnect and remove or relocate any electrical equipment and/or devices required by removal or changes in existing construction.
2. Remove conductors from existing raceways to be reused and replace with new conductors.
3. Remove existing conductors no longer used. Remove raceways in all cases except where the removal of the raceway would cause damage to existing construction. Cap and mark as "Abandoned" any unused raceways to remain.
4. Cut and cap abandoned floor raceways flush with concrete floor or behind walls and ceilings.
5. Dispose of all removed raceways and wire.
6. Dispose of removed electrical equipment, lighting fixtures, and devices as directed.
7. Cut and patch existing construction as required. All patching shall be of the same materials, finish, and workmanship as the existing area and shall accurately match all surrounding work to the satisfaction of the project manager.
8. If asbestos insulation is found when working in existing areas, immediately stop work and notify Project Manager. Do not restart work until advised in writing by Project Manager that it is safe to do so following abatement, encapsulations, etc.

PART II – PRODUCTS

2.01 QUALITY ASSURANCE

A. Quality of materials shall be in accordance with the following:
1. Materials shall be new and listed by UL (or similar agency accepted by the authority having jurisdiction) and bearing their label.
2. Materials and equipment of similar application shall be of the same manufacture, unless otherwise noted.
3. Materials shall conform to NEMA, ANSI, and IEEE Standards.

2.02 RACEWAYS

A. Rigid Galvanized Steel Conduit (RGS): Full-weight pipe, galvanized, threaded.

B. Intermediate Metal Conduit (IMC): Lightweight steel pipe, galvanized, threaded.

C. Electrometallic Tubing (EMT): Thin wall pipe, galvanized, threadless.

D. Rigid Nonmetallic Conduit: Schedule 40 PVC.

E. Flexible steel conduit: Standard-wall, galvanized.

F. Flexible aluminum conduit: Standard-wall.

G. Minimum trade size is 1/2" for all rigid and flexible conduits.

2.03 RACEWAY FITTINGS AND ACCESSORIES

A. Rigid galvanized and intermediate metal conduit: Zinc die cast not permitted.

B. Electrometallic tubing: Compression (wet locations) or double set screw type (dry locations only). Galvanized rigid steel elbows, 2 in. or larger.

C. Flexible metallic conduit: Angle wedge type with insulated throat.

D. Bushings: Metallic insulated type.

2.04 BOXES

A. Outlet boxes: Stamped or welded steel, 4 in. square or octagon with appropriate mud ring, except as otherwise required by construction, devices or wiring, as follows:
1. Lighting fixtures: 1-1/2" deep above ceiling, 2-1/8" deep in wall.
2. In wall for receptacles, switches, tele/data devices: 1-1/2" deep.
3. In wall for wall-box dimmers and GFCI receptacles: 2-1/8" deep.
4. With raised covers and fixture studs where required.
5. Through-the-wall type, not permitted.
6. Without fixture or device: Blank cover.
7. Offset back-to-back outlets: Minimum 6 in. separation.

B. Boxes for wet/damp locations: Weatherproof (NEMA 3R), cast metal.

C. In hazardous locations: Cast, copper-free aluminum.

D. Junction and pull boxes: Galvanized sheet steel, screw-on covers, insulated supports for cables, installed only in accessible locations.

E. Floor boxes: galvanized cast iron with brass covers and flanges, suitable for conduit and devices indicated.

F. Exterior Grade-mounted pull boxes: Concrete or composite fiber construction with bolt-down covers. Metallic covers are not permitted.

G. Provide barriers in all boxes between 480Y/277 volt wiring energized from separate services, 208Y/120 volt and 480Y/277 volt wiring, emergency and normal wiring.

2.05 WIRE AND CABLE

A. Conductors: ASTM Standard solid; stranded for #8 AWG and larger.
1. Type: Copper, unless otherwise noted. Contractor shall not substitute Aluminum for any branch circuits. Contractor may substitute Aluminum for feeders sized #1/0 AWG or larger only with written consent of Engineer.
2. Size, for general use:
a. #12 AWG minimum for all circuits 120V or more.
b. For 20A/1P 120V branch circuits over 70 feet in total length: #10 AWG throughout entire circuit.
c. For 20A/1P 120V branch circuits over 110 feet in total length: #8 AWG for homerun, #10 AWG throughout remainder of circuit.
d. For 20A/1P 277V branch circuit homeruns over 160 feet in length: #10 AWG throughout entire circuit.
e. For 20A/1P 277V branch circuits over 260 feet in length: #8 AWG for homerun, #10 AWG throughout remainder of circuit.
3. Size, for control and alarm: #14 AWG minimum, except for 120V circuits or circuits over 200 feet in length provide #12 AWG minimum.
4. Other voltages and phases: Branch circuit size adjusted as required to maintain voltage drop below 3% (feeders below 2%).
5. Where branch circuits or feeders have been adjusted for voltage drop, increase raceway sizes for larger wire as required. Equipment grounding conductor to be resized to correspond to the normal ampacity of the new feeder size.

B. Insulation:
1. THWN/THHN: Feeders and branch circuits except as noted.
2. SFF-2: Branch circuits located in wiring channels of continuous fluorescent fixtures or where ambient temperatures exceed 90°C.
3. Type NM ("Romex") cable not allowed.
4. Color coding: Conductors shall be color coded to differentiate the phases, the same color code being assigned to the same phase throughout the project.
5. Rating: All conductors have been sized based upon 75° C temperature rating (NEC Table 310.16).

C. Metal Clad (MC) Cable: For branch circuits in dry locations, walls, hung ceilings, and furred spaces to branch distribution box only. Not allowed for homeruns.

D. Tags: Provide tags in accessible locations for all feeders, made of fiberproof linen or fiber, indicating feeder size, phase, and points of origin and terminations.

E. Terminations, splices and taps under 600V:
1. Copper conductors #10 AWG and smaller: With compression-type of twist-on spring-loaded connectors and nylon-insulated covering.
2. Copper conductors #8 AWG and larger: Mechanical bolted pressure or hydraulic-compression type using manufacturer's recommended tooling.
3. Cable lugs and connectors: Compression type of same metal as conductor. Provide to match cable, with marking indicating size and type.

2.06 DEVICES

A. Local wall switches: Heavy duty, toggle, or rocker quiet type, 20A, 120/277VAC, coordinate with architect for finish color.

B. Dimmer switches: Slider type, sized per total controlled load or as indicated, coordinate with architect for finish color.

C. Receptacles:
a. Duplex convenience: NEMA 5-20R unless otherwise noted, GFCI-type where indicated or required by code, coordinate with Architect for finish color.
b. Single: NEMA 5-20R unless noted otherwise, coordinate with Architect for finish color.
c. Special Use: NEMA types and ratings as indicated on drawings or as required to match cord cap of equipment.

D. Device Plates: Verify type with Architect.

E. Weatherproof Device Covers: For receptacles installed outdoors, provide NEMA 3R, cast metal, lockable, "in-use" type covers.

2.07 LOW VOLTAGE DISTRIBUTION EQUIPMENT

A. Disconnect Switches:
1. Fused or nonfused as noted.
2. Voltage as required for application.
3. Ampacity as required for application (minimum size shall be 125% of full-load amps of equipment served, unless otherwise noted).
4. Heavy duty, unless otherwise noted.
5. Horsepower rated for motor loads.
6. Toggle Type: Non-fused, maximum rating of 20A at 600V or 30A at 250V, use only when full-load amps of load does not exceed 80% of switch rating.
7. Knife-blade Type: Load break, quick-make-quick-break, UL Class R up to 600V, maximum rating 800A except as noted, arc quenchers, individually mounted except as noted.

B. Fuses:
1. Match existing where applicable.
2. For motor and transformer loads: Current limiting, dual element, time delay type, 200,000 AIC, equal to Bussmann Fusetron FRN or FRS or Lo-Peak LPN or LPS (UL Class R), voltage ratings to suit applications, amp ratings per plans, unless otherwise noted.
3. For other loads: Current limiting, fast acting type, 200,000 AIC, equal to Bussmann Limitron KTN, KTS, or KTU (UL Class R, up to 600A; Class L, over 600A), unless otherwise noted.
4. All fuses shall be of the same manufacturer.
5. Supply 1 spare matching fuse for each set of 3 installed.

C. Circuit Breakers:
1. General Requirements: Thermal-magnetic, quick-make-quick-break, manually operated with insulated trip-free handle, multi-pole types with internal trip bar, terminals UL listed for 75° C, suitable for copper or aluminum, HACR-rated to suit application, manufacturer to match equipment.
2. Short Circuit Interrupting Capacity:
a. Size to match equipment AIC rating indicated on diagrams and schedules.
b. Series-rated Combinations: AIC ratings on drawings are based upon fully-rated equipment. Series-rated equipment is allowed where accepted by authority having jurisdiction.

D. Motor Controllers/Starters:
1. Manual Motor Controllers: 600VAC heavy duty rated, single- or multi-pole to suit application, mounted in suitable NEMA enclosure, horsepower rated to suit motor to be controlled, H-O-A or start-stop operation as needed for application.

E. Branch Circuit Panelboards:
1. General Requirements:
a. Provide factory-assembled, enclosed panelboards with doors, surface-mounted or recessed as indicated.
b. Provide feeder terminal lugs for both main breakers and main lugs, rated for use with copper or aluminum cables as required.
c. All door locks shall be keyed alike.
d. Provide separate hinged and lockable doors for main contactor compartments as required.
e. AIC rating for panel bus shall be as indicated on drawings.
f. Panel bus may be copper or aluminum.
g. Provide control transformer for the shunt trip element in the panelboard enclosure as required.
h. Provide circuit directory consisting of metal frame with transparent plastic cover. Provide typewritten list indicating circuit numbers and loads to match actual "as-built" conditions (to correspond with project record drawings).
2. Acceptable Manufacturers: Square D, Siemens, General Electric, and Cutler-Hammer.

F. Distribution Boards and Switchgear:
1. General Requirements:
a. Provide all devices as required and as shown on drawings for necessary interconnection, instrumentation, and control wiring per manufacturer's recommendations, whether specifically indicated on drawings or not.
b. Provide aluminum or copper bus, rated at 100% of main bus capacity throughout all sections.
c. Provide each section rated to 80% of sum of switch ratings in that section, minimum.
d. Provide neutral rated at 100% of mains, unless otherwise noted.
e. Provide ground bus of 98% conductivity copper rated at 25% of mains, unless otherwise noted. In service switchboards only connect to neutral bus as indicated on drawings.
f. Provide short circuit bracing rated in symmetrical RMS amperes, capacity as noted on drawings.
g. Provide ground fault protection in accordance with NEC requirements (215.10, 230.95, 240.13), IEEE Standards (142, 241, 242)
h. Provide microprocessor based LCD display electronic metering, phase selectable with current for each phase and neutral, voltage (line-to-line and line-to-neutral), watts, VARs, VA, power factor, power factor during the last demand interval, watt-hours, watts demand, and peak watts demand. Display shall be user-selectable for automatic or manual scrolling.
i. In incoming service equipment, provide space for utility PT's and CT's as indicated on the drawings and as required by serving utility. Verify metering requirements with the serving utility prior to ordering equipment.
2. Acceptable Manufacturers: Square D, Siemens, General Electric, and Cutler-Hammer.

G. Transformers:
1. Type: Open ventilated, dry type, capacity as indicated on drawings, Class H, 150°C insulation (80°C winding rise), with separate primary and secondary windings, non-standard K-rating as indicated on drawings.
2. Primary taps: Four (4) 2.5%, two each above and below rated voltage.
3. Noise level: In accordance with NEMA ST-20.
4. Acceptable Manufacturers: Square D, Siemens, General Electric, and Cutler-Hammer.

H. Sub-Tenant Metering Device:
1. Meter shall be certified to ANSI C12.1 metering standards.
2. Electronic with LCD display for kilowatt hours, kilowatts demand, and kilowatts peak date and time.
3. Meter to interface with load being measured with direct voltage tap (to correspond with the voltage of the load being measured) and utilizing current transformers.

I. Enclosures: Dead Front, NEMA Type 1 (indoor) or NEMA Type 3R (outdoor), unless otherwise noted. All equipment shall have sufficient gutter space to accommodate the the quantity and size of conductors required. Contractor shall provide listed oversized enclosures where required.

J. Temperature Rating: All low-voltage distribution equipment shall be rated for 75° C, no exceptions.

K. Nameplates: Provide nameplates for all disconnect switches, enclosed circuit breakers, panels, cabinets, transformer enclosures, motor controllers, distribution boards, and switchboards. Nameplates shall be fastened with epoxy cement, engraved black background with 3/4" white lettering, inscription indicating equipment and voltage.

2.08 LUMINAIRES

A. Provide fixtures, components, and lamps as specified in the drawings.

B. Fixture catalog numbers used to illustrate equipment type do not necessarily denote required mounting equipment or accessories. It is the contractor's responsibility to provide fixture mounting types to suit application and to provide required accessories to suit.

C. Fluorescent Ballasts:
1. Fluorescent Electronic Ballasts: Shall meet the following requirements:
a. Instant start for applications utilizing standard single-pole switch control or unswitched (continuous burn) applications.
b. Programmed start for applications utilizing automatic controls such as occupancy sensors, motion detectors, daylight sensors (non-dimming only), etc.
c. End-of life sensing for fixtures utilizing T4 and T5 lamps.
d. Minimum power factor of 0.90.
e. Highest ballast factor available, unless noted otherwise.
f. Lamp current crest factor of less than 1.7.
g. Constant light output for input voltage variations of +/- 10%.
h. Class A sound rating.
i. Starting temperature of 0°F.
j. Lamp frequency of greeter than 40 kHz, with the following exceptions:
(1) Where 40 kHz is not available for the specified lamp type or luminaire, provide 20 kHz ballast.
(2) Where installed within 10 feet of high-frequency power line carrier (PLC), provide 20 kHz ballast.
(3) Where installed within 25 feet of IR remote control devices, provide 20 kHz ballast.
2. Fluorescent Electronic Dimming Ballasts: Shall meet the following requirements:
Ballasts shall be compatible with the selected control equipment. Contractor shall verify compatibility with product (lamp and dimming system) suppliers prior to ordering.
For architectural dimming applications, use full range (1% to 100%) dimming ballasts.
For daylight harvesting applications requiring dimming, partial range (20% to 100%) dimming ballasts.

D. Lighting Control System:
1. Provide lighting control system components as specified on the drawings. Contractor shall be responsible to provide all components for a complete and operable system per manufacturer's requirements, whether all components are specified in the drawings or not. Coordinate commissioning requirements with lighting designer and/or engineer as required.

E. Lamps: Provide as specified in the drawings and to suit application.

PART III – EXECUTION

3.01 INSTALLATION

A. General Requirements:
1. DO NOT SCALE ELECTRICAL DRAWINGS. Verify exact locations of all fixtures, devices, boxes, raceways, and other equipment with the drawings of architects, interior designers, and all other consultants. Each device and fixture height shall be verified with others' dimensioned drawings (including millwork shop drawings) to ensure proper height and location. Contractor shall verify the exact location of all mechanical equipment and all other equipment requiring electrical connection prior to rough-in.
2. The contract drawings indicate the general arrangements for the electrical systems. Prior to installation, contractor shall review the complete set of construction documents for conflicts with other trades. Drawings are diagrammatic and do not indicate all obstructions, offsets, mechanical duct or piping conflicts, or structural conditions that may affect the installation. Due to these or other legitimate reasons, the contractor may decide to install the work indicated in a manner different from that shown. Such changes shall be presented for review and approval from the Project Manager prior to proceeding. Upon approval, the work shall be performed and the record drawings prepared to accurately reflect the work as actually installed. Any required changes shall be performed at no cost to the Owner, except in extreme cases which may be considered by the Project Manager on a case-by-case basis.
3. In all cases, manufacturer's drawings, details, and/or instructions shall be followed for all equipment and devices installed. In cases of conflict with these drawings and specifications, the manufacturer's recommended installation methods shall take precedence.
4. Thoroughly clean items before installation. Cap openings during construction to prevent infiltration of dirt and other foreign objects until final connections have been made.
5. Contractor shall be responsible for all anchors, supports, and connections of electrical work to the building structure to prevent damage as a result of an earthquake, including manufactured equipment and the connection and integrity of shop fabricated and field fabricated materials and equipment. All supports, equipment, and connections shall be designed to conform to requirements of the governing codes and authority having jurisdiction.
6. All equipment shall be securely fastened to building construction with approved supports. All work shall be properly supported from building structure and/or framing in an approved manner and independent of the ceiling support system. Where overhead construction does not permit direct fastening of supports, furnish additional framing.

B. Raceways, Wire, and Related Cables:
1. Routing of raceway systems as shown is diagrammatic. Actual location and routing of all raceways shall be determined by contractor to suit field conditions.
2. Raceways shall be installed concealed, except in areas out of public view, equipment rooms, and other similar areas, or where conditions render concealment impractical. Where exposed, install parallel with or at right angles to walls. Where installed in masonry, run vertically only.
3. Rigid steel and intermediate metallic conduit shall be permitted for use with feeders and branch circuits. In exposed areas where subject to physical damage, use only rigid galvanized steel conduit.
4. EMT shall be permitted for use with feeders and branch circuits, and may be installed in wet locations (above grade), dry locations, walls, hung ceilings, hollow block walls, and furred spaces.
5. Flexible steel conduit: Use for branch circuits only.
a. Permitted uses: Dry locations (except as noted), in walls, hung ceilings, and furred spaces, for short connections where rigid conduit is impracticable, from outlet box to a recessed lighting fixture (maximum 6 ft. length).
b. Required uses: For final connection to motor terminal box, transformers and other vibrating equipment (with polyvinyl sheathing where installed in wet locations), for expansion joint crossings (cross at right angles and anchor ends, minimum length 18" with slack).
6. Where allowed by code, MC cable may be installed. Where multiple cables are routed adjacent to each other (bundled), a minimum separation of one (1) cable diameter (largest) shall be maintained throughout the length of the run, otherwise contractor shall be responsible for derating cables as required by code. Plastic cable ties shall not be used as means of support.
7. Supports: Use ceiling trapeze, strap hangers or wall brackets (maximum loading 75% of rating). Use U-bolts at each floor level of riser raceways, connected to acceptable supports. For grouped lines and services, use trapeze hangers of bolted angles or channels. Secure raceways to supports with pipe straps or u-bolts, spaced minimum 10 feet on centers for metallic raceway and as required for nonmetalic raceway, or per code. Where building construction is inadequate provide additional framing.
8. Maintain grounding continuity of interrupted metallic raceways with ground conductor, and in flexible conduit for feeders and motor terminal connections.
9. Ream ends of metallic conduits prior raceway system assembly.
10. No raceway shall contain more than nine (9) current-carrying conductors unless otherwise noted. Where multiple conductors (in excess of three) are indicated on these drawings, they have been derated as required by code. Up to three homeruns for 20A/1P #12 AWG branch circuits may be combined into a single conduit homerun (neutrals may not be shared). In all other cases, contractor shall not combine home run conduits into one conduit without authorization from Engineer.
11. Where more than one conduit terminates in a junction box, contractor shall identify each conduit and junction box in a manner allowing identification after all wall finishes have been applied.
12. Provide fish or pull wire, galvanized or nylon rope in all empty raceways over 10 feet long.
13. Sleeves: Furnish and set all sleeves for passage of conduit through walls, roof, floors, and elsewhere as required for proper protection of each conduit passing through building surfaces.
14. Separate raceways for conductors of 208Y/120 and 480Y/277 volt systems, except 480 volt motor branch circuit wiring and related 120 volt control wiring.

C. Outlet and Pull Boxes:
1. Set boxes square and true with building finish.
2. Secure to building structure by adjustable strap irons or grout in with masonry.
3. Verify outlet locations in finished spaces with architectural drawings of interior details and finishes.
4. Provide barriers between switches connected to different phases for voltages exceeding 150 volts to ground.
5. Conceal junction and pull boxes in finished spaces, only in accessible locations.
6. Outlet boxes for fixtures recessed in hung ceilings: Accessible through opening created by removal of fixture. Secure to block iron ceiling support.
7. Outdoor installation: Weatherproof except as noted; below grade, waterproof.
8. Contractor shall be responsible for correct size and installation of all outlet, pull, and junction boxes in accordance with NEC 314.16.

E. Switchboards, Distribution Boards, Panelboards, and Transformers:
1. Balance the load over phases when new circuits are added to new or existing panelboards (if any).
2. Update directories on existing panelboards where circuiting is changed.
3. Tests: Open and close load break switching devices under load.
4. All floor-mounted equipment shall have a 3" high housekeeping pad, extending 3" or less outside the equipment footprint in all directions (except for rear of switchboards and distribution boards that are not rear-accessible).
5. All equipment shall be installed to meet NEC 110.26 required clearances.
6. Contractor shall verify with project Structural Engineer (or retain the services of a licensed Structural Engineer) to provide any mounting diagrams or calculations required to verify mounting of any wall- or trapeze-mounted transformer prior to rough-in. Any related costs shall be the responsibility of the Contractor.

F. Luminaires:
1. Refer to architectural reflected ceiling plan(s) or lighting design drawings for exact location of all ceiling-mounted lighting fixtures. Architectural drawings or lighting design drawings shall govern in case of conflict with Electrical lighting drawings.
2. Recessed fixtures in fire-rated ceilings and supply air plenums shall be approved for the fire rating of the ceiling or shall be fully enclosed in a fire-rated housing acceptable to the authority having jurisdiction.
3. Seal all opening to eliminate air leaks.
4. Verify type of mounting required for all lighting fixtures and provide all mounting hardware as required for a complete installation.
5. All adjustable fixtures shall be properly aimed as directed by the Architect or lighting designer. Aiming of building facade lighting (if any) shall be performed at night if required by Architect or lighting designer.
6. All fluorescent lamps installed in fixtures with dimmable ballasts shall be burned at full power for a minimum of 24 hours prior to any system dimming tests or commissioning.

G. Grounding:
1. Grounding connections shall be made with approved connectors only.
2. In inaccessible locations, make connections by exothermic weld process.
3. Provide #6 AWG ground for all communications circuits (at terminal boards and similar equipment locations) in accordance with NEC 800.40.
4. Provide grounding for all separately derived systems per NEC 250.30 requirements.

H. Motors:
1. Where motors are installed in hung ceilings, contractor shall provide disconnecting means in hung ceiling within reach from access point.
2. Sizing of motor-related electrical components, including feeder and/or branch circuits (wire and conduit) and overcurrent protection (breaker and/or fuses) is based upon ratings indicated in the contractor documents as well as NEC approximated loads for a given motor horsepower, voltage, and phase. It is the contractor's responsibility to verify actual motor and appliance rating and loads and to provide correctly-sized motor-related electrical components. Where equipment overcurrent protection is rated only for fuses, the contractor shall provide a fused disconnect with fuses sized per manufacturer's recommendations, whether specifically indicated on the drawings or not. Reflect all changes in the record drawings.

I. Penetration of Fire-Rated Construction:
1. All penetrations of fire-resistive floors or shaft walls shall be protected by materials and installation details that conform to U.L. listing for "Through-Penetration Fire Stop Systems".

J. Fire/Smoke Dampers: Verify exact locations with mechanical drawings. Provide line voltage motor connections and local disconnect switches as required. Provide duct and/or area smoke detectors as required for actuation of damper motors.

K. Signage: Provide all signage required by codes and authorities having jurisdiction.

L. Access Doors/Panels: Provide concealed outlet boxes, junction/pull boxes, and equipment requiring access with adequately sized access doors/panels. In removable type ceiling, provide accurate identification only. Where access locations are not defined in these or other documents, coordinate access points with the General Contractor and/or Architect.

L. Fire Alarm System:
1. Prior to installation of fire alarm system, the Contractor shall submit fire alarm system design for review by the Engineer for verification of special power and/or low-voltage requirements related to the Electrical contract documents.
2. All new fire alarm system devices shall be connected to the existing base building fire alarm system where applicable. New devices must be from the same manufacturer as the existing system (if any).
3. Upon completion of installation of fire alarm system wiring and devices, a performance test of entire fire alarm system shall be performed to the satisfaction of the authority having jurisdiction.

3.02 PROJECT CLOSE-OUT

A. All electrical systems shall be tested for proper operation. If tests show that work is defective, contractor shall make all necessary corrections at no cost to owner.

B. Upon completion of the fire alarm system's installation, the system installer shall conduct a thorough test of the system to the satisfaction of the authority having jurisdiction and submit a written report of the finding to the project manager.

C. After final operation for inspection and acceptance, deliver all copies of operation instructions, maintenance manuals and parts descriptions to the Architect.

D. All tools supplied with the equipment for maintenance shall be tagged and temporarily secured to the unit, or turned over to the Owner.

07-1993
Clark County Dev. Services
Building Services Division
AUG 06 2007
Reviewed and Accepted
Willdan

ELECTRICAL SPECIFICATIONS SHEET

THIS DRAWING IS AN INSTRUMENT OF SERVICE BETWEEN THE ARCHITECT AND HIS CLIENT, BUT REMAINS THE PROPERTY OF THE ARCHITECT.
© ALL RIGHTS RESERVED 2005

architecture/engineering/site
GARY GUY WILSON
7625 South Industrial Road, Suite#100
Las Vegas, Nevada 89139

planning/interior design
STUDIOS...
(702)876-0668
professional corp / certified n.c.a.r.b.
4175 South Riley Street
Las Vegas, NV 89147
Tel: 702.873.0670
Fax: 702.873.1098
www.shnevada.com
MEP: SH NEVADA

CONSULTANTS:
CIVIL: CIVILWORKS, INC.
STRUCTL: WRIGHT ENGINEERS

ELECTRICAL SYMBOLS LEGEND, GENERAL NOTES, ABBREVIATIONS & SHEET INDEX

CARL'S JR RESTAURANT
@ RUSSELL ROAD & EASTERN AVE.
McCARRAN MARKETPLACE
FOR: S.L. INVESTMENTS, MR. STEVE LARSON
CLARK COUNTY, NEVADA

PROJ.NO.	13520701.00
PROJ.ARCH.	G.G.WILSON,AIA
PROJ.MGR.	MVM
JOB CAPT.	MVM
TECH'N	
ARCH.CHK.	GGW
PH-2/3	02FEB07
PH-4	30MAR07
PH-5	02MAY07

REVISIONS

PRINTS REQUIRE ARCHITECT'S SEAL & SIGN. FOR PROOF OF VALIDITY

PROFESSIONAL ENGINEER STATE OF NEVADA
DAVID O. BRANTLEY
EXPIRES 12/31/08
ELECTRICAL
No.7581

LV070018

SHT.NO. E-0.1

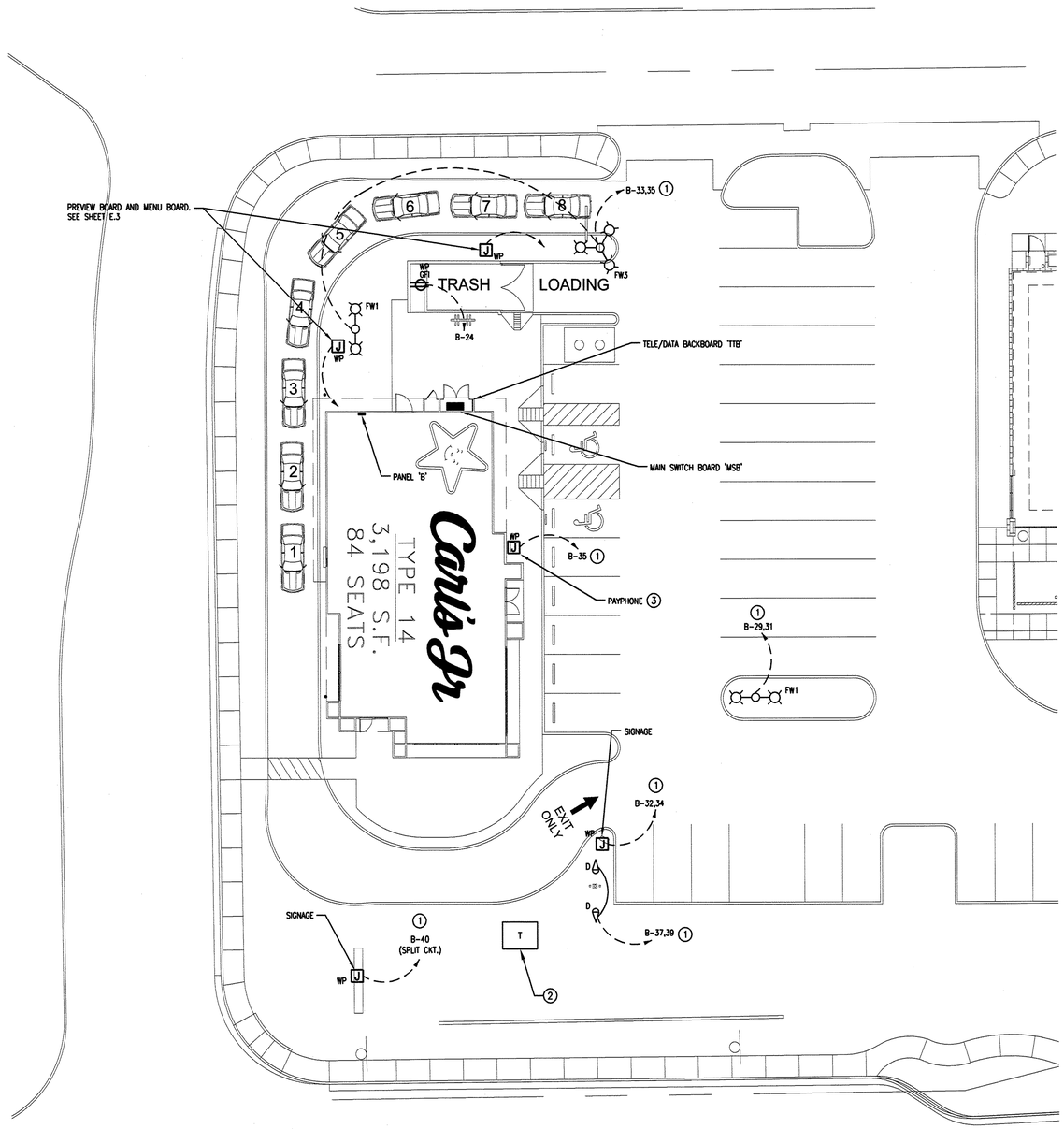

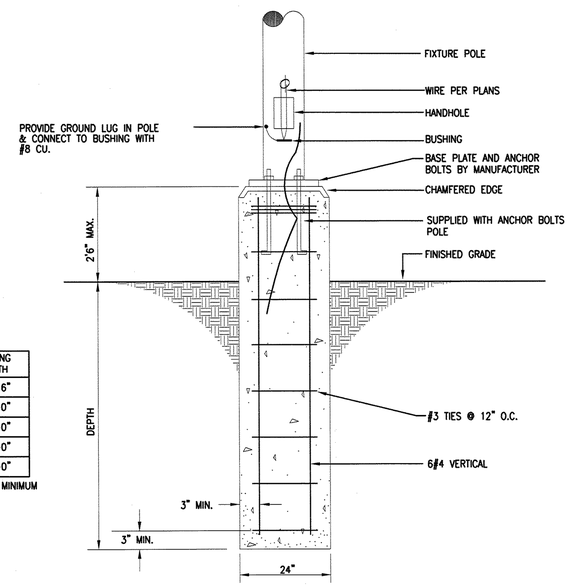

POLE HEIGHT	FOOTING DEPTH
8'	2'-6"
12'	3'-0"
20'	4'-0"
30'	5'-0"
40'	6'-0"

CONCRETE 4500 PSI MINIMUM

2 POLE BASE DIAGRAM

TSONE

KEY NOTES

1. ROUTE CIRCUIT VIA PHOTOCELL/LIGHTING CONTACTOR. VERIFY WITH ARCHITECT/OWNER PRIOR TO START OF WORK.
2. PROPOSED NPCO TRANSFORMER LOCATION. CONTRACTOR SHALL PROVIDE PAD AND TRAFFIC BARRIER AS REQUIRED BY NPCO.
3. PROPOSED PAYPHONE LOCATION. VERIFY EXACT LOCATION WITH ARCHITECT/OWNER PRIOR TO ROUGH-IN. ROUTE 1"C WITH 2-CAT. 5E CABLES TO TEL/DATA BACKBOARD 'TTB', (VERIFY WITH OWNER).
4. PROPOSED PANEL LOCATION. VERIFY EXACT LOCATION WITH ARCHITECT/OWNER PRIOR TO ROUGH-IN.

POLE BASE DIAGRAM GENERAL NOTES

1. POLE BASE INSTALLATION SHALL COMPLY WITH CITY OF NORTH LAS VEGAS AND ANY ADDITIONAL REQUIREMENTS OF THE AUTHORITY HAVING JURISDICTION.
2. PROVIDE CONCRETE POLE BASES FOR ALL LIGHTING FIXTURES. CONTRACTOR SHALL BE RESPONSIBLE TO ATTAIN A NEVADA LICENSED ENGINEER TO VERIFY DIMENSIONS SHOWN AND PROVIDE STRUCTURAL DESIGN SERVICES IF REQUIRED BY THE AUTHORITY HAVING JURISDICTION. INCLUDE DESIGN FEES IN BASE BID. INSTALL FIXTURES PER NEC 210.23(B) AND NEC 410.

07-19913
Clark County Dev. Services
Building Services Division
AUG 06 2007 DL
Reviewed and Accepted
Wilidan

ELECTRICAL SITE PLAN SC: 1/16"= 1'-0" 1

THIS DRAWING IS AN INSTRUMENT OF SERVICE BETWEEN THE ARCHITECT AND HIS CLIENT, BUT REMAINS THE PROPERTY OF THE ARCHITECT.
© ALL RIGHTS RESERVED 2005

architecture/engineering/site
GARY GUY WILSON AIA
7625 South Industrial Road, Suite#100
Las Vegas, Nevada 89139
planning/interior design
STUDIOS...
(702)876-0668
professional corp / certified n.c.a.r.b.
MEP:
SH NEVADA
4175 South Riley Street
Suite 200
Las Vegas, NV 89147
Tel: 702.873.0670
Fax: 702.873.1098
www.shnevada.com
CONSULTANTS:
CIVIL: CIVILWORKS, INC.
STRUCTL: WRIGHT ENGINEERS

CARL'S JR RESTAURANT
@ RUSSELL ROAD & EASTERN AVE.
McCARRAN MARKETPLACE
FOR: S.L. INVESTMENTS, MR. STEVE LARSON
CLARK COUNTY, NEVADA

PROJ.NO.	13520701.00
PROJ.ARCH.	G.G.WILSON,AIA
PROJ.MGR.	MVM
JOB CAPT.	MVM
TECH'N	.
ARCH.CHK.	GGW
PH-2/3	02FEB07
PH-4	30MAR07
PH-5	02MAY07

REVISIONS
1. ..

PRINTS REQUIRE ARCHITECT'S SEAL & SIGN. FOR PROOF OF VALIDITY

DAVID O. BRANTLEY
EXPIRES 12/31/08
ELECTRICAL
No.7581
PROFESSIONAL ENGINEER STATE OF NEVADA

LV070018

ELECTRICAL SITE PLAN

SHT.NO. E-1

PANEL:	A	PANEL(S) SUB-FED FROM	CIRCUIT TYPE KEY
LOCATION:	KITCHEN - CARL'S JR	THIS PANEL	L = LIGHTS
VOLTS L-L:	208	NONE	R = RECEPTACLES
PHASE:	3		M = MOTOR
WIRES:	4	NOTES:	H = PACKAGED HVAC
BUS AMPS:	225A	SEE ANSUL ALARM WIRING	K = COMMERCIAL KITCHEN LOADS
MAIN:	LO	DIAGRAM FOR SHUNT	G = HOTEL GUESTROOM LIGHTING
AIC RATING:	10,000	TRIP BREAKER CONTROL	E = ELEVATOR
MOUNTING:	SURFACE	WIRING.	X = OTHER THAN ABOVE (NON-CONTINUOUS LOAD)
ENCLOSURE:	NEMA 1		
TOTAL CKTS:	42		

CIRCUIT DESCRIPTION KEY: S = SPARE; 0 = SPACE; G = GFCI CB; A = AFCI CB; X = PART OF MULTI-POLE CKT; E = EXISTING LOAD AND CB; M = MODIFIED LOAD, EXISTING CB; R = EXISTING LOAD REMOVED, CB SPARE; N = NEW LOAD AND CB

CIRCUIT #	TYPE	CB A / P	CIRCUIT DESCRIPTION	CONNECTED LOAD (VA)	PHASE	CIRCUIT DESCRIPTION	CB A / P	CIRCUIT TYPE	CIRCUIT #
1	K	20 / 1	TRASH COMPACTOR	1200	A	200 MUSIC SYSTEM	20 / 1	R	2
3	K	20 / 1	SALSA BAR	480	B	540 OFFICE, MTB SPRINKLER	20 / 1	R	4
5	L	20 / 1	FLY LIGHTS	300	C	800 CARBONATOR 1	20 / 1	K	6
(2) 7	X	20 / 1	HVAC SMOKE DETECTOR	400	A	800 CARBONATOR 2	20 / 1	K	8
(13) 9	X	20 / 1	ROOF DRAIN HEAT TRACE	1000	B	400 INTRUSION ALARM	20 / 1	X	10 (2)
11	X	20 / 1	REST RM AUTO FLUSH	200	C	1890 SHOW WINDOW	20 / 1	L	12
13	L	20 / 1	SHOW WINDOW	1890	A	1890 SHOW WINDOW	20 / 1	L	14
15	L	20 / 1	SHOW WINDOW	1890	B	1890 SHOW WINDOW	20 / 1	L	16
17	L	20 / 1	SHOW WINDOW	1890	C	1890 SHOW WINDOW	20 / 1	L	18
19		20 / 1	S		A	S	20 / 1		20
21		20 / 1	S		B	S	20 / 1		22
23		20 / 1	S		C	S	20 / 1		24
25		20 / 1	S		A	200 ATM	20 / 1	R	26 (10)
27	K	30 / 2	MALT MACHINE	2153	B	S	20 / 1		28
29	K		X	2153	C	S	20 / 1		30
(10) 31	R	20 / 1	OFFICE, COMPUTER	540	A	50 IRRIG. CONTROLLER	20 / 1	X	32
(14)(10) 33	R	20 / 1	OFFICE, COMPUTER	540	B	S	20 / 1		34
(14)(10) 35	R	20 / 1	ORDER SYSTEM MONITOR	1500	C	S	20 / 1		36
(10) 37	R	20 / 1	POS CASH REGISTER	1200	A	S	20 / 1		38
(10) 39	X	20 / 1	SAFE	200	B	400 FIRE ALARM PANEL	20 / 1	X	40
(10) 41	R	20 / 1	SOS PRINTER, WIRELESS	1500	C	400 FIRE ALARM PANEL	20 / 1	X	42
			TOTALS (THIS PANEL):	A	B	C TOTAL DEMAND LOAD (KVA)*:		31	
			CONNECTED LOAD PER PHASE (VA):	8370	9493	12523 TOTAL DEMAND LOAD (A)*:		87	
			CONNECTED LOAD PER PHASE (A):	70	79	104 *NOTE INCLUDES SUB-FED LOADS (IF ANY)			

PANEL:	B	PANEL(S) SUB-FED FROM	CIRCUIT TYPE KEY
LOCATION:	KITCHEN - CARL'S JR	THIS PANEL	L = LIGHTS
VOLTS L-L:	208	NONE	R = RECEPTACLES
PHASE:	3		M = MOTOR
WIRES:	4		H = PACKAGED HVAC
BUS AMPS:	225A		K = COMMERCIAL KITCHEN LOADS
MAIN:	LO		G = HOTEL GUESTROOM LIGHTING
AIC RATING:	10,000		E = ELEVATOR
MOUNTING:	SURFACE		X = OTHER THAN ABOVE (NON-CONTINUOUS LOAD)
ENCLOSURE:	NEMA 1		
TOTAL CKTS:	42		

CIRCUIT DESCRIPTION KEY: S = SPARE; 0 = SPACE; G = GFCI CB; A = AFCI CB; X = PART OF MULTI-POLE CKT; E = EXISTING LOAD AND CB; M = MODIFIED LOAD, EXISTING CB; R = EXISTING LOAD REMOVED, CB SPARE; N = NEW LOAD AND CB

CIRCUIT #	TYPE	CB A / P	CIRCUIT DESCRIPTION	CONNECTED LOAD (VA)	PHASE	CIRCUIT DESCRIPTION	CB A / P	CIRCUIT TYPE	CIRCUIT #
1	R	20 / 1	DINING WINDOW RECEPTS	1400	A	576 LTS - SERVING ORDER	20 / 1	L	2
3	L	20 / 1	LTS - PENDANTS	200	B	1260 LTS - KITCHEN	20 / 1	L	4
5	L	20 / 1	LTS - MAIN DINING	1080	C	400 LTS - REST RM, EXH FAN	20 / 1	L	6
7	L	20 / 1	LTS - MAIN DINING	1080	A	1000 WALK-IN COOLER EVAPORATOR	20 / 1	X	8
9	L	20 / 1	LTS - SALAD BAR	1600	B	900 SCULLERY, OFFICE, CREW	20 / 1	X	10
11	L	20 / 1	LTS - WALK-INS, OFFICE, CREW	620	C	400 LTG CONTROL PANEL 'LCP'	20 / 1	L	12
13	X	20 / 1	SERVING, ROOF, BELL	1080	A	1000 LTS - EXT AWNINGS	20 / 1	L	14
15	X	20 / 1	SALAD BAR UNIT	1000	B	1450 LTS - EXT AWNINGS, BRACKETS	20 / 1	L	16
17		20 / 1	SPARE		C	800 LTS - EXT SOFFITS	20 / 1	L	18
19	X	20 / 1	FLY FANS-DRIVE, BACK DOOR	1000	A	900 SANITIZER	20 / 1	X	20
21	L	20 / 1	LTS - EXT SECURITY	1350	B	SPARE	20 / 1		22
23	L	20 / 1	LTS - EXT BLDG SIGNS	1490	C	600 TRASH ENCLOSURE, PAY PHONES	20 / 1	X	24
25	L	20 / 1	LTS - EXT BLDG SIGNS	1490	A	480 LTS - EMERGENCY N.L., EXTS	20 / 1	L	26 (2)
27		20 / 1	SPARE		B	1400 MAIN MENUBOARD, SOFFIT SIGNS	20 / 1	L	28
29	L	20 / 2	LTS - EXT PARKING LOT (IF REQD)	1800	C	400 HEAD SET CHARGER	20 / 1	X	30
31	L		- X -	1800	A	600 LTS - EXT MONUMENT SIGN	20 / 1	L	32
33	L	20 / 2	LTS - EXT PARKING LOT	1800	B	600 LTS - EXT MONUMENT SIGN	20 / 1	L	34
35	L		- X -	1800	C	1500 LTS - PLAY ROOM (IF REQUIRED)	20 / 1	L	36
37	L	20 / 2	LTS - FLAG POLE	1800	A	900 DRIVE-THRU PRE, MENU, SPEAKER	20 / 1	X	38
39	L		- X -	1800	B	300 DRIVE-THRU DIRECTION SIGNS	20 / 1	X	40
41		20 / 1	SPARE		C	SPARE	20 / 1		42
			TOTALS (THIS PANEL):	A	B	C TOTAL DEMAND LOAD (KVA)*:		47	
			CONNECTED LOAD PER PHASE (VA):	15106	13660	10890 TOTAL DEMAND LOAD (A)*:		131	
			CONNECTED LOAD PER PHASE (A):	126	114	91 *NOTE INCLUDES SUB-FED LOADS (IF ANY)			

PANEL:	C	PANEL(S) SUB-FED FROM	CIRCUIT TYPE KEY
LOCATION:	KITCHEN - CARL'S JR	THIS PANEL	L = LIGHTS
VOLTS L-L:	208	NONE	R = RECEPTACLES
PHASE:	3		M = MOTOR
WIRES:	4	NOTES:	H = PACKAGED HVAC
BUS AMPS:	225A	SEE ANSUL ALARM WIRING	K = COMMERCIAL KITCHEN LOADS
MAIN:	LO	DIAGRAM FOR SHUNT	G = HOTEL GUESTROOM LIGHTING
AIC RATING:	10,000	TRIP BREAKER CONTROL	E = ELEVATOR
MOUNTING:	SURFACE	WIRING.	X = OTHER THAN ABOVE (NON-CONTINUOUS LOAD)
ENCLOSURE:	NEMA 1		
TOTAL CKTS:	42		

CIRCUIT DESCRIPTION KEY: S = SPARE; 0 = SPACE; G = GFCI CB; A = AFCI CB; X = PART OF MULTI-POLE CKT; E = EXISTING LOAD AND CB; M = MODIFIED LOAD, EXISTING CB; R = EXISTING LOAD REMOVED, CB SPARE; N = NEW LOAD AND CB

CIRCUIT #	TYPE	CB A / P	CIRCUIT DESCRIPTION	CONNECTED LOAD (VA)	PHASE	CIRCUIT DESCRIPTION	CB A / P	CIRCUIT TYPE	CIRCUIT #
1	K	100 / 3	COOK COUNTER SUB-PANEL	5212	A	9617 BACK COUNTER SUB-PANEL	100 / 3	K	2
3	K		- X -	4875	B	8950 - X -		K	4
5	K		- X -	4844	C	11051 - X -		K	6
7		20 / 1	S		A	S	20 / 1		8
9		20 / 1	S		B	1200 ICE MAKER	20 / 2	K	10
11		20 / 1	S		C	1200 - X -		K	12
13		20 / 1	S		A	1000 WALK-IN FREEZER DOOR HTRS	20 / 1	K	14
15		20 / 1	S		B	S	20 / 1		16
17		20 / 1	S		C	S	20 / 1		18
19		20 / 1	S		A	1800 COFFEE BREWER	20 / 1	K	20
21	K	20 / 1	DRINK DISPENSER	360	B	960 FRYER CONTROL	20 / 1	K	22
23	K	20 / 1	ICE MACHINE SANITIZER	400	C	400 SALAD DISPLAY CASE	20 / 1	K	24
25	K	20 / 1	DRINK SYSTEM	400	A	1000 FRENCH FRY DISP, MILK REFR	20 / 1	K	26
27	K	30 / 2	ICE CREAM FREEZER	300	B	900 ROOF TOP RECEPTS	20 / 1	R	28
29	K		- X -	300	C	0			30
31	K	20 / 1	SHAKE BLENDER	1600	A	0			32
33	K	20 / 1	SHAKE BLENDER	1600	B	0			34
35	K	20 / 1	RE-THERMALIZER TIMER	200	C	0			36
37			0		A	0			38
39			0		B	0			40
41			0		C	0			42
			TOTALS (THIS PANEL):	A	B	C TOTAL DEMAND LOAD (KVA)*:		38	
			CONNECTED LOAD PER PHASE (VA):	20629	19145	18395 TOTAL DEMAND LOAD (A)*:		106	
			CONNECTED LOAD PER PHASE (A):	172	159	153 *NOTE INCLUDES SUB-FED LOADS (IF ANY)			

MAIN SWITCHBOARD NOTES

1. MAIN SWITCHBOARD MUST MEET ALL REQUIREMENTS OF THE UTILITY COMPANY, MANUFACTURER SHALL OBTAIN APPROVAL.
2. PROVIDE EQUIPMENT GROUND BUS WITH SEPERATE LUGS FOR EACH WIRE, ACCESSIBLE IN FRONT OF SWITCHBOARD.
3. SECURE SWITCHBOARD TO FLOOR WITH 4 1/2" ROUND PHILLIPS RED HEAD ANCHORS FOR EACH SWITCHBOARD SECTION AND ALSO SECURE EACH SECTION TO WALL.
4. PROVIDE ENGRAVED NAMEPLATES FOR IDENTIFICATION OF SWITCHES AND CIRCUIT BREAKERS ON DISTRIBUTION SECTION, TAPE OR MARKING PEN ARE NOT ACCEPTABLE.
5. PROVIDE PADLOCK DEVICE ON MAIN SWITCH AND ALL SWITCHBOARD AND CIRCUIT BREAKERS IN DISTRIBUTION SECTION.
6. PROVIDE INSULATED BUSHINGS ON ALL CONDUITS, METALIC OR PLASTIC, WITH #4 AWG WIRE AND LARGER ENTERING ALL SWITCHBOARD, PANEL, EQUIPMENT, OR DEVICE ENCLOSURES.
7. DESIGNER SHALL VERIFY AND CONFIRM MIN CIRCUIT AMPS AND MOCP FOR EACH SITE SPECIFIC REFRIGERATION UNIT, AND HAVC UNITS.

SHORT CIRCUIT NOTES

1. ALL CIRCUIT BREAKERS AND FUSES MUST HAVE INTERRUPTING RATINGS TO CONFORM TO N.E.C. ARTICLES: 110.9 110.10, 230.65, 240.60 (b) AND OTHER APPLICABLE PROVISIONS.
2. SHORT CIRCUIT AVAILABLE CAPACITY AT MAIN SWITCHBOARD SHALL BE CONFIRMED WITH UTILITY CO. AND SHALL BE A MIN OF 42,000 AMPS.
3. MAIN DISCONNECT SWITCHBOARD BREAKERS AND PANELBOARD BREAKER ENCLOSURES SHALL BE FIELD LABELED PER PROVISIONS OF NEC 110.22 TO INDICATE WHEN COMBINATION SERIES RATING ARE BEING USED. LABEL SHALL READ AS FOLLOWS: "CAUTION,SERIES RATED SYSTEM XX,000 AMP RATING (PER UTILITY) IDENTIFIED REPLACEMENT COMPONENT REQUIRED."
4. ALL SWITCHGEAR SHALL BE CERTIFIED BY THE MANUFACTURER TO BE COMPATIBLE WITH THE DRAWINGS AND SHALL SUBMIT SHOP DRAWINGS FOR APPROVAL WITH A COMPLETE SUBMITTAL.

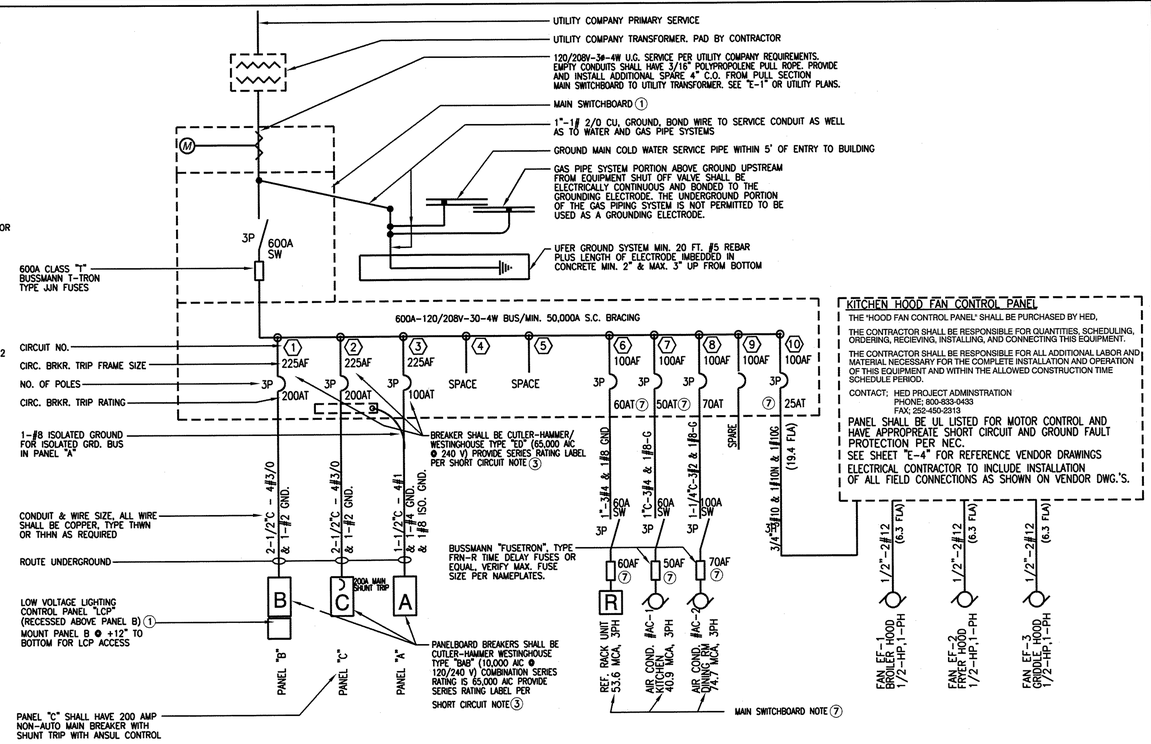

SINGLE LINE DIAGRAM — SCALE N.T.S. — 2

PANELBOARD NOTES

1. PROVIDE LOW VOLTAGE LIGHTING CONTROL PANEL IN ACCORDANCE WITH DETAILS SHOWN ON LIGHTING CONTROL DETAIL SHEET AND SPECIFICATIONS.
2. PROVIDE HANDLE "LOCK-ON" DEVICE ON CIRCUIT BREAKERS INDICATED
3. PROVIDE PADLOCK DEVICE ON CIRCUITS AS MARKED.
4. ALL CURCUIT BREAKERS IN PANELS SHALL HAVE MIN 10,000 A.I.C. R.M.S. SYMMETRICAL. COMPLY w/UTILITY COMPANY REQUIREMENTS.
5. ALL CURCUIT BREAKERS SHALL HAVE PERMANENT CIRCUIT NUMBER IDENTIFICATION.
6. IDENTIFICATION OF ALL CIRCUIT BREAKERS SHALL BE BY TYPEWRITTEN METHOD ONLY.
7. ALL PANELS SHALL BE CUTLER-HAMMER OR SQUARE D.
8. PROVIDE ENGRAVED BAKELITE NAMEPLATES ON OUTSIDE OF PANEL, MARKING PEN OR TAPE WILL NOT BE ACCEPTED.
9. ALL PANELS, TIME SWS AND RELAY ENCLOSURE SHALL HAVE FLUSH TYPE TRIM WITH DOOR, SPRAY PAINTED TO MATCH WALLS (UNLESS NOTED OTHERWISE).
10. PROVIDE ISOLATED GROUND BUS IN PANEL "A" IN ADDITION TO THE REGULAR EQUIPMENT GROUND BUS. INSTALL NO. 8 ISOLATED GROUND WIRE FROM ISOLATED GROUND BUS IN PANEL "A" TO GROUND BUS IN MAIN SWITCBOARD. ISOLATED GROUND BUS IN PANEL"A" SHALL BE USED ONLY FOR ISOLATED GROUNDED CIRCUITS.
11. NOT USED.
12. PANEL "C" SHALL HAVE 225 AMP, 3 POLE NON-AUTO MAIN CIRCUIT BREAKER WITH SHUNT TRIP CONTROL BY ANSUL MICRO SWITCH ALARM.
13. ROOF DRAIN CIRCUIT (A-9) SHALL HAVE CLASS B TYPE GFIC BREAKER. VERIFY SITE WHERE APPLICATION IS REQUIRED.
14. PROVIDE GFCI CIRCUIT BREAKER FOR A-33, A-35.

MAIN SWITCHBOARD LOAD SUMMARY

LOAD	DEMAND KVA
PANEL "A"	31.5 KVA
PANEL "B"	47.2 KVA
PANEL "C"	38.1 KVA
REFRIG PANEL	17.0 KVA
AIR COND. #1	15.0 KVA
AIR COND. #2	18.0 KVA
HOOD FANS & MUA-1	6.0 KVA
25% A.C.	5.0 KVA
TOTAL DEMAND LOAD =	177.8 KVA
	494.0 A
	(@ 120/208V)

NOTE: SEE MAIN SWITCHBOARD NOTES THIS SHEET.

NOTE: PROVIDE 3-600A BUSSMANN T-TRON TYPE JJN SPARE FUSES.

CUTLER-HAMMER MSBP SERIES CARL'S PROTO14 SWITCHBOARD CALL STEVE SCHINKO AT CUTLER HAMMER, 909-869-8250 FOR PRICE & ORDERING INFORMATION

SQUARE D FLOOR STANDING DISTRIBUTION SECTION SQUARE D TYPE SF346S-SA26PS-SABLL CALL SQUARE D, 562-699-7008 FOR PRICE & ORDERING INFORMATION

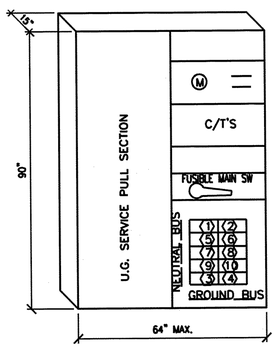

MAIN SWITCHBOARD — SCALE N.T.S. — 8

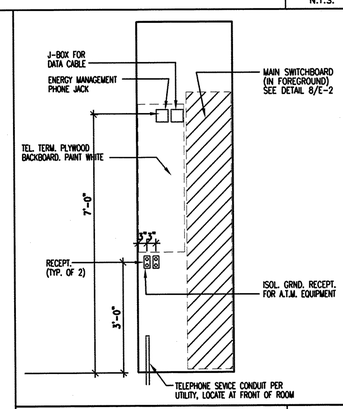

ELEV. ELECTRIC RM. LEFT — SCALE 1/2"=1'-0" — 3

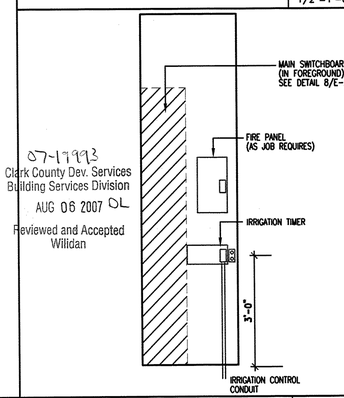

07-17993
Clark County Dev. Services
Building Services Division
AUG 06 2007 DL
Reviewed and Accepted
Willdan

ELEV. ELECTRIC RM. RIGHT — SCALE 1/2"=1'-0" — 4

THIS DRAWING IS AN INSTRUMENT OF SERVICE BETWEEN THE ARCHITECT AND HIS CLIENT, BUT REMAINS THE PROPERTY OF THE ARCHITECT.
© ALL RIGHTS RESERVED 2005

architecture/engineering/site planning/interior design
GARY GUY WILSON AIA STUDIOS... (702)876-0668
professional corp / certified n.c.a.r.b.
7625 South Industrial Road, Suite#100 Las Vegas, Nevada 89139
4175 South Riley Street Suite 200 Las Vegas, NV 89147 Tel: 702.873.0670 Fax: 702.873.1098 www.shinevada.com
MEP: SH NEVADA
CONSULTANTS:
CIVIL: CIVILWORK'S, INC.
STRUCTL: WRIGHT ENGINEERS

CARL'S JR RESTAURANT @ RUSSELL ROAD & EASTERN AVE.

McCARRAN MARKETPLACE
FOR: S.L. INVESTMENTS, MR. STEVE LARSON
CLARK COUNTY, NEVADA

MAIN SWITCHBOARD, PANEL SCHEDULES, & SINGLE LINE DIAGRAM

PROJ.NO.	13520701.00
PROJ.ARCH.	G.G.WILSON,AIA
PROJ.MGR.	MVM
JOB CAPT.	MVM
TECH'N	
ARCH.CHK.	GGW
PH-2/3	02FEB07
PH-4	30MAR07
PH-5	02MAY07

REVISIONS
1 ----------
2
3
4
5
6
7

PRINTS REQUIRE ARCHITECT'S SEAL & SIGN. FOR PROOF OF VALIDITY
PROFESSIONAL ENGINEER DAVID S. GRANTLEY EXPIRES 12/31/08 ELECTRICAL No.7581 STATE OF NEVADA

LV070018

SHT.NO. E-2

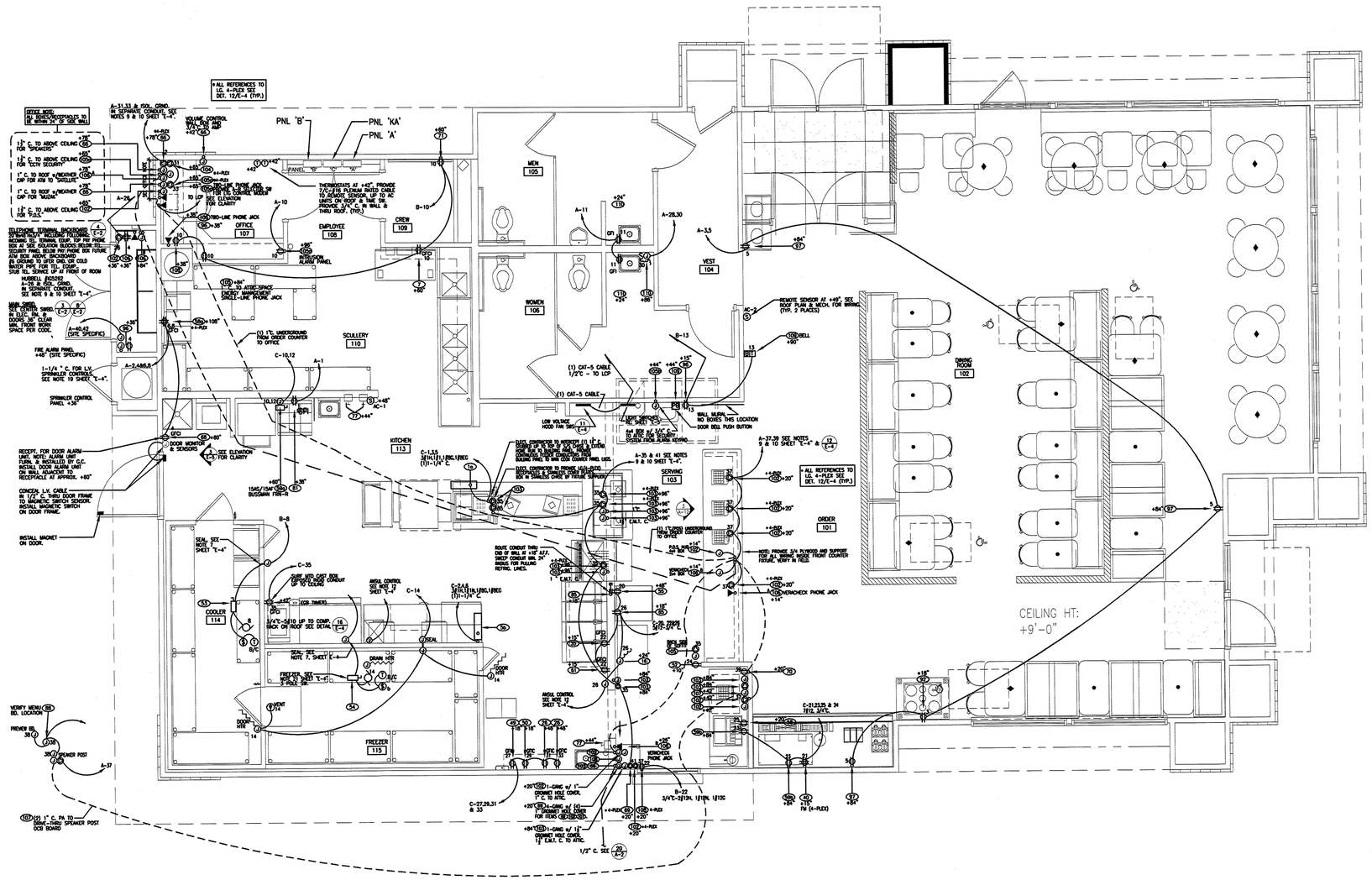

07-19993
Clark County Dev. Services
Building Services Division
AUG 06 2007 DL
Reviewed and Accepted
Willdan

ELECTRICAL POWER AND AUXILIARY PLAN | SC: 1/4"=1'-0" | 1

THIS DRAWING IS AN INSTRUMENT OF SERVICE BETWEEN THE ARCHITECT AND HIS CLIENT, BUT REMAINS THE PROPERTY OF THE ARCHITECT.
© ALL RIGHTS RESERVED 2005

planning/interior design
AIA STUDIOS...
(702)876-0568
professional corp / certified n.c.a.r.b.
architecture/engineering/site
GARY GUY WILSON
7625 South Industrial Road, Suite#100
Las Vegas, Nevada 89139
MEP: SHI NEVADA
4175 South Riley Street
Suite 200
Las Vegas, NV 89147
Tel: 702.873.0670
Fax: 702.873.1098
www.shinevada.com
CONSULTANTS:
CIVIL: CIVILWORKS, INC.
STRUCTL: WRIGHT ENGINEERS

CARL'S JR RESTAURANT
@ RUSSELL ROAD & EASTERN AVE.
McCARRAN MARKETPLACE
FOR: S.L. INVESTMENTS, MR. STEVE LARSON
CLARK COUNTY, NEVADA

PROJ.NO.	13520701.00
PROJ.ARCH.	G.G.WILSON,AIA
PROJ.MGR.	MVM
JOB CAPT.	MVM
TECH'N	.
ARCH.CHK.	GGW
PH-2/3	02FEB07
PH-4	30MAR07
PH-5	02MAY07

REVISIONS
..

PRINTS REQUIRE ARCHITECT'S SEAL & SIGN. FOR PROOF OF VALIDITY.
DAVID O. BRANTLEY
EXPIRES 12/31/08
ELECTRICAL
No.7581
STATE OF NEVADA
PROFESSIONAL ENGINEER

LV070018

ELECTRICAL POWER AND AUXILIARY PLAN

SHT.NO. E-3

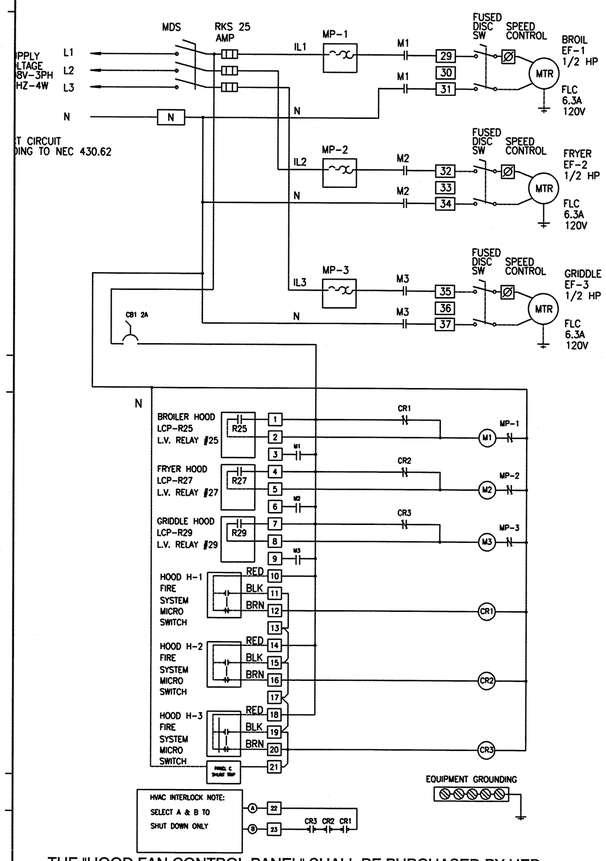

THE "HOOD FAN CONTROL PANEL" SHALL BE PURCHASED BY HED,

THE CONTRACTOR SHALL BE RESPONSIBLE FOR QUANTITIES, SCHEDULING, ORDERING, RECIEVING, INSTALLING, AND CONNECTING THIS EQUIPMENT.

THE CONTRACTOR SHALL BE RESPONSIBLE FOR ALL ADDITIONAL LABOR AND MATERIAL NECESSARY FOR THE COMPLETE INSTALLATION AND OPERATION OF THIS EQUIPMENT AND WITHIN THE ALLOWED CONSTRUCTION TIME SCHEDULE PERIOD.

CONTACT; HED PROJECT ADMINSTRATION
PHONE; 800-833-0433
FAX; 252-450-2313

DENOTES TERMINAL BLOCK CONNECTION

FIELD / CLIENT INSTALLATION

EN HOOD FAN CONTROL PANEL — SCALE: N.T.S. — 20

ICE PLATES SHALL BE SATIN STAINLESS
EL, DECORA TYPE

UNTING HEIGHT SHALL BE +42".

SHEET E-9, LCP DETAILS.

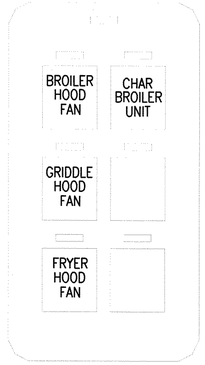

BROILER UNIT / HOOD FANS SWITCH DETAIL — SCALE: N.T.S. — 11

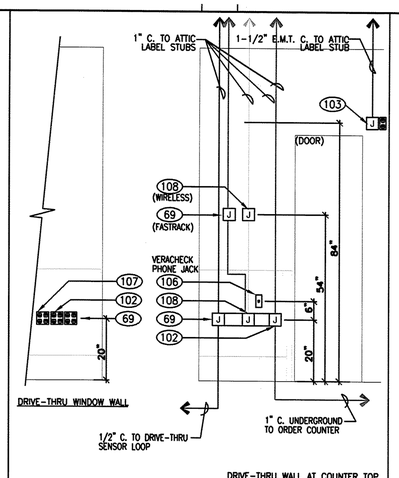

DRIVE-THRU WALL AT COUNTER TOP

ELEVATION AT DRIVE-THRU WALL — SCALE: N.T.S. — 13

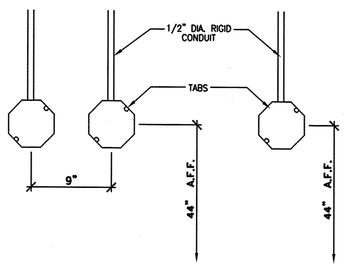

ELECTRICIAN TO INSTALL 1/2" DIA. CONDUIT TERMINATE IN ATTIC (FIRE PROTECTION COMPANY TO COMPLETE TO EXHAUST HOOD) ALSO TO PROVIDE & INSTALL 4" BOX W/SCREW TABS @ CORNERS AS SHOWN- SEE FIRE PROTECTION SPECS.- (3) REQUIRED SEE PLAN FOR LOCATION.

ANSUL PULL DETAIL ITEM #77 — SCALE: N.T.S. — 14

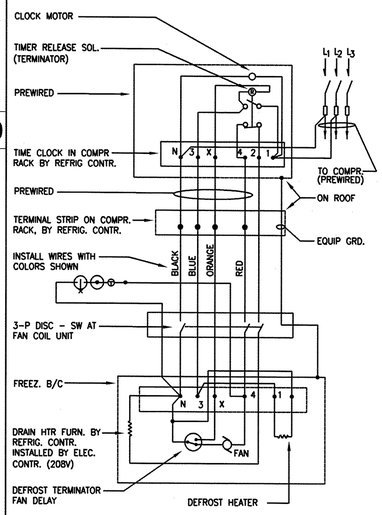

WALK-IN FREEZER DEFROST CONTROL DIAGRAM ALL CONDUIT & WIRING BY ELEC. CONTR. UNLESS SPECIFICALLY NOTED OTHERWISE. REFER TO REFRIGERATION COMPANY WIRING DIAGRAMS

WALK-IN DIAGRAM — SCALE: N.T.S. — 16

ELECTRICAL EQUIPMENT SCHEDULE

No.	REMARKS	CONNECTION TYPE	LOAD WATT/AMP	PHASE	H.P.	VOLTS	DESCRIPTION	No.
XX	PROVIDE CAST METAL SURFACE BOX, RIGID CONDUIT FEEDER	DCO-GFIC-20A-120V	300W	1		120	GB TIMER	XX
1a	DIRECT CONNECT SUB-PANEL TO MAIN PANEL - SEE SHEET "K-4". DIRECT CONNECT IG RECEPTACLE TO IG PANEL. SEE ITEM #103.	DIRECT	35.6A	3		208/120	MAIN COOK COUNTER - INC. PAPER BINS, FRY DUMP, REFRIG., BASE, STEAMERS, & COLD TOP	1a
5b	DIRECT CONNECT SUB-PANEL TO MAIN PANEL - SEE SHEET "K-5". DIRECT CONNECT IG RECEPTACLE TO IG PANEL. SEE ITEM #103.	DIRECT	57.2A	3		208/120	BACK COOK COUNTER - INC. SALAD, WARMERS, MICROS TOASTER, ETC.	5b
7	GFI RECEPTACLE.	DCO-GFIC-20A-120V	900W	1		120	WORK TABLE	7
16		DIRECT	600W	1		120	DRIVE ORDER TABLE BAG WARMER	16
26		DCO-GFIC-20A-120V	1600W	1		120	SHAKE BLENDER (HAMILTON)	26
35		4-PLEX-GFIC-20A-120V	960W	1		120	4-BAY FRYER UNIT w/FILTER UNIT	35
36								36
40	PROVIDE 4-PLEX RECEPTACLE IN DRINK CABINET - ITEM #12.	4-PLEX-20A-120V	2.5A	1		120	SELF-SERVE DRINK DISPENSER UNITS (2)	40
49		DCO-GFIC-20A-120V	300W	1		120	ICE CREAM FREEZER (EXCELLENCE)	49
50		DCO-GFIC-20A-120V	300W	1		120	ICE CREAM STAGING FREEZER (SILVER KING)	50
52	INSTALL RECEPT. ON END OF SUPPORT WALL OF ORDER COUNTER.	DCO-20A-120V		1	1/3	120	DISPLAY CASE	52
53	*ELEC. CONN. FOR BLOWER COIL, T-STAT, & SOLENOID (800W) DOOR DEFROST (500W) & LIGHTS (200W)	*J-BOX'S	1500W	1		120	WALK IN COOLER UNIT	53
54	*ELEC. CONN. FOR BLOW. COIL, T-STAT, SOLENOID & DEFROST CIRC, (3900W) DRAIN LINE HTR. (1000W) DR. HTRS. (500W) & LIGHTS (200W)	*J-BOX'S	5600W	1		208 & 120	WALK IN FREEZER UNIT	54
55		DCO-20A-120V	20A/1800W	1		120	(1) COFFEE BREWER UNIT, AIRPOTS, & RACK	55
57								57
58		DCO-20A-120V	4.4A	1		120	DRINK SYSTEM: DROP-IN DISP.; 2 HEAD DISP. @ DRIVE THRU	58
58b	TWO CIRCUITS FOR TWO SEPARATE SYSTEMS	4-PLEX-GFIC-20A-120V	(2) @ 6.3A EA	1	(2) 1/3	120	CARBONATOR PANEL	58b
59	PROVIDE 15A SWITCH W/15A TYPE FRN-R FUSES.	DIRECT	10A	1(3) W		208	ICE MACHINE & BIN	59
60	PROVIDE 30A - 250V, 2 POLE 3 WIRE TWISTLOCK. (HUBBELL IG2620A)	TWIST-IG-30A-120/208V	20.7A	1(3) W		208	SHAKE MACHINE (SELF CONTAINED)	60
60b	PROVIDE SURFACE CAST BOX AND RIGID STEEL CONDUIT TO CLG	DCO-GFIC-20A-120V	.7A	1		120	RETHERMALIZER TIMER	60b
61		DCO-GFIC-20A-120V	.7A	1		120	SCHWAN FRENCH FRY DISPENSOR	61
65		DCO-20A-120V	4.6A	1	1/5	120	HALF SIZE REFR. BASE w/S.S. TOP & CASTERS	65
66	PROVIDE (2) 1" CONDUIT TO ROOF WITH WEATHER CAP FOR SEPARATE SATELLITE CABLES. PROVIDE (1)1-1/2" AT OFFICE TO CLG SPACE FOR SPEAKER CABLES PROVIDE REC INSIDE CABINET SEE DETAIL 12 THIS SHEET & 17/E-7.	IG 4-PLEX	1A	1		120	MUSIC SYSTEM - "MUZAK"	66
68	ELECT CONTRACTOR TO INSTALL UNIT, SENSORS, AND LV WIRING CONCEALED	DCO-GFIC-20A-120V	15A	1		120	DELIVERY DOOR MONITOR ALARM	68
69	1/2" CONDUIT FROM DRIVE WAY LOOP TO DRIVE THRU COUNTER & 1" C. UP TO ATTIC SPACE.	4-PLEX-IG-15A-120V	0.5A	1		120	SPEED OF SERVICE LOOP SYSTEM	69
70		DCO-20A-120V	1A	1		120	UNDER COUNTER SAFE	70
71		DCO	200W	1		120	VIDEO MONITOR & THEFT BRACKET	71
72								72
74								74
77	G.C. TO PROVIDE 4/0 J-BOX & 1/2" E.M.T. CONDUIT FOR REMOTE MANUAL PULL FOR EACH HOOD; TERMINATE CONDUIT IN ATTIC. SEE DETAIL 14 THIS SHEET.						ANSUL FIRE PROTECTION SYSTEM, FIRE AXES, EXTINGUISHERS, LABELS	77
80	STUB UP FLUSH WITH FLOOR AND EXTEND USEING SEALTITE FOR FINAL CONNECTION.	DIRECT		1	1/3	120	SALAD BAR (SELF CONTAINED)	80
81		DCO-GFIC-20A-120V	20A	1		120	TRASH COMPACTOR	81
85	2" C. - PVC FROM ITEM #1 AT WALL TO ABOVE CEILING (SEE ITEM #1).	MSB #6					REFRIGERATION SYSTEM	85
88		DIRECT	800W	1		120	DRIVE THRU PREVIEW, MENU, & SPEAKER	88
92	INSTALL DEVICE AND STAINLESS COVER PLATE	DCO-20A-120V	1600W	1		120	SALSA BAR	92
96		DCO-20A-120V	500W	1		120	CONVENIENCE RECEPTACLE	96
97	WHITE COVER PLATE & DEVICE / FLUSH CLOCK TYPE RECEPTACLE	SINGLE-15A-120V	200W	1		120	FLY LIGHT RECEPTACLE	97
102	PROVIDE ORANGE STRAIGHT BLADE RECEPTACLE AT DRIVE THRU, BACK UP, & ORDER COUNTER. 1" C. FROM ORDER COUNTER TO RECALL REG. & DRIVE THRU REGISTER & TO ATTIC. 1" C. UNDERGROUND FROM ORDER COUNTER TO OFFICE; 1½" C. TO ABOVE CEILING IN OFFICE.	4-PLEX-IG-15A-120V	400W(EA)	1		120	COMPUTER CASH REGISTERS - "P.O.S." SYSTEM	102
103	PROVIDE ORANGE STRAIGHT BLADE RECEPTACLE AT COOKLINE & BACK OF MENU BOARD WALL. 1" C. FROM DRIVE THRU UP WALL TO ATTIC & 1½" E.M.T. C. DOWN WALL FOR C.R.T. SEE DETAIL 13/-	4-PLEX-IG-15A-120V	500W	1		120	SPEED OF SERVICE ORDER SYSTEM	103
104	PROVIDE STRAIGHT BLADE IG RECEPTACLE AT OFFICE. INSTALL CONDUIT FOR COMPUTER CABLES AS SHOWN ON SHEET "E-3" & DETAIL 13/E-4.	4-PLEX-IG-15A-120V	1000W	1		120	BACK OFFICE COMPUTER, PRINTER	104
105a	PROVIDE IG RECEPTACLE AT OFFICE (VCR) & ORDER COUNTER SOFFIT(MONITOR). J-BOX AT SHAKE MACH SOFFIT (MONITOR VIDEO);1-1/2"C TO OFFICE CLG SPACE FOR VIDEO CABLES.	DCO-IG-15A-120V	500W	1		120	CCTV SECURITY SYSTEM	105a
105b	3/4" C. AT ALARM KEYPAD TO ATTIC SPACE. PROVIDE REC AT SEC PANEL IN OFFICE	DCO-IG-15A-120V	200W	1		120	INTRUSION SECURITY SYSTEM	105b
106	1" C. FROM ORDER COUNTER, DRIVE THRU, AND OFFICE TO TEL. TERM. BOARD.						A) ATM; B) VERA CHECK	106
107	1" C. FROM DRIVE THRU WINDOW TO SPEAKER POST.						DRIVE THRU SYSTEM	107
108	PROVIDE RECEPTACLE AT DRIVE WINDOW FOR CHARGER. 1" C. TO ATTIC @ D.T..	4-PLEX-20A-120V	15A	1		120	DRIVE THRU WIRELESS RADIO SYSTEM	108
109	EDWARDS #598 W/#5933 MOUNT. PL; INSTALL ABOVE CEILING. NUTONE SURFACE MTD. CHIME; CONNECT TO SOUND (2) NOTES/EDWARDS #692-W W/SNAP FIT WHITE PUSH BUTTON W/#147-1.	DCO-15A-120V	0.5A	1		120	CALL BELL & PUSH BUTTON	109
110	PROVIDE INSTALLATION OF AUTOMATIC LAVATORY FAUCETS PER MFGR'S INSTRUCTIONS INCLUDING CONDUIT, BOXES, WIRING, TRANSFORMERS ETC.	DCO-GFIC-20A-120V	500W	1		120	AUTO LAV FAUCET	110

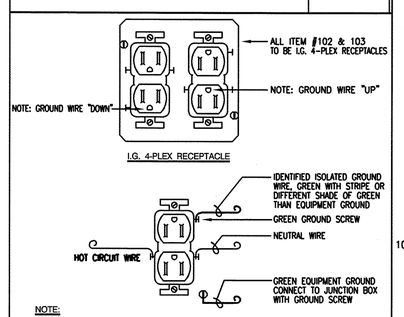

NOTE:
IDENTIFY THE FIRST JUNCTION BOX (OR RECEPTACLE BOX IF STUBBED AT RECEPTACLE) WHERE THE ISOLATED GROUND CIRCUIT IS FIRST STUBBED UP AT THE ORDER COUNTER, PICK-UP WINDOW AND CASH WINDOW. IF STUBBED UP AT A RECEPTACLE, INSTALL AN ORANGE DEVICE PLATE P/S#6P-8-IG, OR EQUAL. IF AT A JUNCTION BOX PROVIDE AN ORANGE BLANK PLATE. PLATES MAY BE SPRAY PAINTED ORANGE.

I.G. RECEPTACLES — SCALE: N.T.S. — 12

1. ITEM NUMBERS (#) ON PLAN CORRESPOND TO NUMBERS IN "ELECTRICAL SCHEDULE" ABOVE & "EQUIPMENT SCHEDULE" ON SHEET "K-1".
2. SEE SHEET "E-3" FOR EXACT LOCATIONS AND MOUNTING HEIGHTS OF OUTLETS.
3. ALL RECEPTACLES SHALL BE INSTALLED +18" FROM FLOOR TO CENTER OF J-BOX UNLESS NOTED OTHERWISE ON SHEET "E-3".
4. ELECTRICAL CONTRACTOR TO COORDINATE WITH PLUMBING CONTRACTOR FOR THE EXACT PLACEMENT OF ELECTRIC CONDUIT AND PANELS, WITH RELATION TO PLUMBING LINES, PAY PARTICULAR ATTENTION TO SYRUP LINES.
5. ALL EMPTY CONDUITS SHALL HAVE POLY-PROPOLENE PULL LINES INSTALLED FOR USE BY OTHERS.
6. ALL EQUIPMENT LIGHT FIXTURES AND SIGNS FURNISHED BY OTHERS SHALL BE CONNECTED BY ELECTRICAL CONTRACTOR.
7. SEAL OPENING AROUND CONDUIT TO BLOWERS AND LIGHTS WHERE IT ENTERS WALL OR CEILING OF COOLERS AND FREEZER, ALSO SEAL INSIDE CONDUIT AT J-BOX, CONNECT STAT. TO CONTROL SOLENOID VALVE ONLY, USE SEALTITE FLEX OR EMT IN UNDER COUNTER COOLERS AND FREEZERS AND IN WALK-IN COOLER AND FREEZER.
8. ALL CONDUIT CONNECTIONS TO KITCHEN EQUIPMENT AND APPLIANCES SHALL BE MADE WITH METALLIC SEALTITE CONDUIT WITH EQUIPMENT GROUND WIRE. ALSO ALL CONNECTIONS WHICH HAS ANY POSSIBILITY OF CONTACT WITH FOOD, GREASE, OIL, DRINK, WASTE AND ETC, INCLUDING BUT NOT LIMITED TO FOOD PREP UNIT, GRIDDLE, FRYER, BEV UNITS, & SALAD BAR.
9. INSTALL COMPUTER PRINTER AND CASH REGISTER CIRCUIT IN SEPARATE CONDUIT WITH ISOLATED EQUIPMENT GROUND WIRE. INSTALL A SECOND EQUIPMENT GROUND WIRE WHETHER STEEL OR PVC IS USED. NO OTHER CIRCUITS IN THIS CONDUIT OR J-BOX EXCEPT FOR COMPUTERIZED EQUIPMENT AND ASSOCIATED TELEPHONE EQUIPMENT CIRCUITS. RECEPTACLES SHALL BE TWISTLOCK HUBBELL AND IG-4700 DUPLEX OR EQUAL FOR ITEM (103) AND DUPLEX STRAIGHT BLADE HUBBELL #IG-5262 OR EQUAL FOR ITEM (102).
10. THE CONDUIT SYSTEM EQUIPMENT GROUND WIRE SHALL BE GREEN. THE ISOLATED GROUND WIRE MUST BE GREEN BUT OF A DISTINCTLY DIFFERENT SHADE FROM THE EQUIPMENT GROUND WIRE. OR GREEN WITH A STRIPE. COLOR CODE SHALL BE CONSISTENT FROM PANEL TO ALL RECEPTACLES. AT TIME OF INSPECTION BY CKE ELECT. INSPECTOR, CONTRACTOR SHALL REMOVE RECEPTACLES FROM BOXES TO VERIFY COLOR CODE AND CONNECTION OF GROUND WIRES.
11. ALL FLEXIBLE METAL CONDUIT NOT CONCEALED IN WALLS OR ABOVE CEILING SHALL BE LIQUID TIGHT AND INSTALLED PER N.E.C., ARTICLE 350. ALL CONDUITS INSTALLED ABOVE THE CEILING, IN THE T-BAR CEILING AREAS SHALL BE INSTALLED ABOVE THE BOTTOM CORD OF THE TRUSSES. DROPS TO LIGHT FIXTURES SHALL BE DIRECTLY ABOVE THE FIXTURE.
12. ELECTRICAL CONTRACTOR SHALL INSTALL OWNER FURNISHED KITCHEN HOOD FAN CONTROL PANEL AND INSTALL ALL FIELD CONNECTIONS AS SHOWN ON VENDOR DRAWINGS, FIELD CONNECTIONS INCLUDED BUT ARE NOT LIMITED TO HOOD FAN SWITCHES, ANSUL MICRO SWITCHES, SMOKE DETECTORS, ETC. MAKE-UP FAN SHALL SHUT DOWN AND EXHAUST FANS SHALL RUN UPON ANSUL ALARM PER NFPA 96, SEE VENDOR WIRING DIAGRAM, "M" DWG.'S, & SHEET "K-3".
13. PROVIDE STAINLESS STEEL DEVICE AND SWITCH PLATES IN ALL AREAS. UNLESS NOTES OTHERWISE.
14. ELECTRICAL CONTRACTOR SHALL ASSIST IN INSTALLING AUTOMOBILE DETECTOR SYSTEM AND SENSOR CABLE FROM DRIVE THROUGH WINDOW TO DRIVE THROUGH MENU BOARD WITH 10FT OF EXCESS CABLE AT BOTH ENDS. FINAL CONNECTIONS BY OTHERS.
15. ELECTRICAL CONTRACTOR SHALL ASSIST IN INSTALLING SPEAKER AND COMPUTER CABLES FROM DRIVE THROUGH WINDOW AND ORDER COUNTER, TO COOK'S SPEAKER AND COMPUTER PRINTERS AT FOOD PREP. COUNTER. LEAVE 10 FT. OF EXCESS CABLE AT BOTH ENDS. FINAL CONNECTION BY OTHERS.
16. AT COMPLETION OF ALL ELECTRICAL WORK AND AFTER FULL POWER HAS BEEN ENERGIZED, A FINAL INSPECTION OF ELECTRICAL WORK WILL BE MADE TO SEE THAT ALL WORK COMPLIES WITH THESE PLANS AND SPECIFICATIONS.
17. PROVIDE STAINLESS STEEL COVER PLATES WITH 3/4" RUBBER OR PLASTIC GROMMET HOLES FOR ALL CONDUIT SYSTEMS INCLUDING POS, SPEED OF SERVICE, CAR LOOP, TIMER SYSTEM, ETC. PLATES SHALL BE INSTALLED BEFORE INSTALLATION OF CABLES.
18. 30"Wx48"Hx3/4" PLYWOOD TELEPHONE TERMINAL BOARD (TYPE "AD" WITH "A" SIDE EXPOSED) 36" FROM FLOOR TO BOTTOM OF TERMINAL BOARD.
19. CONNECT SPRINKLER CONTROLLER THROUGH DISCONNECT SWITCH IF DIRECT CONNECTED. INSTALL RECEPTACLE IF FURNISHED WITH CORD AND PLUG INSTALL 1½" C. FOR LOW VOLTAGE SPRINKLER CONTROLS AND STUB INTO PLANTER AS SHOWN ON LANDSCAPE SHEET "L-3".
20. ELECTRICAL CONTRACTOR SHALL ARRANGE WITH THE RESTAURANT MANAGEMENT TO MEET WITH THE VENDOR OF THE SYSTEMS MENTIONED IN NOTES 14 AND 15 AND ASSIST IN PULLING IN THE CABLES. CABLES WILL BE FURNISHED BY OTHERS.
21. INSTALL CONDUITS IN WALK-IN COOLER AND FREEZER 1/2" AWAY FROM WALLS. VERIFY LOCATION w/SHELVING LAYOUT; REFER TO "K-1" & "K-2".
22. FLEXIBLE METAL CONDUIT SHALL BE INSTALLED IN ESSENTIALLY STRAIGHT LINES WITHOUT ANY LOOPS. PROVIDE ADDITIONAL SUPPORTS IF NECESSARY TO ELIMINATE SAGGING.

NOTES — SCALE: N.T.S. — 4

THIS DRAWING IS AN INSTRUMENT OF SERVICE BETWEEN THE ARCHITECT AND HIS CLIENT, BUT REMAINS THE PROPERTY OF THE ARCHITECT.
© ALL RIGHTS RESERVED 2005

architecture/engineering/site
GARY GUY WILSON
7625 South Industrial Road, Suite#100
Las Vegas, Nevada 89139
planning/interior design
AIA STUDIOS...
(702)876-0668
professional corp / certified n.c.a.b.

MEP:
SHE NEVADA
4175 South Riley Street
Suite 200
Las Vegas, NV 89147
Tel: 702.873.4700
Fax: 702.873.1098
www.shnevada.com

CONSULTANTS:
CIVIL: CIVILWORKS, INC.
STRUCTL: WRIGHT ENGINEERS

CARL'S JR RESTAURANT
@ RUSSELL ROAD & EASTERN AVE.
McCARRAN MARKETPLACE
FOR: S.L. INVESTMENTS, MR. STEVE LARSON
CLARK COUNTY, NEVADA

ELECTRICAL EQUIPMENT SCHEDULE, NOTES AND DETAILS

PROJ.NO.	13520701.00
PROJ.ARCH.	G.G.WILSON,AIA
PROJ.MGR.	MVM
JOB CAPT.	MVM
TECH'N	
ARCH.CHK.	GGW
PH-2/3	02FEB07
PH-4	30MAR07
PH-5	02MAY07

REVISIONS
07-19993
Clark County Dev. Services
Building Services Division
AUG 06 2007
Reviewed and Accepted
Wilidan

PRINTS REQUIRE ARCHITECT'S SEAL & SIGN. FOR PROOF OF AUTHENTICITY.
DAVID O. BRANTLEY
EXPIRES 12/31/08
ELECTRICAL
No.7581
STATE OF NEVADA

LV070018

SHT.NO. E-4.0

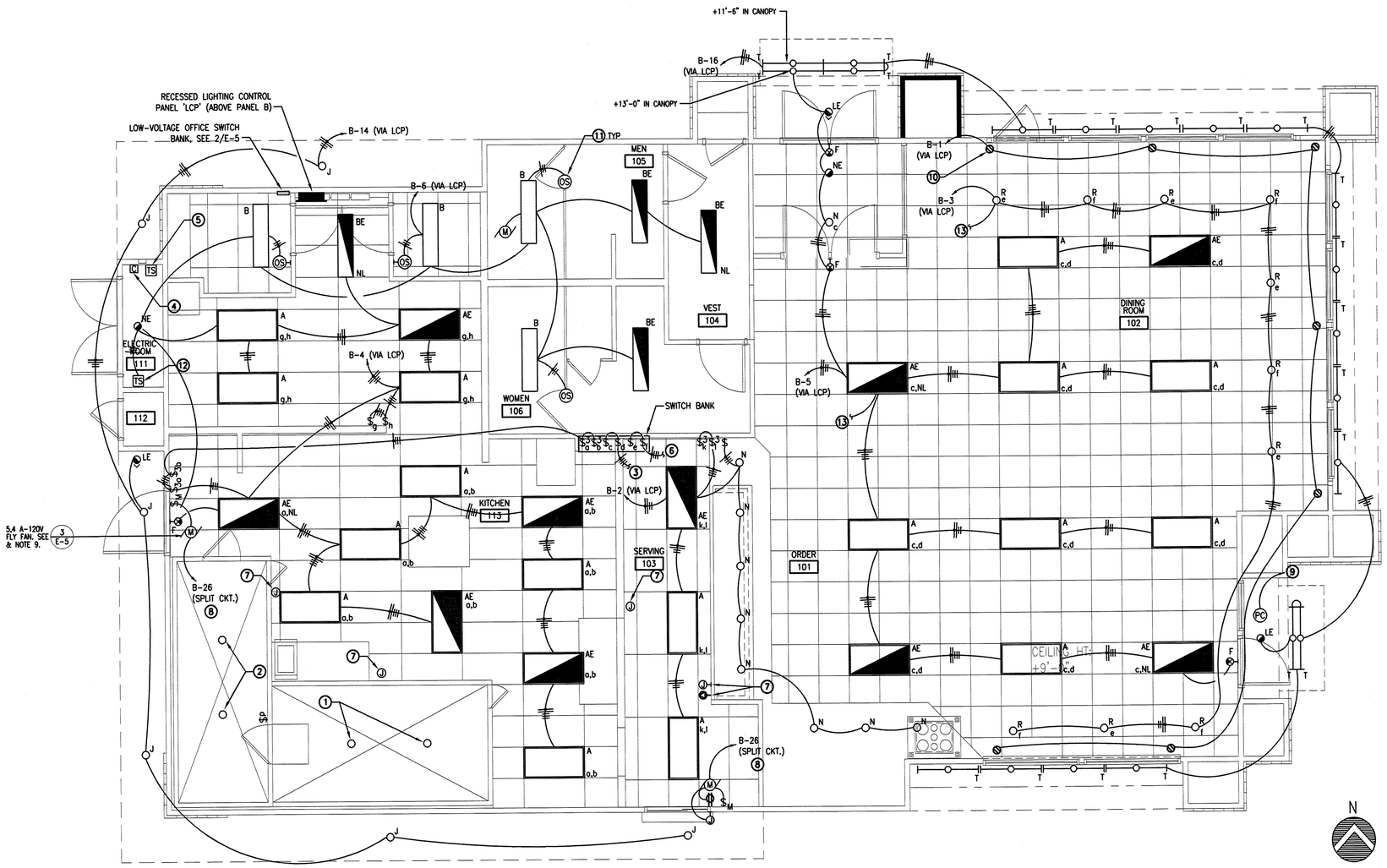

GENERAL NOTES

1. VERIFY EXACT LOCATIONS OF ALL LIGHT FIXTURES AND SIGNS FROM ARCHITECTURAL DRAWINGS, REFLECTED CEILING AND WITH C.K.E. VERIFY LOCATIONS OF SIGN CONNECTIONS WITH SIGN CONTRACTOR, SEE "K-1" FOR TABLE LAYOUT.
2. PROVIDE ADDITIONAL BLOCKING WHERE NECESSARY TO INSTALL ALL LIGHTING AND POWER OUTLETS IN EXACT LOCATIONS.
3. PROVIDE FIXTURE STUDS AND ADDITIONAL SUPPORT WHERE REQUIRED DUE TO THE WEIGHT OF THE FIXTURE.
4. NOT USED.
5. TYPE "A" LIGHT FIXTURES IN FOOD PREP AND SERVING SHALL HAVE INSIDE LAMPS ON FIRST SWITCH AND OUTSIDE LAMPS ON SECOND SWITCH.
6. INSTALL TWO #12 GAUGE SAFETY HANGAR WIRES ON ALL TYPE "A" & "B" AND ONE WIRE ON TYPES L & N FIXTURES PER UBC STD 47-1813.
7. NOT USED.
8. MICRO. SW. FURNISHED BY OTHERS, INSTALLED BY ELEC. CONTR. MOUNT ON DOOR HEAD, NOT ON SIDE. SEE DETAIL 3/E-5.
9. OUTLET BOXES SHALL NOT BE USED AS SOLE SUPPORT FOR CEILING FANS, EXCEPT LISTED FANS NOT EXCEEDING 35 LBS. IN WEIGHT CAN BE MOUNTED ON BOXES IDENTIFIED FOR SUCH USE.
10. LIGHT SWITCHES SHALL BE LOCATED BEHIND COUNTER ACCESSIBLE ONLY TO AUTHORIZED PERSONNEL IN ACCORDANCE WITH EFFICIENCY STANDARDS SEC 131(A0 EXCEPTION #2
11. NO ARMORED CABLE IS ALLOWED, INCLUDING LIGHT FIXTURE WHIPS.
12. ALL COVER PLATES SHALL BE STAINLESS STEEL IN ALL AREAS UNLESS OTHERWISE NOTED INCLUDING SWITCH, RECEPTACLE, BLANK AND POS GROMMETED HOLE PLATES.
13. ALL DINING ROOM CEILING RECEPTACLES SHALL BE WHITE DEVICES WITH WHITE COVER PLATES TO MATCH CEILING.
14. LIGHT FIXTURE TRIMS SHALL BE COMPLETELY FLUSH WITH CEILING AND CONCEAL ALL CUTS IN CEILING WITH NO LIGHT LEAKAGE AT TRIMS.
15. PROVIDE WALL MOUNTED MOTION SENSOR IN OFFICE AND CREW ROOMS. SENSOR SHALL BE WATT STOPPER #WI-300-W UNLESS NOTED OTHERWISE.
16. ALL LIGHT FIXTURES TRIMS SHALL SIT FLUSH WITH FINISH CEILING AND CHECKED FOR "LIGHT LEAKS". ALL LIGHT FIXTURE REFLECTORS SHALL BE CLEANED OF ALL DIRT.

KEY NOTES

1. LIGHTS AND SWITCHES FURNISHED WITH FREEZER. SEE KITCHEN EQUIPMENT SCHEDULE ITEM #54.
2. LIGHTS AND SWITCHES FURNISHED WITH COOLER. SEE KITCHEN EQUIPMENT SCHEDULE ITEM #53.
3. TO 'A' TYPE FIXTURES IN DINING AREA/TO LIGHT SWITCHES 'd' and 'e'.
4. 20A/5P LIGHTING CONTACTOR EQUAL TO CUTLER HAMMER #ECLO3B1A5A.
5. TIMESWITCH EQUAL TO TORK #72002L. COMPLIES WITH IECC 805.2.2.2.2.
6. TO 'R' TYPE FIXTURES IN DINING AREA/ TO LIGHT SWITCH 'f'.
7. SEE KITCHEN EQUIPMENT SCHEDULE FOR POWER CONNECTIONS.
8. FLY FAN.
9. PHOTOCELL, VERIFY WITH ARCHITECT/OWNER EXACT LOCATION AND ORIENTATION PRIOR TO ROUGH-IN.
10. WINDOW/CEILING RECEPTACLE.
11. PROVIDE CEILING MOUNTED OCCUPANCY SENSOR. INSTALL PER MANUFACTURERS INSTRUCTIONS AT TOILET PARTITIONS FOR MAX COVERAGE. WATT STOPPER OR EQUAL.
12. PROVIDE FLUSH MTD. SPRING WOUND TIMER WITH 0-2 HR. RANGE WITHOUT HOLD FEATURE TO CONTROL ELEC. RM. LIGHT, MARK TIME #90281.
13. ROUTE CONTROL SWITCH TO 'SWITCH BANK'.
14. NOT USED.

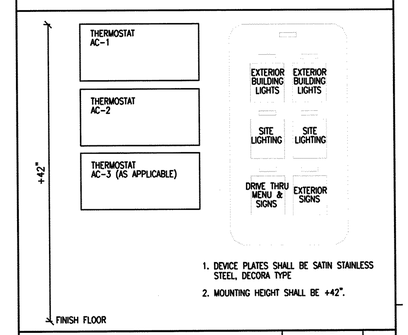

1. DEVICE PLATES SHALL BE SATIN STAINLESS STEEL, DECORA TYPE
2. MOUNTING HEIGHT SHALL BE +42".

OFFICE SWITCH — SCALE: N.T.S. — 2

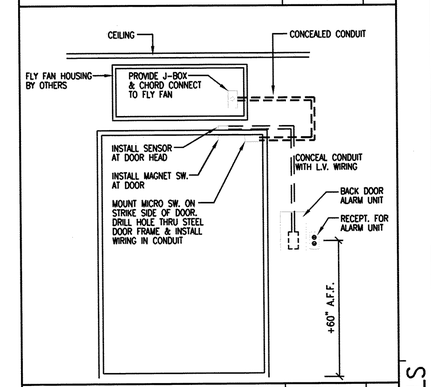

FLY FAN MOUNTING DETAIL — SCALE: N.T.S. — 3

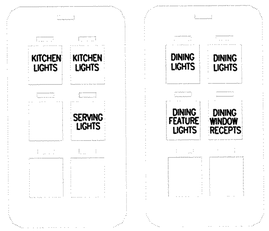

1. DEVICE PLATES SHALL BE SATIN STAINLESS STEEL, DECORA TYPE
2. MOUNTING HEIGHT SHALL BE +42".

LIGHT SWITCH DETAIL — SCALE: N.T.S. — 4

ELECTRICAL LIGHTING PLAN & DETAILS — SC: 1/4"=1'-0" — 1

THIS DRAWING IS AN INSTRUMENT OF SERVICE BETWEEN THE ARCHITECT AND HIS CLIENT, BUT REMAINS THE PROPERTY OF THE ARCHITECT.
© ALL RIGHTS RESERVED 2005

architecture/engineering/site
GARY GUY WILSON
7625 South Industrial Road, Suite#100
Las Vegas, Nevada 89139
AIA
planning/interior design
STUDIOS...
(702)876-0668
professional corp / certified n.c.a.r.b.
4175 South Riley Street
Suite 200
Las Vegas, NV 89147
Tel: 702.873.0670
Fax: 702.873.1098
www.shinevada.com
MEP: SHI NEVADA
CONSULTANTS:
CIVIL: CIVILWORKS, INC.
STRUCTL: WRIGHT ENGINEERS

CARL'S JR RESTAURANT
@ RUSSELL ROAD & EASTERN AVE.
McCARRAN MARKETPLACE
FOR: S.L. INVESTMENTS, MR. STEVE LARSON
CLARK COUNTY, NEVADA

PROJ.NO.	13520701.00
PROJ.ARCH.	G.G.WILSON,AIA
PROJ.MGR.	MVM
JOB CAPT.	MVM
TECH'N	.
ARCH.CHK.	GGW
PH-2/3	02FEB07
PH-4	30MAR07
PH-5	02MAY07

REVISIONS
07-19993
Clark County Dev. Services
Building Services Division
AUG 08 2007
Reviewed and Accepted
Wilidan

PRINTS REQUIRE ARCHITECT'S SEAL & SIGN. FOR PROOF OF VALIDITY

DAVID O. GRANTLEY
EXPIRES 12/31/08
ELECTRICAL
No. 7581
STATE OF NEVADA
PROFESSIONAL ENGINEER

LV070018

ELECTRICAL LIGHTING PLAN & DETAILS

SHT.NO. E-5

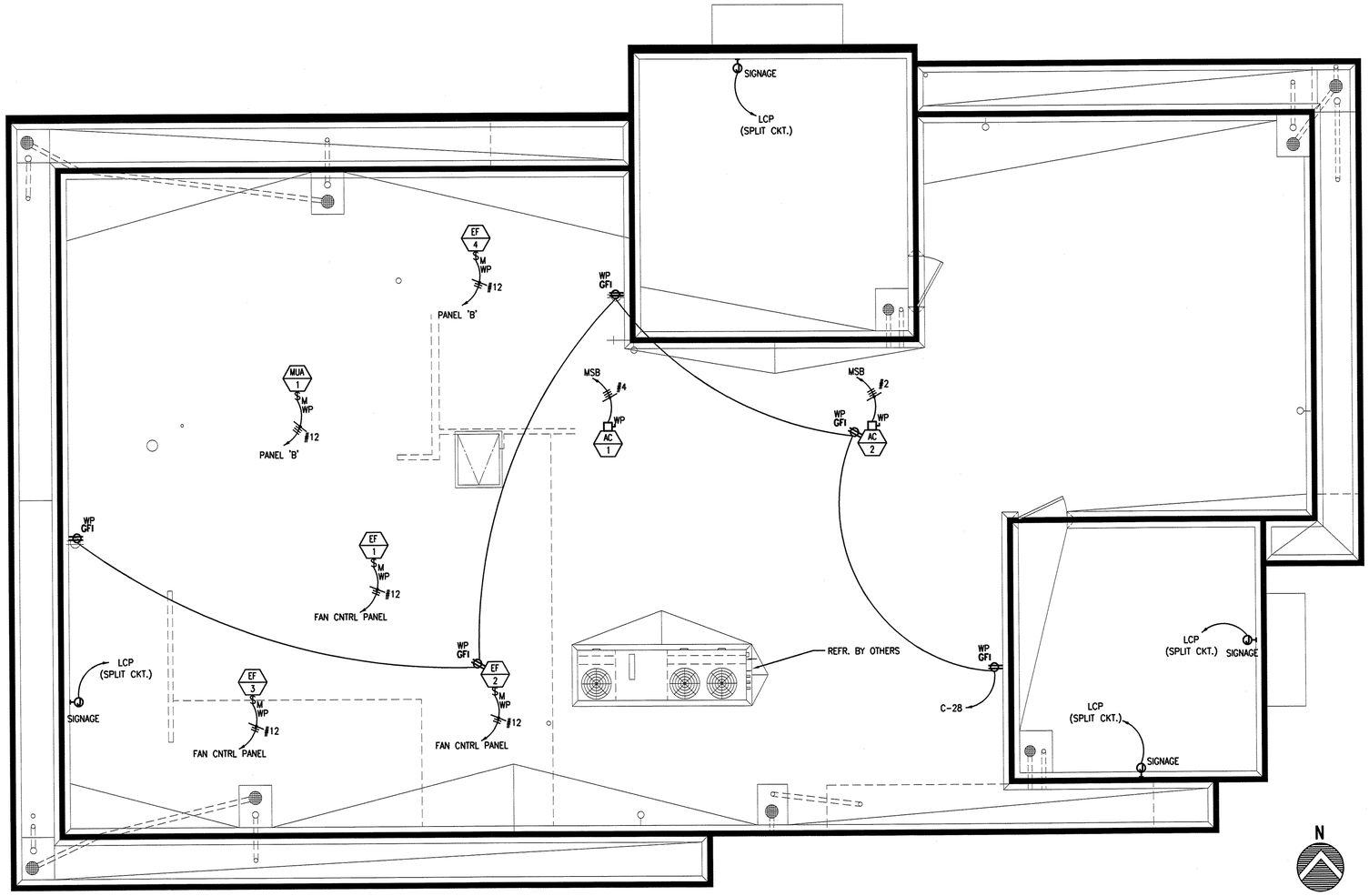

ELECTRICAL ROOF PLAN | SCALE: 1/4"=1'-0" | 1

GENERAL NOTES:

1. ALL EQUIPMENT ON ROOF SHALL BE WEATHERPROOF.
2. ALL WIRING ROUTED ON ROOF SHALL HAVE TYPE THW INSULATION, EXCEPT AS NOTED OTHERWISE.
3. VERIFY EXACT LOCATION OF ALL EQUIPMENT & CONNECTION POINTS WITH AIR CONDITIONING & REFRIGERATION CONTRACTORS.
4. PROVIDE PERMANENT IDENTIFICATION, PAINT OR ENGRAVED NAMEPLATES, ON DISCONNECT SWITCHES & CONTROL EQUIPMENT, WHERE NOT OBVIOUS MARKING PEN OR TAPE ARE NOT ACCEPTABLE.
5. SEE MECHANICAL SHEET "M-2" FOR EXACT LOCATIONS OF MECHANICAL EQUIPMENT AND STUB-UP LOCATIONS.
6. SEE MECHANICAL SHEET "M-4" FOR AIR CONDITIONING CONTROL WIRING.
7. ALL CONNECTIONS TO AIR CONDITIONING EQUIPMENT SHALL BE MADE WITH METALIC SEALTITE FLEX.
8. ELECTRICAL CONTRACTOR SHALL INSTALL LOW VOLTAGE CONTROL WIRING FOR AIR CONDITIONING UNITS. AIR CONDITIONING CONTRACTOR SHALL MAKE FINAL CONNECTIONS AT T-STATS & AIR CONDITIONING UNITS, TYPICAL.
9. ALL LOW VOLTAGE WIRING SHALL BE COLOR CODED AS DIRECTED BY AIR CONDITIONING CONTRACTOR.
10. ALL CONDUITS PROJECTING THROUGH ROOF MUST HAVE G.I. ROOF JACKS INSTALLED BEFORE ANY ROOFING IS INSTALLED. ROOFER SHALL ROOF IN JACKS. APPLYING JACKS AFTER ROOFING HAS BEEN COMPLETED IS NOT PERMITTED
11. ELECTRICAL CONTRACTOR SHALL INSTALL & SEAL COUNTER FLASHING ON ALL CONDUITS.
12. ALL CONDUITS TO EQUIPMENT ON ROOF SHALL BE ROUTED IN SPACE ABOVE CEILING & STUBBED UP AS NEAR AS POSSIBLE TO POINT OF CONNECTION. DO NOT ROUTE CONDUITS ON ROOF EXCEPT AS REQUIRED FROM STUB UP LOCATION. ALSO VERIFY EXACT CONNECTION POINT IN UNITS WITH AIR CONDITIONING CONTRACTOR. CONNECTION POINT MAY NOT BE AT POINT OF ENTRY TO EQUIPMENT.
13. DISCONNECT SWITCH IS PROVIDED WITH A/C UNIT. ELECTRICAL CONTRACTOR TO PROVIDE FINAL CONNECTION.

NOTES | SCALE: N.T.S. | 3

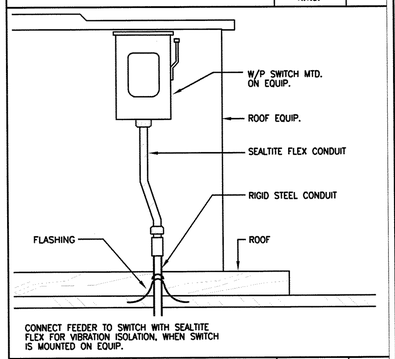

SWITCH MOUNTING DETAIL | SCALE: N.T.S. | 2

07 1993
Clark County Dev. Services
Building Services Division
AUG 06 2007 RL
Reviewed and Accepted
Wilidan

THIS DRAWING IS AN INSTRUMENT OF SERVICE BETWEEN THE ARCHITECT AND HIS CLIENT, BUT REMAINS THE PROPERTY OF THE ARCHITECT.
© ALL RIGHTS RESERVED 2005

architecture/engineering/site
GARY GUY WILSON AIA
7625 South Industrial Road, Suite#100
Las Vegas, Nevada 89139
(702)876-0668
professional corp / certified n.c.a.r.b.
planning/interior design
STUDIOS...
4175 South Riley Street
Suite 200
Las Vegas, NV 89147
Tel: 702.873.0670
Fax: 702.873.1088
www.shnevada.com
MEP: SH NEVADA
CONSULTANTS:
CIVIL: CIVILWORKS, INC.
STRUCTL: WRIGHT ENGINEERS

CARL'S JR RESTAURANT
@ RUSSELL ROAD & EASTERN AVE.
McCARRAN MARKETPLACE
FOR: S.L. INVESTMENTS, MR. STEVE LARSON
CLARK COUNTY, NEVADA

PROJ.NO.	13520701.00
PROJ.ARCH.	G.G.WILSON,AIA
PROJ.MGR.	MVM
JOB CAPT.	MVM
TECH'N	
ARCH.CHK.	GGW
PH-2/3	02FEB07
PH-4	30MAR07
PH-5	02MAY07

REVISIONS

PRINTS REQUIRE ARCHITECT'S SEAL & SIGN. FOR PROOF OF VALIDITY

DAVID O. GRANTLEY
EXPIRES 12/31/08
ELECTRICAL
No.7581
PROFESSIONAL ENGINEER
STATE OF NEVADA

LV070018

ELECTRICAL ROOF PLAN & DETAILS

SHT.NO. E-6

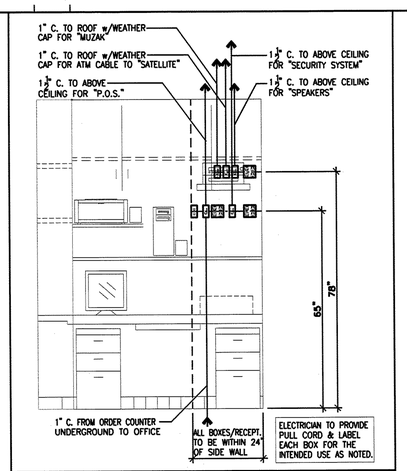

OFFICE ELEVATION "A" | SCALE: 1/2"=1'-0" | 1

LIGHTING FIXTURE SCHEDULE

TYPE	DESCRIPTION	MANUFACTURER / CATALOG NUMBER	LAMP(S) #	LAMP(S) TYPE	VOLTS	WATTS	REMARKS
A	2x4, 3-LAMPS, RECESSED FLUORESCENT FIXTURE EXP T-BAR CLG, STEEL HINGED FRAME, 0.125" PRISMATIC LENS, T8 LAMPS, ELECTRONIC HIGH FREQUENCY BALLAST (2) BALLAST - DUAL LEVEL SWITCH	SECURITY LIGHTING SYSTEM # J24-332G-FSA12-.125-EB8120-FO865-C388	3	FO32W/T8/SPX6500	120	91	
AE	SAME AS 'A' WITH INTEGRAL 90-MIN. EMERGENCY LIGHTING UNIT, MINIMUM OF 1900-LUMEN OUTPUT	SECURITY LIGHTING SYSTEM # J24-332G-FSA12-.125-EB8120-EL-FO865-C388	3	FO32W/T8/SPX6500	120	91	
B	1x4, 2-LAMP, RECESSED FLUORESCENT FIXTURE EXP T-BAR CLG, STEEL HINGED FRAME, 0.125" PRISMATIC LENSE, T8 LAMPS, ELECTRONIC HIGH FREQUENCY BALLAST	SECURITY LIGHTING SYSTEM #J14-232G-FSA12-0.125-EB8120-FO865-C388	2	32W F32T8/SPX6500	120	64	
D	CAST ALUMINUM ADJUSTABLE NARROW FLOODLIGHT, METAL HALIDE W/ DEEP BAFFLE, INSTALL 6" ABOVE CONC. BASE. SEE DETAIL ON SHEET 3/A-2	RUUD # PN3440-M (FIXTURE) RUUD # DB-16 (DEEP BAFFLE)	1	400W MH/U CLEAR	208	415	FLAG POLE LIGHT
F	ELECTRONIC LED EXIT SIGN	SECURITY LIGHTING SYSTEM #SESRBNE		LED	120	4.5	PROVIDE BATTERY PACK UNIT, 90 MINUTE DURATION (MINIMUM) 1
J	RECESSED 10" SQUARE PRISMATIC LENS METAL HALIDE CANOPY DOWNLIGHT	SECURITY LIGHTING SYSTEM #852DL 100MHFPOWWH120	1	M100/C/U CLEAR	208	100	DAMP LOCATION
L / LE	RECESSED 14" SQUARE PRISMATIC LENS METAL HALIDE CANOPY DOWNLIGHT	SECURITY LIGHTING SYSTEM #853-UCL-70MH-WH-120	1	M70/C/U CLEAR	208	70	DAMP LOCATION. 'LE' INDICATES EMERGENCY, PROVIDE BATTERY PACK UNIT, 90 MINUTE DURATION (MINIMUM) . 1
N / NE	8" APERTURE RECESSED COMPACT FLUORESCENT LENSED DOWNLIGHT, CLEAR REFLECTOR, WHITE TRIM RING, HORIZONTAL LAMP	SECURITY LIGHTING SYSTEM #D 4 2 26E120/4470W	2	QUAD TUBE ELECTRONIC	120	26	NE' INDICATED EMERGENCY, PROVIDE BATTERY PACK UNIT, 90 MINUTE DURATION (MINIMUM) .
R	DECORATIVE PENDANT	SECURITY LIGHTING SYSTEM #SLS P 5069-MODSA/32CFL	1	QUAD	120	13	MOUNT +78" AFF
T	4'-2 LAMP, PRISMATIC WRAP AROUND FLUORESCENT	SECURITY LIGHTING SYSTEM #XX 232 EB8120 FO865	2	T8 SPX6500	208	64	WALL MOUNTED, DAMP LOCATION, 0 DEGREE LOW TEMP BALLAST
FW1	TYPE 3 METAL HALIDE LAMP DISTRIBUTION, WITH 2-SHOE BOX TYPE FIXTURE (@ 180 DEG MOUNTING ORIENTATION). PROVIDE HOUSE OR GLARE SHIELDS AS REQUIRED. MOUNT FIXTURE ON A 5" x 20FT SQUARE STEEL POLE OR APPROVED EQUAL.	LITHONIA : (POLE) SSS-20-5* (FIXTURE HEAD) KSF2-400-R3-208-(2)SP04-LPI	2	MH400-PS	208	900	PROVIDE ALL REQUIRED ARM-MOUNT BRAKETS AND ARM ORIENTATION PER PLAN.
FW2	TYPE 3 METAL HALIDE LAMP DISTRIBUTION, WITH SINGLE SHOE BOX TYPE FIXTURE. PROVIDE HOUSE OR GLARE SHIELDS AS REQUIRED. MOUNT FIXTURE ON A 5" x 20FT SQUARE STEEL POLE OR APPROVED EQUAL.	LITHONIA : (POLE) SSS-20-5* (FIXTURE HEAD) KSF2-400-R3-208-SP04-LPI	1	MH400-PS	208	450	PROVIDE ALL REQUIRED ARM-MOUNT BRAKETS.
FW3	TYPE 3 METAL HALIDE LAMP DISTRIBUTION, WITH 3-SHOE BOX TYPE FIXTURE (@ 120 DEG MOUNTING ORIENTATION). PROVIDE HOUSE OR GLARE SHIELDS AS REQUIRED. MOUNT FIXTURE ON A 5" x 20FT SQUARE STEEL POLE OR APPROVED EQUAL.	LITHONIA : (POLE) SSS-20-5* (FIXTURE HEAD) KSF2-400-R3-208-(3)SP04-LPI	3	MH400-PS	208	1350	PROVIDE ALL REQUIRED ARM-MOUNT BRAKETS AND ARM ORIENTATION PER PLAN.

NOTES:

07-19993
Clark County Dev. Services
Building Services Division
AUG 06 2007 RL
Reviewed and Accepted
Willdan

THIS DRAWING IS AN INSTRUMENT OF SERVICE BETWEEN THE ARCHITECT AND HIS CLIENT, BUT REMAINS THE PROPERTY OF THE ARCHITECT.
© ALL RIGHTS RESERVED 2005

planning/interior design
STUDIOS...
(702)876-0668
professional corp / certified n.c.a.r.b.
4175 South Riley Street
Suite 200
Las Vegas, NV 89147
Tel: 702.873.0670
Fax: 702.873.0598
www.shnevada.com
MEP: SH NEVADA

architecture/engineering/site
GARY GUY WILSON AIA
7625 South Industrial Road, Suite#100
Las Vegas, Nevada 89139

CONSULTANTS:
CIVIL: CIVILWORKS, INC.
STRUCTL: WRIGHT ENGINEERS

ELECTRICAL LIGHTING FIXTURE SCHEDULE AND DETAIL

CARL'S JR RESTAURANT
@ RUSSELL ROAD & EASTERN AVE.
McCARRAN MARKETPLACE
FOR: S.L. INVESTMENTS, MR. STEVE LARSON
CLARK COUNTY, NEVADA

PROJ.NO.	13520701.00
PROJ.ARCH.	G.G.WILSON,AIA
PROJ.MGR.	MVM
JOB CAPT.	MVM
TECH'N	
ARCH.CHK.	GGW
PH-2/3	02FEB07
PH-4	30MAR07
PH-5	02MAY07

REVISIONS
1 BLDG DEPT COMMENTS 06/12/07

PRINTS REQUIRE ARCHITECT'S SEAL & SIGN. FOR PROOF OF VALIDITY

DAVID O. GRANTLEY
EXPIRES 12/31/08
ELECTRICAL
No.7581
PROFESSIONAL ENGINEER
STATE OF NEVADA

LV070018

SHT.NO. E-7

COM*check* Software Version 3.3.1

Lighting Compliance Certificate

2003 IECC

Report Date: 04/17/07

Data filename: P:\PRJ\LV070018\ELEC\SC\ltg-calc-carls-jr.CCK

Section 1: Project Information

Project Title: Carl's Fr Restaurant

Construction Site:	Owner/Agent:	Designer/Contractor:
Craig Road & Revere Street - Craid Road Promenade North Las Vegas, NV	GGW ARchitects 7625 S. Industrial Road, #100 Las Vegas, NV 89139 702.876.0668	SH Nevada 4175 South Riley Street, Ste200 Las Vegas, NV 89147 702.873.0670

Section 2: General Information

Building Use Description by:
Project Type: **New Construction**

Building Type	Floor Area
Restaurant	3198

Section 3: Requirements Checklist

Interior Lighting:

☐ 1. Total actual watts must be less than or equal to total allowed watts.

Allowed Watts	Actual Watts	Complies
5117	3359	YES

☐ 2. Exit signs 5 Watts or less per side.

Exterior Lighting:

☐ 3. Efficacy greater than 45 lumens/W.
Exceptions:

Specialized lighting highlighting features of historic buildings; signage; safety or security lighting; low-voltage landscape lighting.

Controls, Switching, and Wiring:

☐ 4. Independent controls for each space (switch/occupancy sensor).
Exceptions:

Areas designated as security or emergency areas that must be continuously illuminated.

Lighting in stairways or corridors that are elements of the means of egress.

☐ 5. Master switch at entry to hotel/motel guest room.

☐ 6. Individual dwelling units separately metered.

☐ 7. Each space provided with a manual control to provide uniform light reduction by at least 50%.
Exceptions:

Only one luminaire in space;

An occupant-sensing device controls the area;

The area is a corridor, storeroom, restroom, public lobby or guest room;

Areas that use less than 0.6 Watts/sq.ft.

☐ 8. Automatic lighting shutoff control in buildings larger than 5,000 sq.ft.

☐ 9. Photocell/astronomical time switch on exterior lights.
Exceptions:

Lighting intended for 24 hour use.

☐ 10. Tandem wired one-lamp and three-lamp ballasted luminaires (No single-lamp ballasts).
Exceptions:

Electronic high-frequency ballasts; Luminaires on emergency circuits or with no available pair.

Section 4: Compliance Statement

Compliance Statement: The proposed lighting design represented in this document is consistent with the building plans, specifications and other calculations submitted with this permit application. The proposed lighting system has been designed to meet the 2003 IECC, Chapter 8, requirements in COMcheck Version 3.3.1 and to comply with the mandatory requirements in the Requirements Checklist.

Name - Title _____ Signature _____ Date _____

COM*check* Software Version 3.3.1

Lighting Application Worksheet

2003 IECC

Report Date:

Data filename: P:\PRJ\LV070018\ELEC\SC\ltg-calc-carls-jr.CCK

Section 1: Allowed Lighting Power Calculation

A	B Floor Area	C Allowed Watts / ft2	D Allowed Watts
Restaurant	3198	1.6	5117
		Total Allowed Watts =	5117

Section 2: Actual Lighting Power Calculation

A Fixture ID : Description / Lamp / Wattage Per Lamp / Ballast	B Lamps/ Fixture	C # of Fixtures	D Fixture Watt.	E (C X D)
Linear Fluorescent 1: A/AE: 2x4 Fluorescent - 3 lamp / 48" T8 32W / Electronic	3	27	91	2457
T8 / T12 Fluorescent 2: B/BE: 1X4 Fluorescent - 2 lamp / 48" T8 32W / Electronic	2	8	64	512
Compact Fluorescent 1: N/NE: 8" Downlight / Quad 2-pin 18W / Electronic	2	10	26	260
Compact Fluorescent 2: R: Decorative Pendant / Twin Tube 13W / Electronic	1	10	13	130
			Total Actual Watts =	3359

Section 3: Compliance Calculation

If the Total Allowed Watts minus the Total Actual Watts is greater than or equal to zero, the building complies.

Total Allowed Watts = 5117
Total Actual Watts = 3359
Project Compliance = 1758

Lighting PASSES: Design 34% better than code.

07-19993
Clark County Dev. Services
Building Services Division
AUG 06 2007 DL
Reviewed and Accepted
Willdan

THIS DRAWING IS AN INSTRUMENT OF SERVICE BETWEEN THE ARCHITECT AND HIS CLIENT, BUT REMAINS THE PROPERTY OF THE ARCHITECT.
© ALL RIGHTS RESERVED 2005

architecture/engineering/site
GARY GUY WILSON AIA
7625 South Industrial Road, Suite#100
Las Vegas, Nevada 89139
planning/interior design
STUDIOS...
(702)876-0668
professional corp / certified n.c.o.r.b.

MEP: SH NEVADA
4175 South Riley Street
Suite 200
Las Vegas, NV 89147
Tel: 702.873.0670
Fax: 702.873.1098
www.shnevada.com

CONSULTANTS:
CIVIL: CIVILWORKS, INC.
STRUCTL: WRIGHT ENGINEERS

ELECTRICAL SYMBOLS LEGEND, GENERAL NOTES, ABBREVIATIONS & SHEET INDEX

CARL'S JR RESTAURANT
@ RUSSELL ROAD & EASTERN AVE.
McCARRAN MARKETPLACE
FOR: S.L. INVESTMENTS, MR. STEVE LARSON
CLARK COUNTY, NEVADA

PROJ.NO.	13520701.00
PROJ.ARCH.	G.G.WILSON,AIA
PROJ.MGR.	MVM
JOB CAPT.	MVM
TECH'N	
ARCH.CHK.	GGW
PH-2/3	02FEB07
PH-4	30MAR07
PH-5	02MAY07

REVISIONS

PRINTS REQUIRE ARCHITECT'S SEAL & SIGN. FOR PROOF OF VALIDITY
DAVID O. BRANTLEY
EXPIRES 12/31/08
ELECTRICAL
No.7581
PROFESSIONAL ENGINEER STATE OF NEVADA
4/19/07

LV070018

SHT.NO. E-8

IECC LIGHTING COMPLIANCE CERTIFICATE

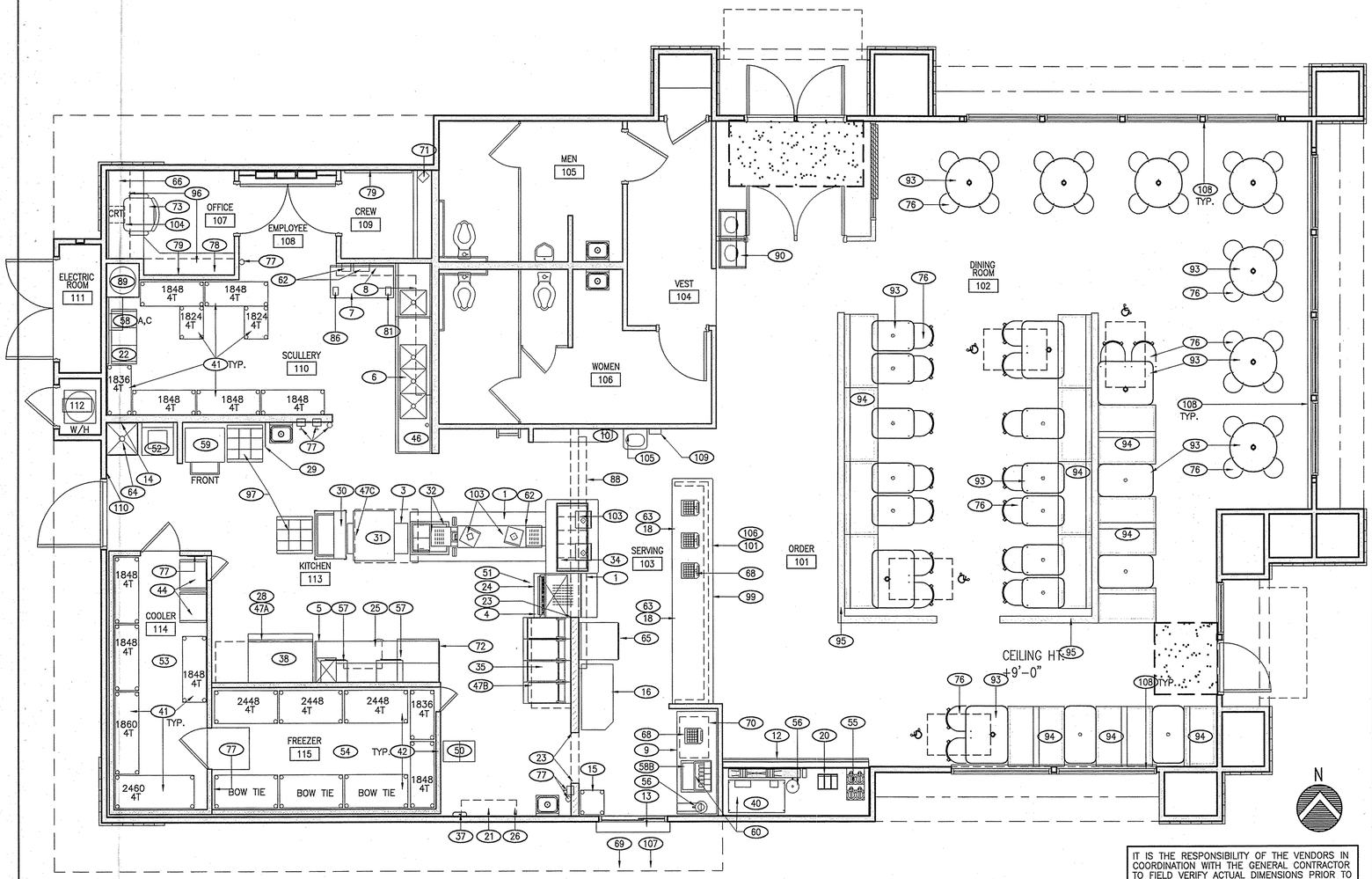

IT IS THE RESPONSIBILITY OF THE VENDORS IN COORDINATION WITH THE GENERAL CONTRACTOR TO FIELD VERIFY ACTUAL DIMENSIONS PRIOR TO FABRICATION OF OWNER PROVIDED EQUIPMENT.

SHOULD THERE BE ANY CONFLICT BETWEEN DIMENSIONS AS SHOWN IN PLANS AND ACTUAL CONDITIONS, THE VENDOR MUST NOTIFY AND SECURE IMMEDIATE APPROVAL OF CHANGES FROM OWNER/ARCHITECT. FAILURE TO COMPLY WITH THE ABOVE-MENTIONED PROCEDURE, THE VENDOR ASSUMES ALL COST INCURRED BY RESULTING CHANGES AND RETROFIT.

GENERAL EQUIPMENT SPECIFICATIONS ARE AN INTEGRAL PART OF THIS PROJECT.

KITCHEN EQUIPMENT PLAN

SCALE: 1/4"=1-0" (11)

NO.	DESCRIPTION	DETAIL	PROV. BY	MANUF. BY	INSTALLED BY
1.	MAIN COOK COUNTER – PAPER BINS, FRY DUMP	K-4	OWNER	K.E.C.	K.E.C,E.C.,P.C.
2.					
3.	BROILER CART	----	OWNER	OWNER	K.E.C.
4.	FRY DUMP	----	OWNER	K.E.C.	K.E.C.,E.C.
5.	BACK COUNTER	K-5	OWNER	K.E.C.	K.E.C.,E.C.,P.C.
6.	POT SINKS & VEGETABLE SINK	1-4/K-5	OWNER	K.E.C.	K.E.C.,E.C.,P.C.
7.	WORK TABLE	----	OWNER	OWNER	K.E.C.
8.	SHELF ABOVE POT SINKS	1-4/K-5	OWNER	OWNER	K.E.C.
9.	DRINK SERVICE COUNTER	15/K-6	OWNER	K.E.C.	K.E.C.
10.	S.ST. PASS OUT SHELF	16/K-6	OWNER	K.E.C.	K.E.C.
11.	S.ST. CABINET	----	OWNER	---	K.E.C.
12.	DRINK STATION CABINET	17,18/K-6	OWNER	K.E.C.	K.E.C.,E.C.,P.C.
13.	DRIVE-THRU WINDOW S.ST. TOP	23/K-6	OWNER	K.E.C.	G.C.
14.	STAINLESS STEEL "Z" METAL AT MOP SINK	4/A-3	OWNER	K.E.C.	G.C.
15.	SHELF UNIT	----	OWNER	---	K.E.C.
16.	DRIVE THRU CABINET	----	OWNER	K.E.C.	K.E.C.
17.	MISC. S.ST. DIVIDERS	----	OWNER	K.E.C.	K.E.C.
18.	ORDER COUNTER CABINETS	A-12	OWNER	---	G.C.
19.	LID DISPENSER AT DRIVE-THRU DRINK DISPENSER	12/K-6	OWNER	K.E.C.	K.E.C.
20.	CONDIMENT STAND & LID DISP. AT SELF-SERVE DRINK DISPENSER	----	OWNER	OWNER	K.E.C.
21.	S.ST. SYRUP SHELF	----	OWNER	K.E.C.	K.E.C.
22.	"BAG IN BOX" RACK	----	OWNER	---	K.E.C.
23.	S.ST. JAMBS	3/K-6	OWNER	K.E.C.	K.E.C.
24.	BIG SCOOP DISPENSER	----	OWNER	OWNER	K.E.C.
25.	STEAMER AT BACK LINE	----	OWNER	OWNER	K.E.C.
26.	SHAKE BLENDER	----	OWNER	---	K.E.C.
27.	S.ST. PREP COUNTER AND SHELF	9/K-5	OWNER	K.E.C.	K.E.C.
28.	GRIDDLE TIMER	----	OWNER	---	K.E.C.
29.	S/S DIVIDER	----	OWNER	K.E.C.	K.E.C.
30.	MEAT FREEZER UNIT (SELF CONTAINED)	----	OWNER	---	K.E.C.,E.C.
31.	BROILER UNIT	----	OWNER	---	K.E.C.,E.C.,P.C.,RM
32.	FOOD WARMER UNITS (2) FULL SIZE AUTO-FILL	----	OWNER	K.E.C.	K.E.C.,E.C.,P.C.
33.	-SPACE-	----	----	---	---
34.	SANDWICH HOLDING UNIT	----	OWNER	---	K.E.C.,E.C.
35.	4-BAY FRYER UNIT w/FILTER UNIT	----	OWNER	---	K.E.C.,E.C.,P.C.,RM
36.	VAT FRYER	----	OWNER	---	K.E.C.,E.C.,P.C.,RM
37.	DIPPER WELL	----	OWNER	---	G.C.
38.	GRIDDLE UNIT 48"	----	OWNER	JADE RANGE	K.E.C.,P.C.,RM
39.	SINGLE FRYER	----	OWNER	---	K.E.C.,E.C.,P.C.,RM
40.	SELF-SERVE DRINK DISPENSER UNIT	----	OWNER	---	K.E.C,E.C.,P.C.,OWNER
41.	SHELVING (LOWEST SHELF TO BE 6" ABOVE FLR.)	----	OWNER	---	K.E.C.
42.	COOLER / FREEZER SHELVING	----	----	---	---
43.	-SPACE-	----	----	---	---
44.	THAW RACKS	----	OWNER	---	K.E.C.
45.	-SPACE-	----	----	---	---
46.	PRE-RINSE UNIT	----	OWNER	---	K.E.C.,P.C.
47.	HOOD UNITS- A) GRIDDLE B) FRYER C) BROILER	"M" DWG's	OWNER	---	K.E.C.,G.C.
48.	QUICK DISCONNECT SOCKET, PLUG, HOSE, & STRAP	P-3.1	OWNER	---	K.E.C.,G.C.
49.					
50.	ICE CREAM STAGING FREEZER	----	OWNER	---	K.E.C.
51.	HOT HOLDING CABINET	----	OWNER	---	K.E.C.
52.	CLOTHES WASHER	----	OWNER	---	OWNER
53.	COOLER UNIT	----	OWNER	---	MFR.,E.C.,P.C.
54.	FREEZER UNIT	----	OWNER	---	MFR.,E.C.,P.C.
55.	(1) COFFEE BREWER UNIT, AIRPOTS, & RACK	----	OWNER	---	MFR.,E.C.,P.C.
56.	ICE TEA DISPENSER UNIT	----	D.C.	---	OPS
57.	MICROWAVE OVEN (1) STANDARD	----	OWNER	PANASONIC	OWNER,E.C.,RM
58.	DRINK SYSTEM: A)PANEL BOARD B)D.T. DISP. C) CARBONATOR D) LINE KIT	----	OWNER	---	OWNER,E.C.,P.C.
59.	ICE MACHINE & BIN	----	OWNER	---	MFR,E.C.,P.C.
60.	ICE MACHINE ON DRINK DISPENSERS	----	OWNER	---	E.C.,P.C.
61.					
62.	S/S HOLDERS FOR DAY DOTS & WRAPS	----	OWNER	K.E.C.	K.E.C.
63.	CUP DISPENSERS	----	----	---	---
64.	MOP SINK RACK	----	D.C.	---	G.C.
65.	HALF SIZE REFR. BASE w/S.ST. TOP & CASTERS	----	OWNER	---	K.E.C.
66.	MUSIC SYSTEM	----	OWNER	---	MFR.,E.C.
67.	-SPACE-	----	----	---	---
68.	COMPUTER CASH REGISTERS	----	OWNER	P.O.S. MFR.	MFR.,E.C.
69.	SPEED OF SERVICE LOOP SYSTEM	A-2	OWNER	P.O.S. MFR.	MFR.,G.C.
70.	UNDER COUNTER SAFE – BUILT-IN – SEE NOTES ON A-12	A-12	OWNER	---	G.C.
71.	VIDEO MONITOR & THEFT BRACKET	----	OWNER	---	G.C.
72.	HALF SIZE REFRIG. BASE w/COLD TOP	----	OWNER	---	K.E.C.
73.	OFFICE CHAIR	----	OWNER	---	OWNER
74.	-SPACE-	----	----	---	---
75.	BOOSTER SEATS / HIGH CHAIRS	----	D.C.	---	OPS
76.	DINING ROOM CHAIRS	----	OWNER	---	S.C.
77.	ANSUL FIRE PROTECTION SYSTEM, FIRE AXES, EXTINGUISHERS	K-3	OWNER	---	MFR,GC,EC
78.	FIRST AID KIT	----	OWNER	---	OWNER
79.	BULLETIN BOARD	----	OWNER	---	G.C.
80.	SALSA BAR – (ONLY IN GREEN BURRITO CONFIG.)	----	----	---	---
81.	ONION SLICER	----	OWNER	---	G.C.
82.	GRAPHICS	A-11	OWNER	---	G. C.
83.	-SPACE-	----	----	---	---
84.	-SPACE-	----	----	---	---
85.	REFRIGERATION SYSTEM	K-2	OWNER	---	MFR.
86.	CAN OPENER	----	OWNER	---	G.C.
87.	-SPACE-	----	----	---	---
88.	SIGNS & MENU BOARD	SN-1	OWNER	MFR.	MFR.,E.C.
89.	BULK CO2 TANK w/SERVICE ACCESS DOOR	12/A-3	OWNER	---	G.C./MFR.
90.	TRASH STANDS W/LINERS	4/K-7	OWNER	S.C.	S.C.,G.C.
91.	CORE DRILLED BASES	K-7	OWNER	S.C.	S.C.
92.	TABLE BASES	---	OWNER	S.C.	---
93.	TABLE TOPS	---	OWNER	S.C.	S.C.
94.	BOOTHS	---	OWNER	S.C.	S.C.
95.	SEATING BULKHEADS	---	OWNER	S.C.	S.C.
96.	OFFICE SHELF, DESK, & CABINET	8/A-12	OWNER	S.C.	S.C.
97.	BUN RACKS	---	---	---	---
98.	ALUMINUM CAP	---	OWNER	S.C.	S.C.
99.	ORDER COUNTER FACE	A-12	OWNER	S.C.	S.C.
100.	QEUEING LINE	---	---	---	---
101.	SOLID SURFACE COUNTER TOP	A-12	OWNER	S.C.	S.C./G.C.
102.	POS SYSTEM	---	OWNER	OWNER	OWNER
103.	C.R.T.'S-"IRIS" SYSTEM (MONITORS)	---	OWNER	---	MFR.
104.	BACK OFFICE COMPUTER, PRINTER	---	OWNER	---	MFR.,E.C.
105.	SECURITY SYSTEM	---	---	---	---
106.	ATM	---	---	---	---
107.	DRIVE THRU SYSTEM	A-2	OWNER	OWNER	MFR.,G.C.
108.	WINDOW COVERING – SEE NOTE #7	---	OWNER	ROLL-A-SHADE	MFR.,G.C.
109.	WAITRESS CALL		G.C.	G.C.	G.C.
110.	BACK DOOR ALARM	---	---	---	---

EQUIPMENT SCHEDULE (4)

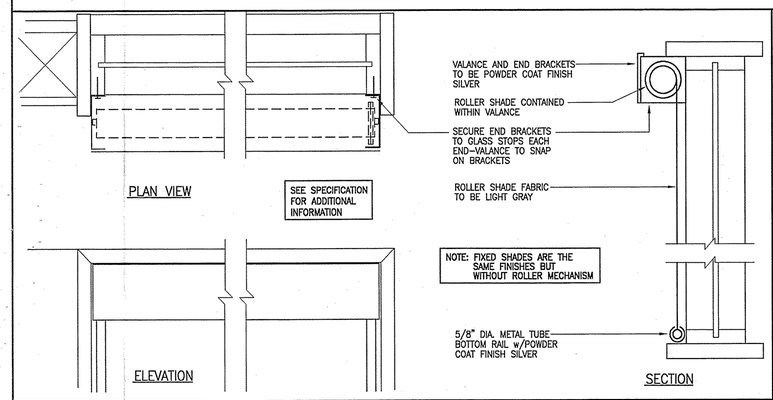

ROLLER SHADES DETAIL – ITEM #108

SCALE: NONE (20)

1. ALL EQUIPMENT MUST MEET "NATIONAL SANITATION FOUNDATION" STANDARDS FOR CONSTRUCTION AND INSTALLATION CRITERIA.
2. ANSUL FIRE PROTECTION SYSTEM SHALL BE INSTALLED WITH TOTAL COVERAGE OF ALL COOKING SURFACES EXHAUST DUCTS & HOODS. SYSTEM SHALL INCLUDE AUTO-SHUT OFF OF GAS FUEL TO APPLIANCE. INSTALLATION WILL CONFORM TO "NFPA" PAMPHLET 96 & LOCAL FIRE DEPARTMENT REGULATIONS.
3. CONTRACTOR TO INSTALL THE FOLLOWING ITEMS FURNISHED BY OWNER: INTERIOR SIGN PACKAGE, CUP DISPENSERS, MOP RACK, BIKE RACK, AND WASTE CONTAINER ALSO SCHEDULE FOR INSTALLATION IF APPLICABLE PLAYGROUND EQUIP. PATIO SEATING. SEE SCHEDULE & SPECS. FOR ENTIRE LIST.
4. PROVIDE FOUR (4) WHEELCHAIR SEATING SPACES AS SHOWN ON PLAN. PROVIDE A TABLE OR COUNTER HEIGHT OF 28" TO 34" ABOVE THE FLOOR w/A 27" HIGH x 30" WIDE x 19" DEEP KNEE SPACE NOTED "H.C."
5. EMPLOYEE WORK AREAS SHALL BE ACCESSIBLE BY MEANS OF A 36" MIN. AISLE AND A 32" MIN. CLEAR OPENING DOOR WIDTH.
6. ACCESS TO DISABLED SEATING SHALL BE PROVIDED WITH MAIN AISLE NOT LESS THAN 36" IN CLEAR WIDTH.
7. WINDOW TREATMENT ITEM #108 SHALL BE "FIXED" ON NORTH & EAST AND "MOVABLE" ON SOUTH & WEST SIDES OF BUILDING
8. ALL EQUIPMENT TO BE UL LISTED.
9. WALK-IN COOLERS SHALL COMPLY WITH THE 2000 IBC, SECTION 2603.4.1.3,INCLUDING A FOAM PLASTIC THICKNESS LESS THAN OR EQUAL TO 4 INCHES, MAXIMUM FLAME SPREAD OF 75 AND THAT THE FOAM PLASTIC IS COVERED BY A METAL FACING NOT LESS THAN 0.032 IN, THICK ALUMINUM OR CORROSION RESISTANT STEEL HAVING A MINIMUM BASE METAL THICKNESS OF 0.016 INCHES.

NOTES

SCALE: NONE (16)

G.C.	GENERAL CONTRACTOR
K.E.C.	KITCHEN EQUIPMENT CONTRACTOR
E.C.	ELECTRICAL CONTRACTOR
P.C.	PLUMBING CONTRACTOR
S.C.	SEATING CONTRACTOR
F.P.C.	FIRE PROTECTION CONTRACTOR
MFR.	MANUFACTURER
OPS.	OWNERS OPERATIONS
D.C.	DISTRIBUTION CENTER*
OWNER	C.K.E. OR FRANCHISEE
RM	R & M TO DO "START UP OF THAT EQUIPMENT"
D	DUNNAGE
4T	(4) TIER
⬭	ITEM #

LEGEND

SCALE: NONE (12)

THIS DRAWING IS AN INSTRUMENT OF SERVICE BETWEEN THE ARCHITECT AND HIS CLIENT, BUT REMAINS THE PROPERTY OF THE ARCHITECT.
© ALL RIGHTS RESERVED 2007

GARY G. WILSON ARCHITECTS, PC
planning/interior design
(702)876-0668
professional corp / certified n.c.a.r.b.
architecture/engineering/site
7625 Dean Martin Drive, Suite#100
Las Vegas, Nevada 89139

CONSULTANTS:
CIVIL: CIVILWORKS, INC. ELEC: SH NEVADA
STRUCTL: WRIGHT ENGINEERS MECH: SH NEVADA

CARL'S JR RESTAURANT
@ RUSSELL ROAD & EASTERN AVE.
McCARRAN MARKETPLACE
FOR: S.L. INVESTMENTS, MR. STEVE LARSON
CLARK COUNTY, NEVADA

PROJ.NO.	13520701.00
PROJ.ARCH.	G.G.WILSON,AIA
PROJ.MGR	MVM
JOB CAPT	MVM
TECH'N	VAN/EMD
ARCH.CHK	GGW
PH-2/3	02FEB07
PH-4	30MAR07
PH-5	02MAY07

REVISIONS
07-19993
Clark County Dev. Services
Building Services Division
AUG 06 2007 AL
Reviewed and Accepted
Wilidan

PRINTS REQUIRE ARCHITECT'S SEAL & SIGN. FOR PROOF OF VALIDITY

GARY G. WILSON REGISTERED No. 545 STATE OF NEVADA
APR 19 2007

EQUIPMENT PLAN

SHT.NO. K-1

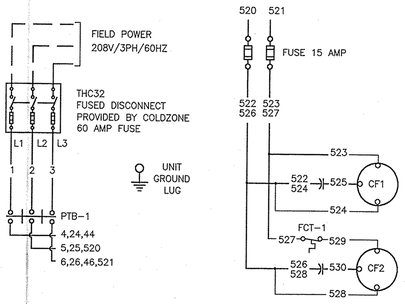

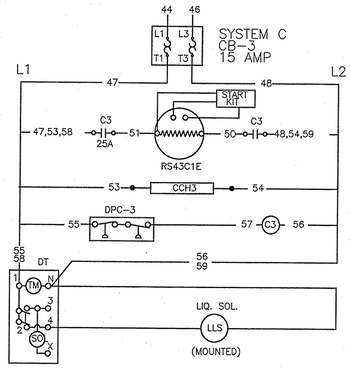

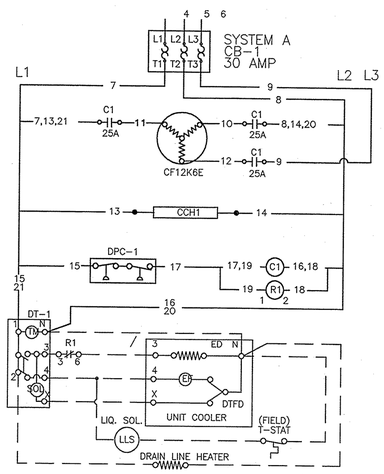

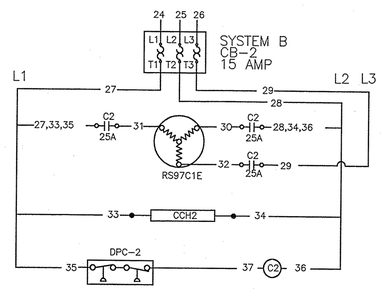

ELECTRIC DEFROST WIRING DIAGRAM

SCALE: NONE (D)

IDENT. SYSTEM	IDENT. ITEM	FIXTURES DESCRIPTION	FIXT.° F FIXT.	FIXT.° F SUCT.	REFRIG. R-	COMPRESSORS MODEL NO.	COMPRESSORS H.P.	COMPRESSORS ELECTRICAL CHARACTERISTIC AT 60 HZ. R.A	V	PH	MBH AT 95 F	DEFROST *	EVAPORATOR COILS QUANTITY	MODEL NO.	MFR. / REMARKS	FAN 1 PH AMP	FAN 1 PH V	HEATER AMP	HEATER V	HEATER PH	TOTAL UNIT AMP. [RLA]	LINE SIZES ** ROUTE +	SUCTION	RISER	LIQUID	DISCH.	DRAIN	ACCESSORIES DEFROST OPTION NO.	CRANK CASE HEATER	HEAD PRESS-URE CONT.	COLDSWER	FURNISHED BY (SEE CODE) T-STAT	SOL. VALVE	TX. VALVE	REMARKS
A		WALK-IN FREEZER	-10	-20	404A	CS33K3E	3.0	20.7	208	3	9.7	E	1	AE34-105B	COLDZONE	3.3	208	13.0	208	1	24.0	S	7/8		3/8			ED-10	FI	FI		FL	FL	FL	
B		WALK-IN COOLER	35	25	404A	RS97C1E	1.0	7.0	208	3	10.6	0	1	AA28-106B	COLDZONE	4.0	115				7.0	S	7/8		3/8				FI	FI		FL	FL	FL	
D		ICE MAKER		0	22	– CONDENSER CIRCUIT ONLY –						0	1	KM1600MRE	MANITOWOC											5/8	3/8								
MINI-PAK RACK		MINI-PAK CONDENSER																																	
		– FAN MOTORS (2)					1/2	4.2	208	1											8.4														

LEGEND | * O– OFF CYCLE E– ELECTRIC G– GRAVITY [W/TIMER] | + S– SINGLE M– MAIN B– BRANCH | ** VERIFY LINE SIZES WITH JOB SITE CONDITIONS

SUPPLY CODES:
MFR– FURNISH WITH FIXTURE
FL – CZ TO FURNISH AND SHIP LOOSE
FI – CZ TO FURNISH AND INSTALL ON UNIT
RC – FURNISH AND INSTALL BY REF. CONTRACTOR

NOTES:
- REFRIGERATION SYSTEM INCLUDES A MAIN FUSED DISCONNECT SWITCH FACTORY INSTALLED.
- ALL LOW TEMPERATURE SYSTEMS ARE SUPPLIED WITH SUCTION LINE ACCUMULATORS FACTORY INSTALLED.
- SYSTEM "E" TO SIT ON PLATFORM NEXT TO THE MPL–2CZ, ELECTRICAL FOR SYSTEM FROM COLDZONE SYSTEM. REFRIGERATION PIPE SIZE SELECTIONS ROUTING HAVE BEEN BASED ON PARTIAL PLANS AND SPECIFICATIONS AND ARE TO BE USED AS A GUIDE ONLY.
- COLDZONE DOES NOT AND WILL NOT ACCEPT RESPONSIBILITY FOR PIPE SIZING.
- DISTANCES, VERTICAL RISES AND REFRIGERATION PIPE SIZING MUST BE BASED ON ACTUAL JOB SITE CONDITIONS.
- IT IS THE INSTALLING CONTRACTORS RESPONSIBILITY TO FOLLOW ALL APPLICABLE CODES AND CURRENT REFRIGERATION INDUSTRY STANDARDS AND PRACTICES WHEN INSTALLING, CHARGING AND STARTING UP THE SYSTEMS.

POWER SUPPLY: 208V/3PH/60HZ
CONNECTED LOAD= 41.8 AMPS
FUSE SIZE: 60 AMPS
MINIMUM AMPACITY= 53.6 AMPS

COLDZONE ENGINEERING SUMMARY

SCALE: NONE (1)

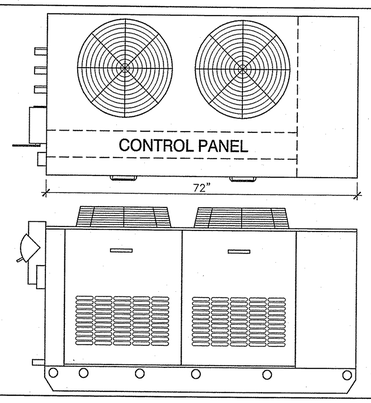

ALL DETAILS AND INFORMATION, EXCEPT DETAIL G, DISCLOSED HEREIN WAS ORGANIZED BY AND IS THE PROPERTY OF COLDZONE AND EXCEPT FOR RIGHTS EXPRESSLY GRANTED TO THE CUSTOMER, COLDZONE RESERVES ALL PATENT, PROPERTY, DESIGN, USE, SALE, MANUFACTURING AN REPRODUCTION RIGHTS THERETO.

NOTES:
1. UNIT WEIGHT IS 640 LBS
2. INSTALLATION CLEARANCE REQUIRES 3 FT ON ALL SIDES

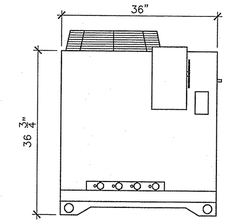

UL
MEA

COLDZONE MODEL #MPL-2CZ

SCALE: NONE (A)

ENGINEERING GUIDE SPECIFICATION FOR REMOTE REFRIGERATION PACKAGE MINI–PAK REFRIGERATION SYSTEM

ITEM NO. 85 REMOTE REFRIGERATION PACKAGE.

THE REFRIGERATION PACKAGE SHALL BE A PRE–ENGINEERED AND FACTORY ASSEMBLED UNIT TRADE NAME "MINI–PAK", AS MANUFACTURED BY COLDZONE, A DIVISION OF HEAT TRANSFER PRODUCTS GROUP OF ARDCO, INC., 221 SOUTH BERRY STREET, BREA, CA. 92822. PHONE: (714) 529–4461, FAX: (714) 529–8503.

CONTRACTOR SHALL FURNISH AND INSTALL, WHERE SHOWN ON PLANS (1) COLDZONE U.L. APPROVED "MINI–PAK" AIR–COOLED REMOTE REFRIGERATION PACKAGE, MODEL MPL–2CZ WITH CONTROL PANEL 208 VOLT, 3 PHASE, 60 HERTZ.

1. MINI–PAK REFRIGERATION SYSTEM
   THE ENTIRE UNIT IS TO BE WEATHERPROOFED AND MINIMUM OF TWO COATS OF PAINT SHALL BE APPLIED TO MAKE THE UNIT RUST–PROOF. THE UNIT SHALL BE PROVIDED WITH MULTI–CIRCUITED AIR–COOLED CONDENSER FOR COOLER, FREEZER AND ICE MACHINES. SUCTION LINE FOR LOW TEMPERATURE UNIT MUST BE INSULATED WITH ARMAFLEX.
2. REFRIGERATION UNITS
   A. CRANKCASE HEATER SHALL BE PROVIDED WITH EVERY COMPRESSOR.
   B. AIR–COOLED CONDENSING UNITS SHALL BE SEMI–HERMETIC TYPE (COPELAND). EACH UNIT SHALL BE EQUIPPED WITH HIGH–LOW PRESSURE CONTROL, LIQUID LINE DRIER, SIGHT GLASS, SUCTION AND DISCHARGE VIBRATION ELIMINATOR, AND HEAD PRESSURE CONTROL.
   C. ALL COMPRESSOR UNITS SHALL BE NEW AND FACTORY ASSEMBLED TO OPERATE WITH THE REFRIGERANT SPECIFIED IN THE ENGINEERING SUMMARY SHEET.
3. PRE–PIPING
   A. ALL COPPER TUBING TO BE REFRIGERANT GRADE A.C.R. OR TYPE "L".
   B. ALL TUBING SHALL BE SECURELY SUPPORTED AND ANCHORED WITH CLAMPS.
   C. ALL REFRIGERANT LINES SHALL BE EXTENDED TO ONE SIDE OF THE PACKAGE IN A NEAT AND ORDERLY MANNER.
   D. SILVER SOLDER AND/OR SIL–FOS SHALL BE USED FOR ALL REFRIGERANT PIPING. SOFT SOLDER IS NOT ACCEPTABLE.
   E. ALL PIPING TO BE PRESSURE TESTED WITH NITROGEN AT 300 PSI. AFTER THE CONDENSING UNIT AND COIL HAVE BEEN CONNECTED, THE BALANCE OF THE SYSTEM SHALL BE LEAK TESTED WITH ALL VALVES OPEN.
4. CONTROL PANEL
   A. THE PACKAGE SHALL HAVE FACTORY MOUNTED AND PRE–WIRED CONTROL PANEL COMPLETE WITH FUSED DISCONNECT, COMPRESSOR CIRCUIT BREAKERS, CONTACTORS, AND TIME CLOCKS WIRED FOR SINGLE POINT POWER CONNECTION.
   B. ELECTRICAL CONTRACTOR SHALL PROVIDE AND INSTALL MAIN POWER LINES TO PANEL, AND USE WIRE HARNESS WIRING FOR CONTROL AND DEFROST HEATER BETWEEN THE DEFROST CLOCK AND THE REFRIGERATION FIXTURES, ALL IN COORDANCE WITH THE WIRING DIAGRAM AND LOCAL CODES.

GENERAL NOTES

1. GENERAL CONTRACTOR
   A. CONTRACTORS SHALL VERIFY ALL DIMENSIONS AND COORDINATE WITH OTHER TRADES.
   B. GENERAL CONTRACTOR SHALL PREPARE AND WEATHER PROOF THE PLATFORM AND CURBED OPENINGS.
2. REFRIGERATION CONTRACTOR
   A. THE COMPLETE SYSTEM SHALL BE EVACUATED WITH VACUUM PUMP.
   B. ALL COPPER TUBING TO BE REFRIGERANT GRADE A.C.R. OR TYPE "L".
   C. CHARGE, TEST AND ADJUST EACH UNIT TO BE IN AN OPERATIONAL SYSTEM.
   D. SILVER SOLDER AND/OR SIL–FOS SHALL BE USED FOR ALL REFRIGERANT PIPING. SOFT SOLDER IS NOT ACCEPTABLE.
   E. ALL PIPING TO BE PRESSURE TESTED WITH NITROGEN AT 300 PSI. AFTER THE CONDENSING UNIT AND COIL HAVE BEEN CONNECTED, THE BALANCE OF THE SYSTEM SHALL BE LEAK TESTED WITH ALL VALVES OPEN.
   F. REFRIGERATION CONTRACTOR TO PROVIDE AND INSTALL DRAIN LINE HEATER IN FREEZER TO BE CONNECTED BY ELECTRICAL CONTRACTOR.
3. ELECTRICAL CONTRACTOR
   A. ELECTRICAL CONTRACTOR TO CONNECT DRAIN–LINE HEATER IN FREEZER.
   B. ELECTRICAL CONTRACTOR TO PROVIDE POWER FOR REFRIGERATION PACKAGE AND CONNECT CONTROL AND DEFROST SYSTEM AS CALLED FOR IN THE WIRING DIAGRAM.
   C. ELECTRICAL CONTRACTOR TO PROVIDE COLOR CODED SERVICE FROM THE TIME CLOCK AT THE REFRIGERATION PACKAGE TO THE EVAPORATOR IN THE FIXTURE FOR DEFROST.
   D. ALL ELECTRICAL WIRING AND INSTALLATION SHALL BE IN ACCORDANCE WITH THE WIRING DIAGRAM AND LOCAL CODES.
4. PLUMBING CONTRACTOR
   A. REFRIGERATION CONTRACTOR TO PROVIDE HARD A.C.R. OR TYPE "L" COPPER DRAIN LINES FOR WALK–IN REFRIGERATION AND FREEZER, PITCHED 1/2" PER FOOT OF RUN. IN FREEZER, UNHEATED DRAIN LINE MUST BE OUTSIDE OF INSULATION TO PREVENT FREEZING. TRAP DRAIN LINE OUTSIDE OF REFRIGERATED SPACE TO AVOID ENTRANCE OF WARM AND MOIST AIR.
   B. REFRIGERATION CONTRACTOR TO PROVIDE INDIVIDUAL DRAIN LINE FOR EACH EVAPORATOR UNLESS OTHERWISE CALLED FOR.
   C. ALL PLUMBING INSTALLATION SHALL BE IN ACCORDANCE WITH LOCAL CODES.

NOTES

SCALE: NONE (2)

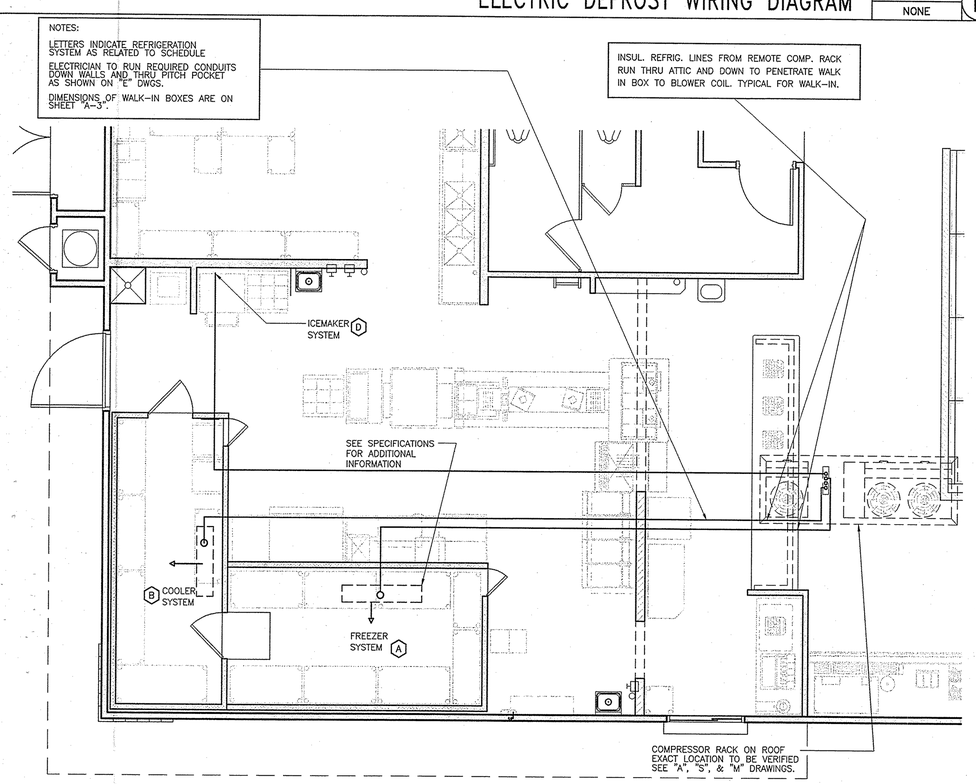

REFRIGERATION PLAN

SCALE: 3/8"= 1'-0" (G)

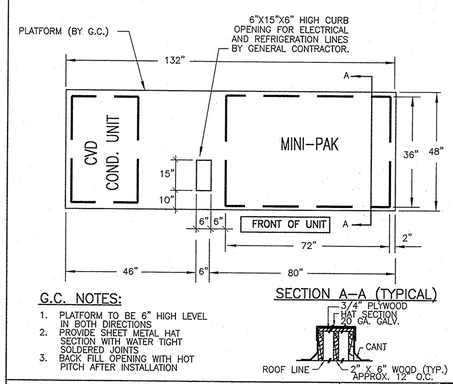

G.C. NOTES:
1. PLATFORM TO BE 6" HIGH LEVEL IN BOTH DIRECTIONS
2. PROVIDE SHEET METAL HAT SECTION WITH WATER TIGHT SOLDERED JOINTS
3. BACK FILL OPENING WITH HOT PITCH AFTER INSTALLATION

SUGGESTED ROOF PAD DETAILS FOR MODEL MPL–2CZ

SCALE: NONE (E)

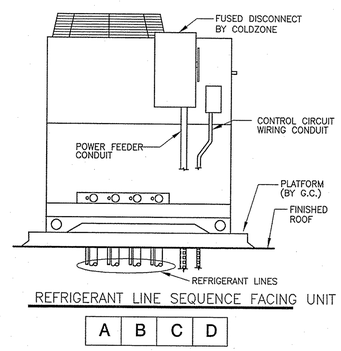

ELEC./REF. LINE INSTLN.

SCALE: NONE (B)

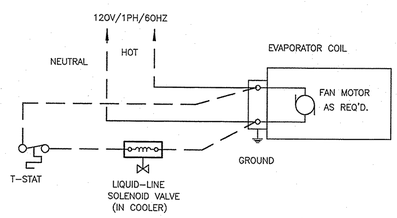

TYP. WIRING DIAGRAM FOR FIXTURES OR COOLER WITH 120 VOLTS FAN MOTORS

SCALE: NONE (F)

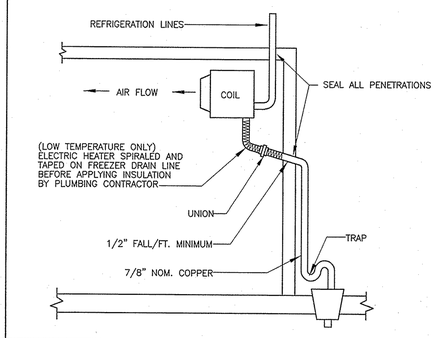

DRAIN LINE DETAIL

SCALE: NONE (C)

THIS DRAWING IS AN INSTRUMENT OF SERVICE BETWEEN THE ARCHITECT AND HIS CLIENT, BUT REMAINS THE PROPERTY OF THE ARCHITECT.
© ALL RIGHTS RESERVED 2007

planning/interior design
GARY GUY WILSON ARCHITECTS, PC
(702)876-0668
professional corp / certified n.c.a.r.b.
architecture/engineering/site
7625 Dean Martin Drive, Suite#100
Las Vegas, Nevada 89139

CONSULTANTS:
CIVIL: CIVILWORKS, INC. ELEC: SH NEVADA
STRUCTL: WRIGHT ENGINEERS MECH: SH NEVADA

CARL'S JR RESTAURANT
@ RUSSELL ROAD & EASTERN AVE.
McCARRAN MARKETPLACE
FOR: S.L. INVESTMENTS, MR. STEVE LARSON
CLARK COUNTY, NEVADA

PROJ.NO.	13520701.00
PROJ.ARCH.	G.G.WILSON,AIA
PROJ.MGR.	MVM
JOB CAPT.	MVM
TECH'N	VAN/EMD
ARCH.CHK	GGW
PH–2/3	02FEB07
PH–4	30MAR07
PH–5	02MAY07

REVISIONS
07-19993
Clark County Dev. Services
Building Services Division
AUG 06 2007
Reviewed and Accepted
Wilidan

PRINTS REQUIRE ARCHITECT'S SEAL & SIGN. FOR PROOF OF VALIDITY

GARY G. WILSON REGISTERED No. 5775 STATE OF NEVADA
APR 2 9 2007

REFRIGERATON PLAN, SCHEDULES & DETAILS

SHT.NO. K-2

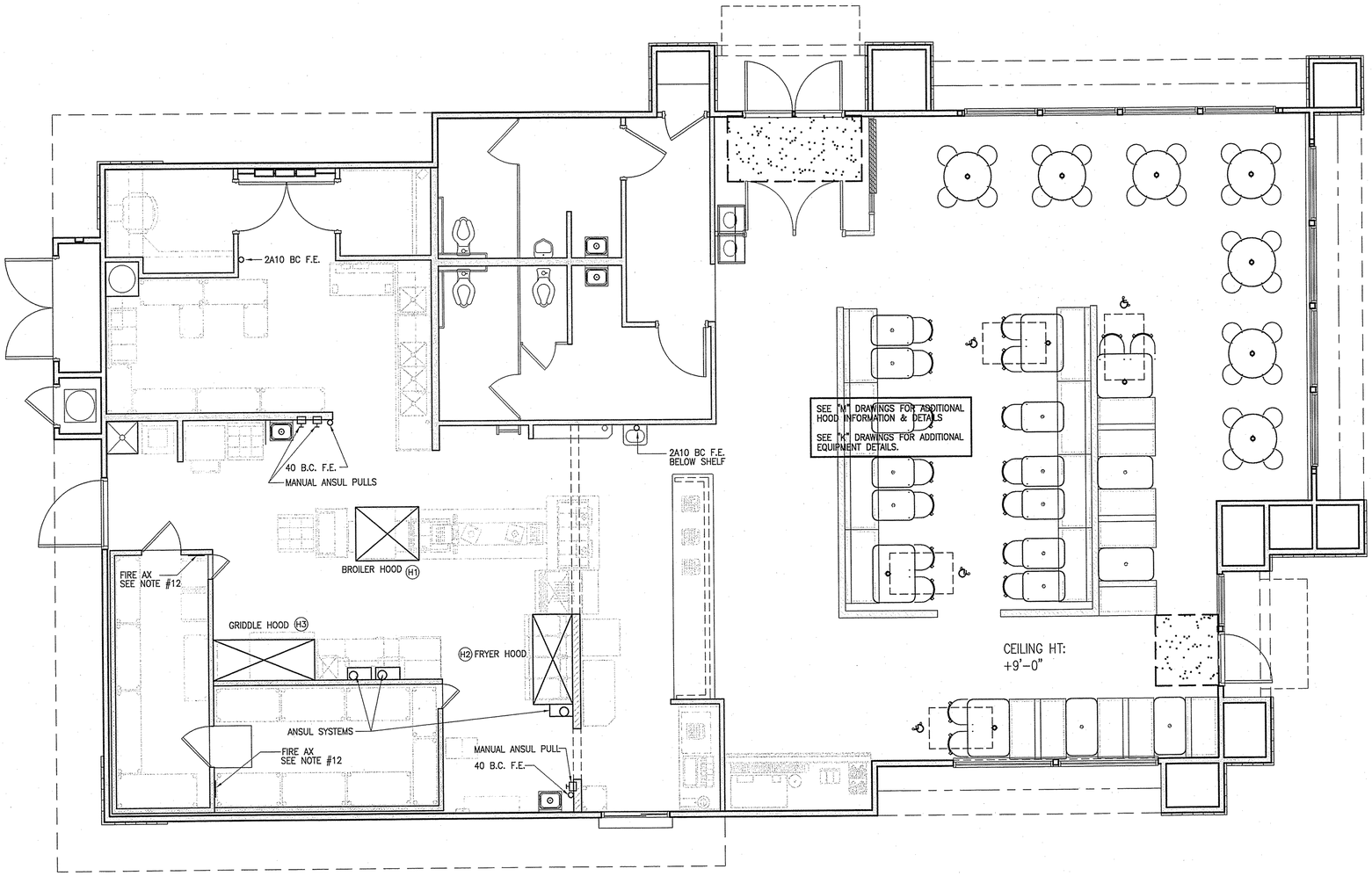

FIRE PROTECTION PLAN | SCALE: 1/4"=1'-0" | 7

FIRE PROTECTION NOTES

1. Fire Protection System: "Ansulex" liquid fire suppressant provide (3) Ansul R-102 liquid system per U.L. 300. providing duct, plenum, and full cooking appliance coverage.
2. Contractor to provide drawings for extinguishing system and shall be approved by Fire Dept. prior to installation.
3. Chemical extinguishing systems shall be installed per N.F.P.A. standard 96 to protect cooking equipment and exhaust system.
4. Provide and install fire extinguishers as indicated on plans. Type, location, and number to be approved by Fire Inspector.
5. Contractor shall schedule required test for final inspection and approval by Fire Inspector and/or governing agency.
6. For complete floor plan and equipment list see sheet K-1.
7. All manual pull tubing located on the roof shall be water tight, fastened and supported on 2x4 redwood blocking at 3'-0" o.c., set in roof mastic.
8. All tubing and piping penetrating roof shall be provided with roof jack (see "A" dwg.'s).
9. Electrician to provide 4/0 box with 1/2" KO's positioned with tabs in upper right and lower left of box for "ANSUL" manual pulls. Mount at 44" above finish floor. 1/2" EMT conduit to extend to above ceiling with no bends or offsets. Total of (3) boxes to be installed as located on sheet E-3 and K-1. See detail on sheet E-4.
10. The following items are parts and specs for each hood:

HOOD- H3

NOZZLE	PART#	TIP#	FLOW#		QTY
DUCT	56928	56923	2	X	1=2
PLENUM	56930	56926	1	X	1=1
GRIDDLE	418119	260	2	X	2=4

TOTAL FLOW PTS USED- 7
TOTAL FLOW PTS POSSIBLE- 11

NOZZLE HEIGHT FROM COOKING SURFACE- 10" TO 50"

HOOD- H1

NOZZLE	PART#	TIP#	FLOW#		QTY
DUCT	56928	56923	2	X	1=2
PLENUM	56930	56926	1	X	1=1
FRYER	418117	230	2	X	3=6

TOTAL FLOW PTS USED- 9
TOTAL FLOW PTS POSSIBLE- 11

NOZZLE HEIGHT FROM COOKING SURFACE- 25" TO 50"

HOOD- H2

NOZZLE	PART#	TIP#	FLOW#		QTY
DUCT	56928	56923	2	X	1=2
PLENUM	56930	56926	1	X	1=1
BROILER	56930	56926	1	X	2=2

TOTAL FLOW PTS USED- 5
TOTAL FLOW PTS POSSIBLE- 11

NOZZLE HEIGHT FROM COOKING SURFACE- 10" TO 26"

11. Additional items provided by fire protection contractor include the following:

2	FIRE EXTINGUISHER 2A10-BC	
2	FIRE EXTINGUISHER 40 BC	
3	REMOTE FULL STATIONS	4835
1	MECHANICAL GAS VALVE(1")	53743
1	MECHANICAL GAS VALVE (3/4")	54245
1	MECHANICAL GAS VALVE (1-1/2")	

12. Fire ax to be hung on side wall adjacent to door. Do not secure fire ax to inside of door.

NOTES | SCALE: NONE | 2

07-19983
Clark County Dev. Services
Building Services Division
AUG 06 2007 AL
Reviewed and Accepted
Wilidan

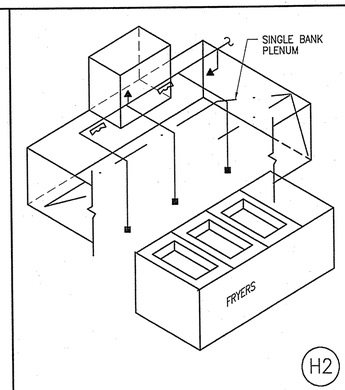

FRYER DETAIL | SCALE: 3"=1'-0" | 12

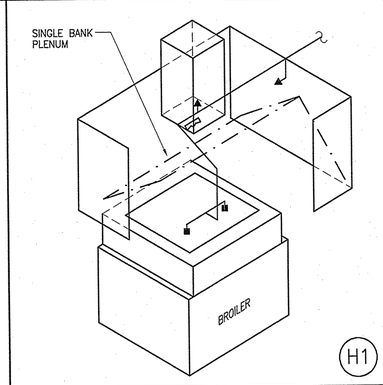

BROILER DETAIL | SCALE: 3"=1'-0" | 8

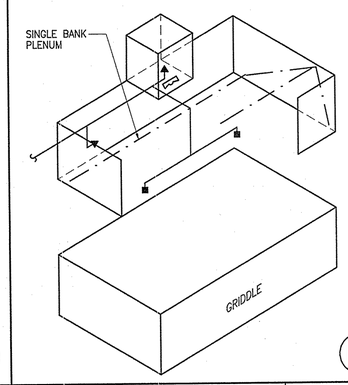

GRIDDLE DETAIL | SCALE: NONE | 4

THIS DRAWING IS AN INSTRUMENT OF SERVICE BETWEEN THE ARCHITECT AND HIS CLIENT, BUT REMAINS THE PROPERTY OF THE ARCHITECT.
(c) ALL RIGHTS RESERVED 2007

planning/interior design
GARY GUY WILSON ARCHITECTS, PC
(702)876-0668
professional corp / certified n.c.a.r.b.
architecture/engineering/site
7625 Dean Martin Drive, Suite#100
Las Vegas, Nevada 89139

CONSULTANTS:
CIVIL: CIVILWORKS, INC.
STRUCTL: WRIGHT ENGINEERS
ELEC: SH NEVADA
MECH: SH NEVADA

CARL'S JR. RESTAURANT
@ RUSSELL ROAD & EASTERN AVE.
McCARRAN MARKETPLACE

FOR: S.L. INVESTMENTS, MR. STEVE LARSON
CLARK COUNTY, NEVADA

PROJ.NO.	13520701.00
PROJ.ARCH.	G.G.WILSON,AIA
PROJ.MGR	MVM
JOB CAPT	MVM
TECH'N	VAN/EMD
ARCH.CHK	GGW
PH-2/3	02FEB07
PH-4	30MAR07
PH-5	02MAY07

REVISIONS

PRINTS REQUIRE ARCHITECT'S SEAL & SIGN. FOR PROOF OF VALIDITY

GARY G. WILSON REGISTERED No. 5 ARCHITECT NEVADA
APR 19 2007

FIRE PROTECTION PLAN & DETAILS

SHT.NO. K-3

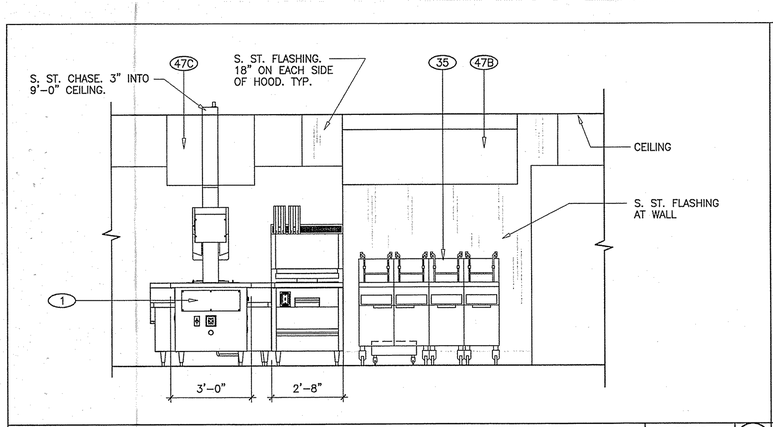

REAR ELEVATION – ITEM #1, #35, #61 & 47B | SCALE: 3/8"= 1'-0" | 16

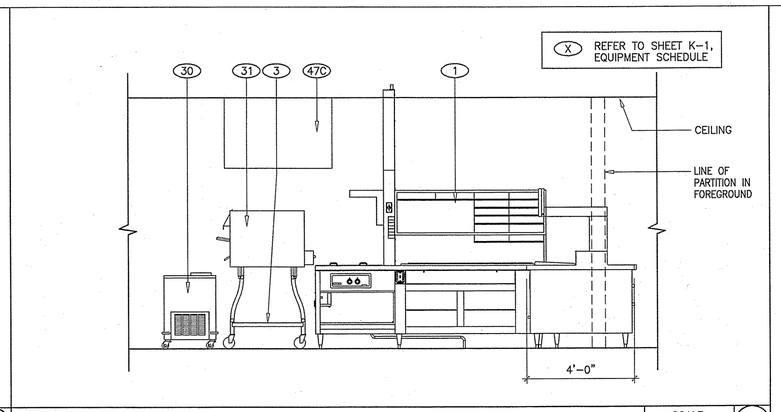

LEFT ELEVATION – ITEM #1 | SCALE: 3/8"= 1'-0" | 9

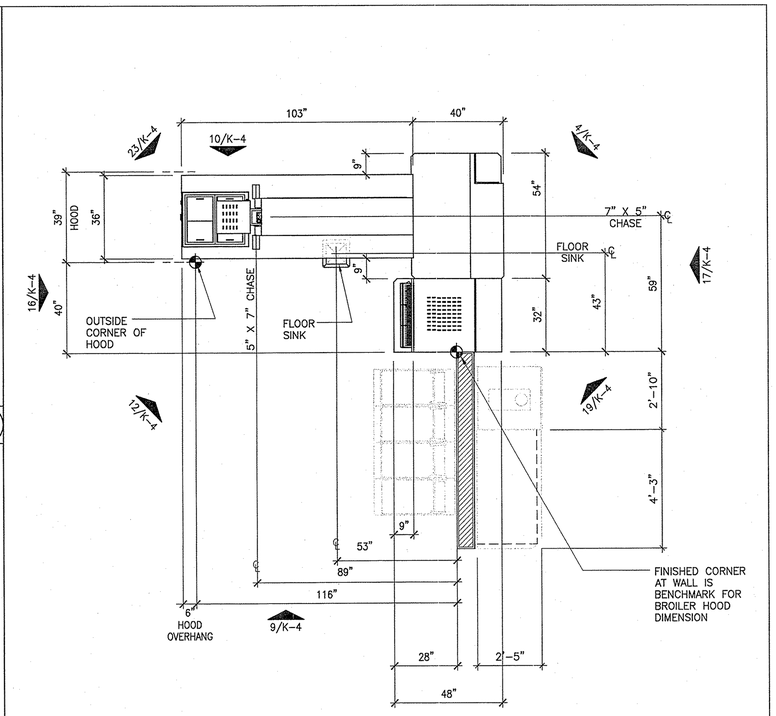

PLAN VIEW – ITEM #1 | SCALE: 3/8"= 1'-0" | 2

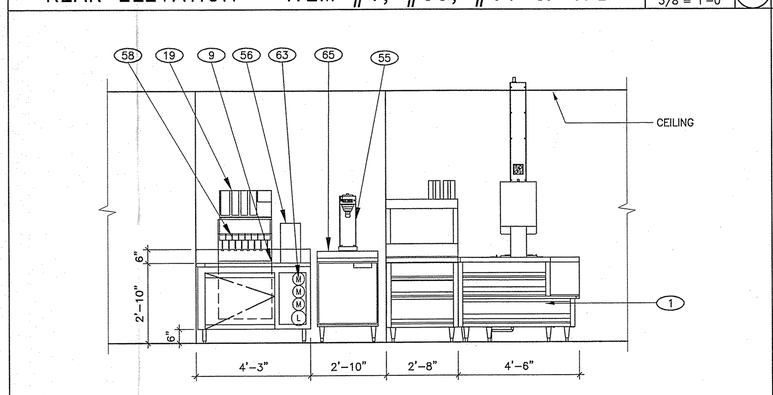

FRONT ELEVATION – ITEM #1 & #10 | SCALE: 3/8"= 1'-0" | 17

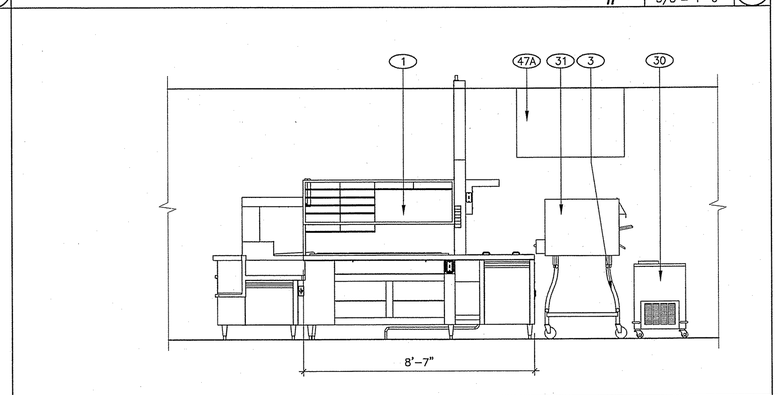

RIGHT ELEVATION – ITEM #1 | SCALE: 3/8"= 1'-0" | 10

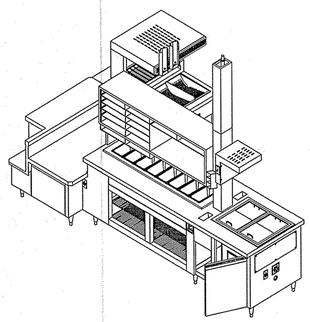

RIGHT REAR | SCALE: N.T.S. | 23

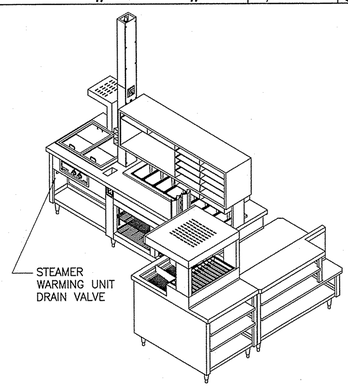

LEFT FRONT | SCALE: N.T.S. | 19

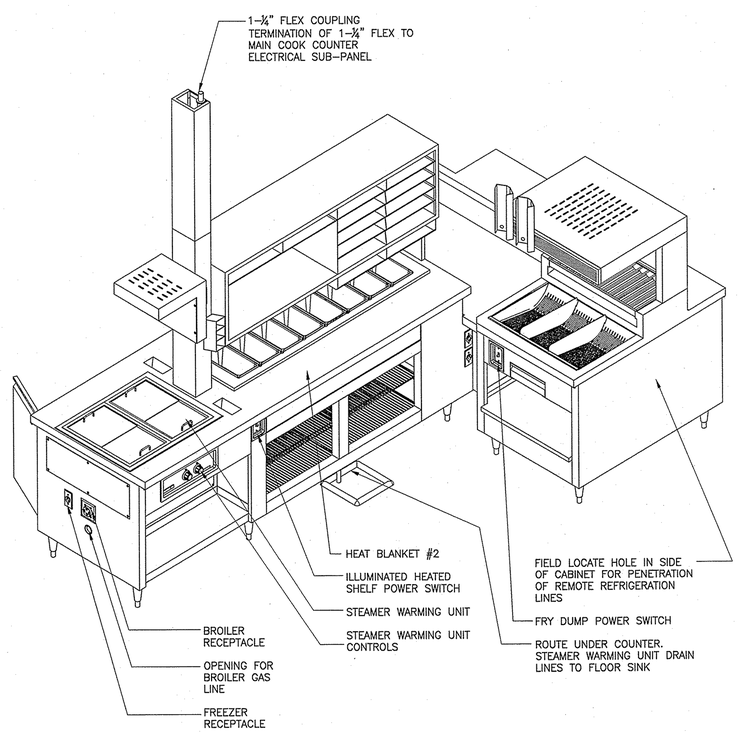

LEFT REAR | SCALE: N.T.S. | 12

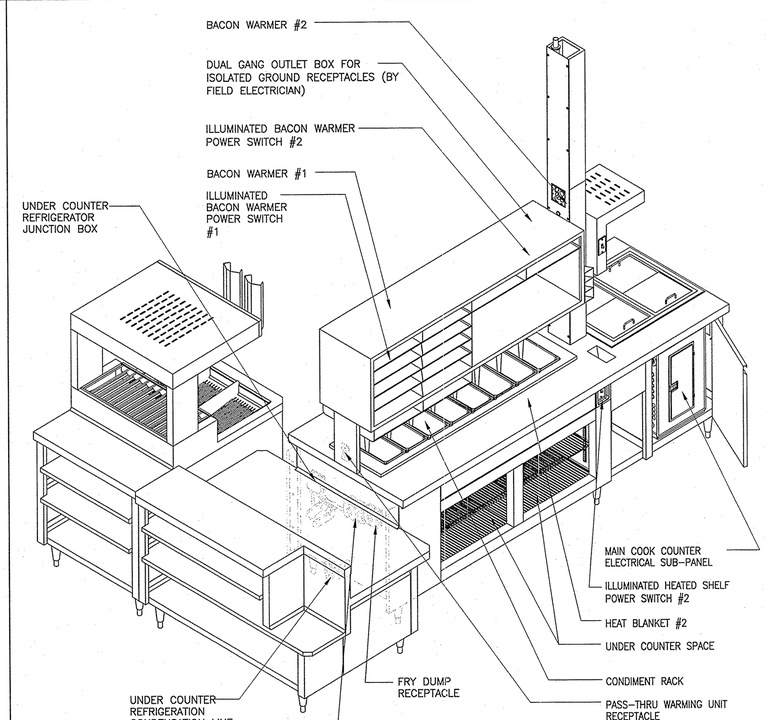

RIGHT FRONT (FRY DUMP & COUNTER NOT SHOWN) | SCALE: N.T.S. | 4

SCALE: -- | 24

SCALE: -- | 20

THIS DRAWING IS AN INSTRUMENT OF SERVICE BETWEEN THE ARCHITECT AND HIS CLIENT, BUT REMAINS THE PROPERTY OF THE ARCHITECT.
© ALL RIGHTS RESERVED 2007

planning/interior design
GARY GUY WILSON ARCHITECTS, PC
(702)876-0668
professional corp / certified n.c.a.r.b.
architecture/engineering/site
7625 Dean Martin Drive, Suite#100
Las Vegas, Nevada 89139

CONSULTANTS:
CIVIL- CIVILWORKS, INC. ELEC: SH NEVADA
STRUCTL: WRIGHT ENGINEERS MECH: SH NEVADA

CARL'S JR RESTAURANT
@ RUSSELL ROAD & EASTERN AVE.
McCARRAN MARKETPLACE
FOR: S.L. INVESTMENTS, MR. STEVE LARSON
CLARK COUNTY, NEVADA

PROJ.NO.	13520701.00
PROJ.ARCH.	G.G.WILSON,AIA
PROJ.MGR	MVM
JOB CAPT	MVM
TECH'N	VAN/EMD
ARCH.CHK	GGW
PH-2/3	02FEB07
PH-4	30MAR07
PH-5	02MAY07

REVISIONS
07-19993
Clark County Dev. Services
Building Services Division
AUG 06 2007 AL
Reviewed and Accepted
Wilidan

PRINTS REQUIRE ARCHITECT'S SEAL & SIGN. FOR PROOF OF VALIDITY

GARY G. WILSON
REGISTERED
No. 545
ARCHITECT
NEVADA
APR 19 2007

EQUIPMENT DETAILS

SHT.NO. K-4

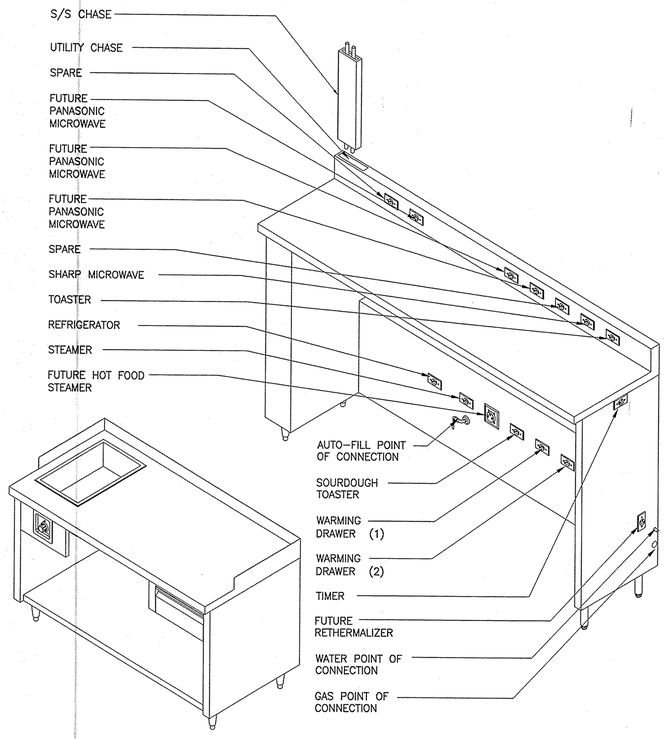

BACK COUNTER – RIGHT FRONT | SCALE: N.T.S. | 18

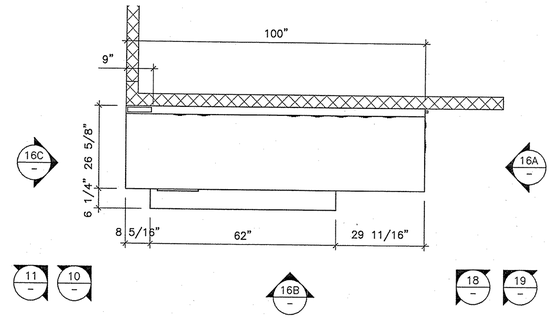

BACK COUNTER – ITEM #27 | SCALE: 1/2"=1'-0" | 9

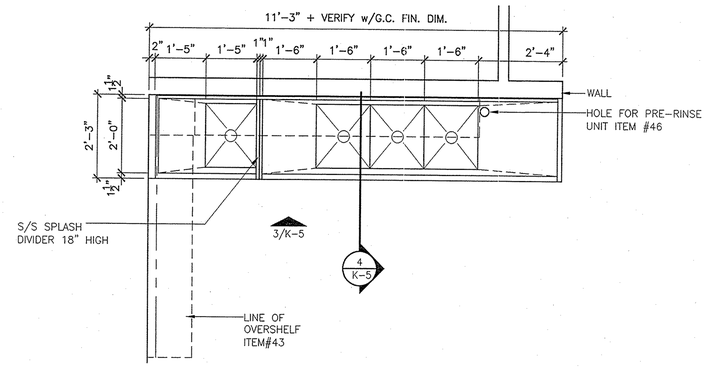

PLAN VIEW – POT SINKS/SHELF –ITEM #6 & 8 | SCALE: 1/2"=1'-0" | 1

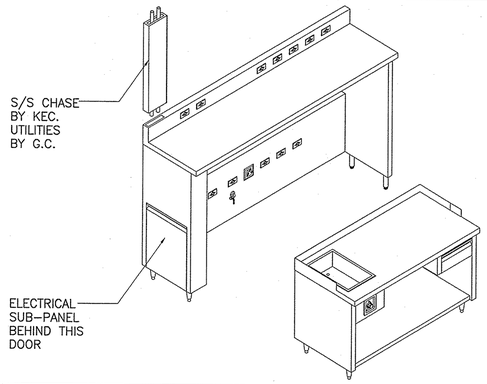

BACK COUNTER – LEFT FRONT | SCALE: N.T.S. | 10

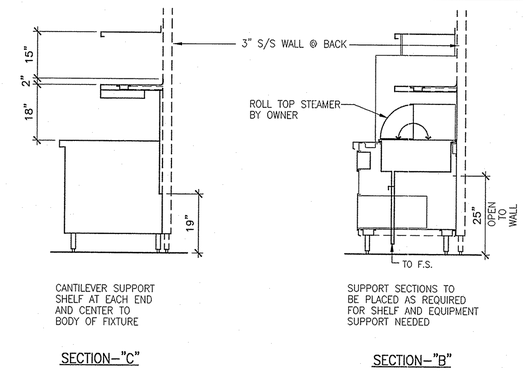

PREP COUNTER – SECTIONS | SCALE: 1/2"=1'-0" | 2

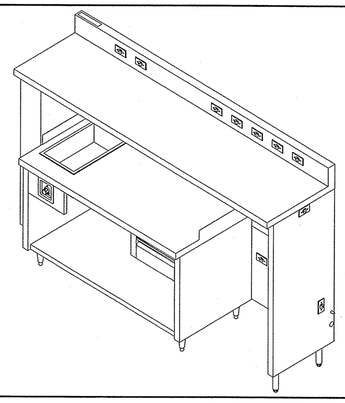

BACK COUNTER – RIGHT FRONT | SCALE: N.T.S. | 19

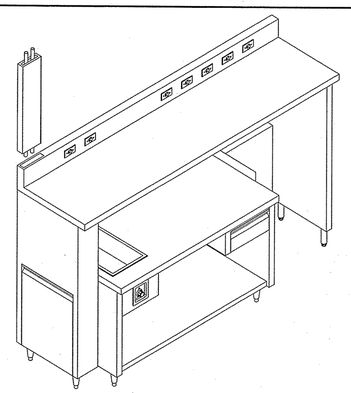

BACK COUNTER – LEFT FRONT | SCALE: N.T.S. | 11

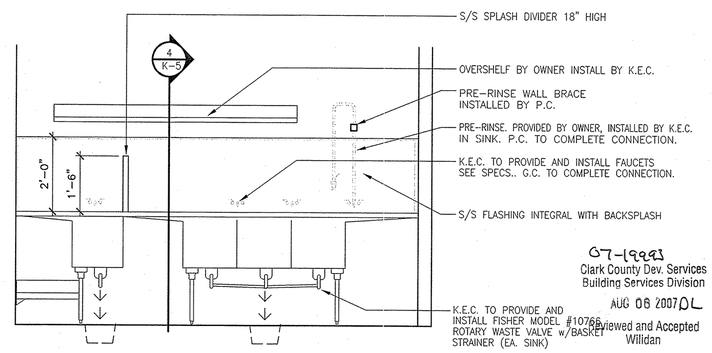

07-19993
Clark County Dev. Services
Building Services Division
AUG 06 2007 DL
Reviewed and Accepted
Willdan

FRONT VIEW – POT SINKS/SHELF – ITEM #6 & 8 | SCALE: 1/2"=1'-0" | 3

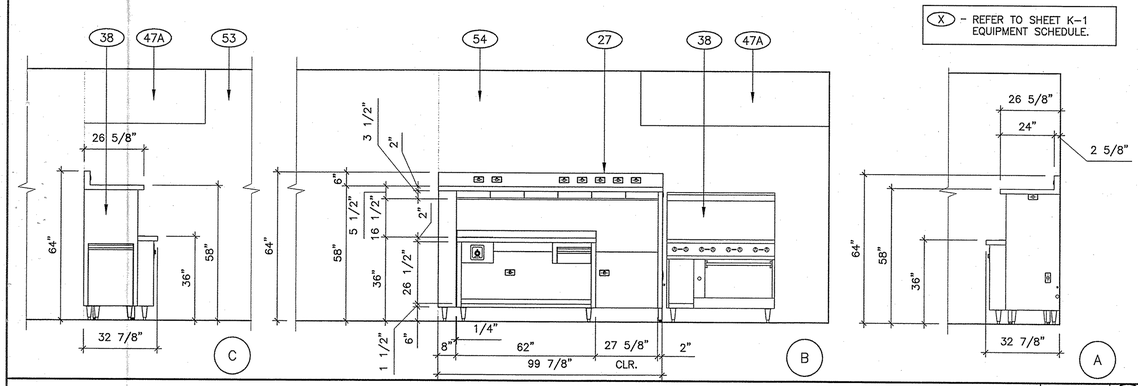

ELEVATIONS – ITEMS #27, #38 & #47A | SCALE: 3/8"=1'-0" | 16

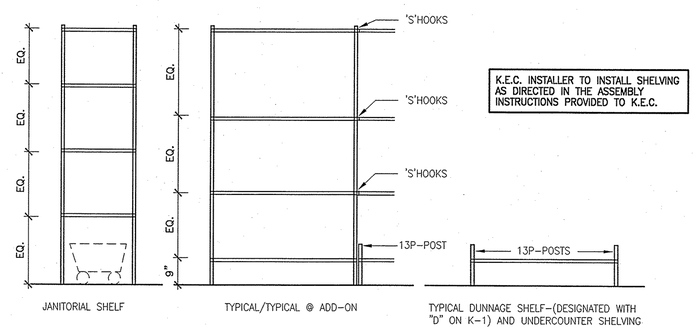

STORAGE SHELVING – TYPICAL ELEVATIONS | SCALE: 1/2"=1'-0" | 8

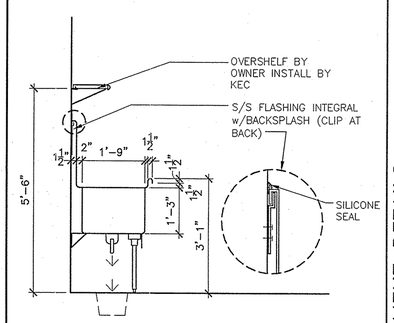

SECTION – POT SINK or VEG. SINK ITEM #6, 14 | SCALE: 3/4"=1'-0" | 4

THIS DRAWING IS AN INSTRUMENT OF SERVICE BETWEEN THE ARCHITECT AND HIS CLIENT, BUT REMAINS THE PROPERTY OF THE ARCHITECT.
© ALL RIGHTS RESERVED 2007

planning/interior design
GARY GUY WILSON ARCHITECTS, PC
7625 Dean Martin Drive, Suite#100
Las Vegas, Nevada 89139
(702)876-0668
professional corp / certified n.c.a.r.b.

architecture/engineering/site

CONSULTANTS:
CIVIL: CIVILWORKS, INC.
STRUCTL: WRIGHT ENGINEERS
ELEC: SH NEVADA
MECH: SH NEVADA

CARL'S JR RESTAURANT
© RUSSELL ROAD & EASTERN AVE.
McCARRAN MARKETPLACE
FOR: S.L. INVESTMENTS, MR. STEVE LARSON
CLARK COUNTY, NEVADA

PROJ.NO.	13520701.00
PROJ.ARCH.	G.G.WILSON,AIA
PROJ.MGR	MVM
JOB CAPT	MVM
TECH'N	VAN/EMD
ARCH.CHK	GGW
PH–2/3	02FEB07
PH–4	30MAR07
PH–5	02MAY07

REVISIONS
1 .....

PRINTS REQUIRE ARCHITECT'S SEAL & SIGN, FOR PROOF OF VALIDITY.

GARY G. WILSON REGISTERED No. 545 ARCHITECT STATE OF NEVADA

EQUIPMENT DETAILS

SHT.NO. K-5

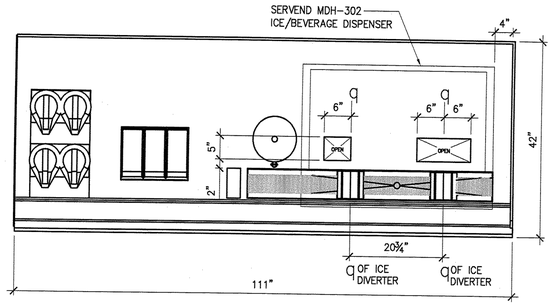

PLAN VIEW – DRINK STATION ITEM #12 | SCALE: NONE | 17

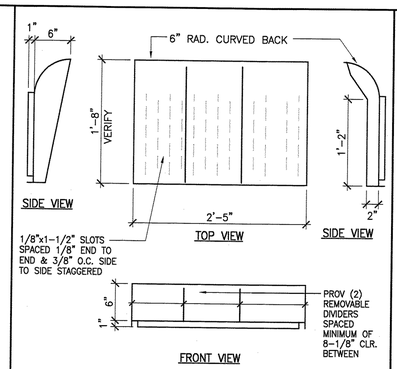

FRY DUMP BOTTOM | SCALE: 1"=1'-0" | 9

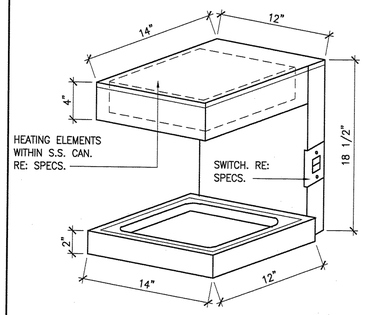

SEE SECTION BELOW FOR ADDITIONAL DETAIL

ONION RING / BACON WARMER | SCALE: NONE | 1

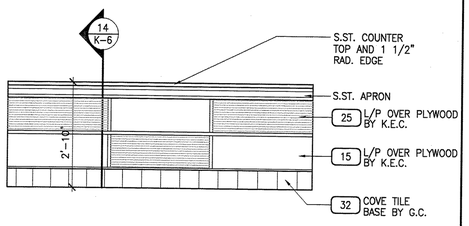

FRONT VIEW – DRINK STATION ITEM #12 | SCALE: 1/2"=1'-0" | 18

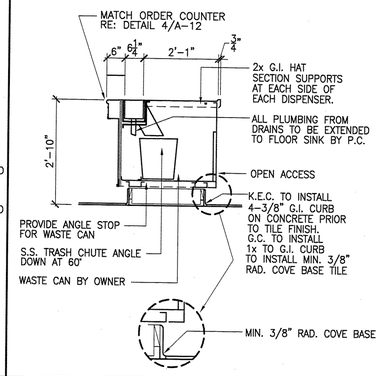

SECTION-ITEM #12 | SCALE: 1/2"=1'-0" | 14

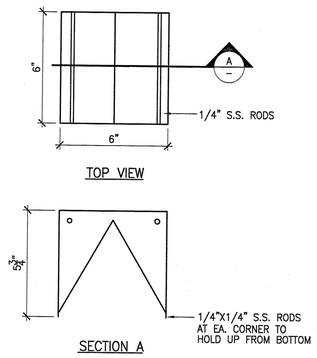

ICE DIVERTER | SCALE: NONE | 10

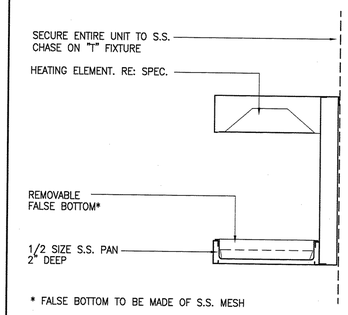

HEATER SECTION | SCALE: NONE | 2

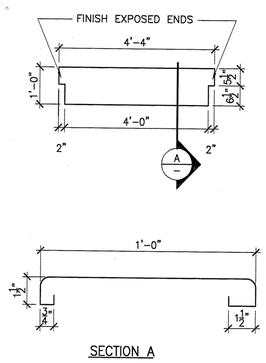

PASS-THRU-ITEM#13 | SCALE: 1/2"=1'-0" | 23

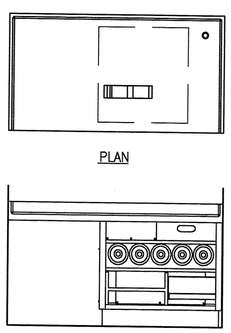

COUNTER-ITEM # 9 | SCALE: 1/2"=1'-0" | 15

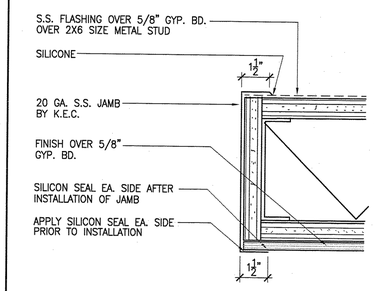

S/S WALL END CAP | SCALE: 3"=1'-0" | 3

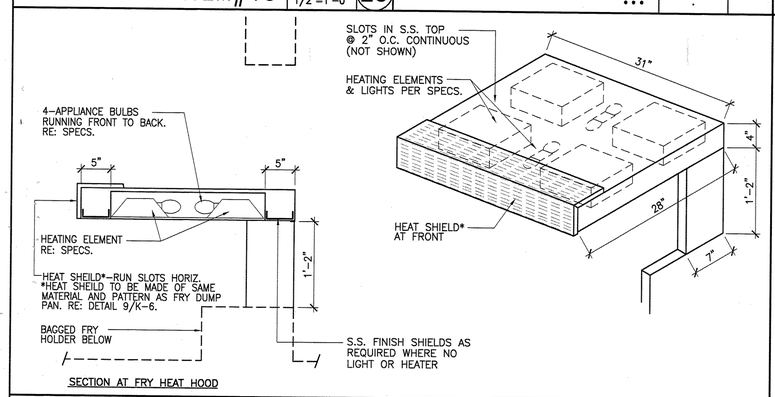

FRY DUMP HEATING HOOD | SCALE: NONE | 20

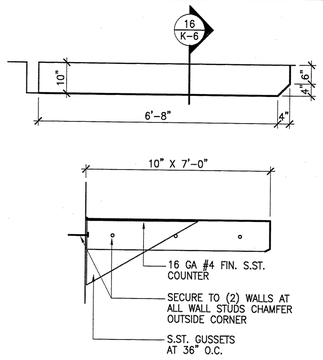

S/S SHELF-ITEM#10 | SCALE: NONE | 16

07-19993
Clark County Dev. Services
Building Services Division
AUG 06 2007 DL
Reviewed and Accepted
Willdan

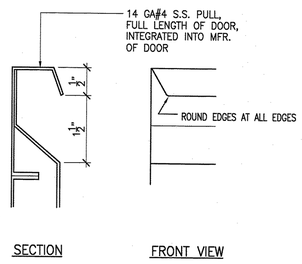

TYPICAL DOOR PULL | SCALE: NONE | 4

EQUIPMENT DETAILS

THIS DRAWING IS AN INSTRUMENT OF SERVICE BETWEEN THE ARCHITECT AND HIS CLIENT, BUT REMAINS THE PROPERTY OF THE ARCHITECT.
© ALL RIGHTS RESERVED 2007

GARY GUY WILSON ARCHITECTS, PC
architecture/engineering/site planning/interior design
7625 Dean Martin Drive, Suite #100
Las Vegas, Nevada 89139
(702)876-0668
professional corp / certified n.c.a.r.b.

CONSULTANTS:
CIVIL: CIVILWORKS, INC. ELEC: SH NEVADA
STRUCTL: WRIGHT ENGINEERS MECH: SH NEVADA

CARL'S JR RESTAURANT
@ RUSSELL ROAD & EASTERN AVE.
McCARRAN MARKETPLACE
FOR: S.L. INVESTMENTS, MR. STEVE LARSON
CLARK COUNTY, NEVADA

PROJ.NO.	13520701.00
PROJ.ARCH.	G.G.WILSON,AIA
PROJ.MGR	MVM
JOB CAPT	MVM
TECH'N	VAN/EMD
ARCH.CHK	GGW
PH-2/3	02FEB07
PH-4	30MAR07
PH-5	02MAY07

REVISIONS

PRINTS REQUIRE ARCHITECT'S SEAL & SIGN. FOR PROOF OF VALIDITY.

GARY G. WILSON REGISTERED No. 5449 STATE OF NEVADA ARCHITECT
APRIL 9 2007

SHT.NO. K-6

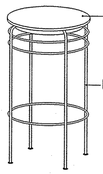

SEAT #1: EXPRESSIONS EX277 BLACK

FRAME: NEARLY CHROME

TESSA 260BS
BAR HEIGHT

CHAIR — SCALE: NONE — 13

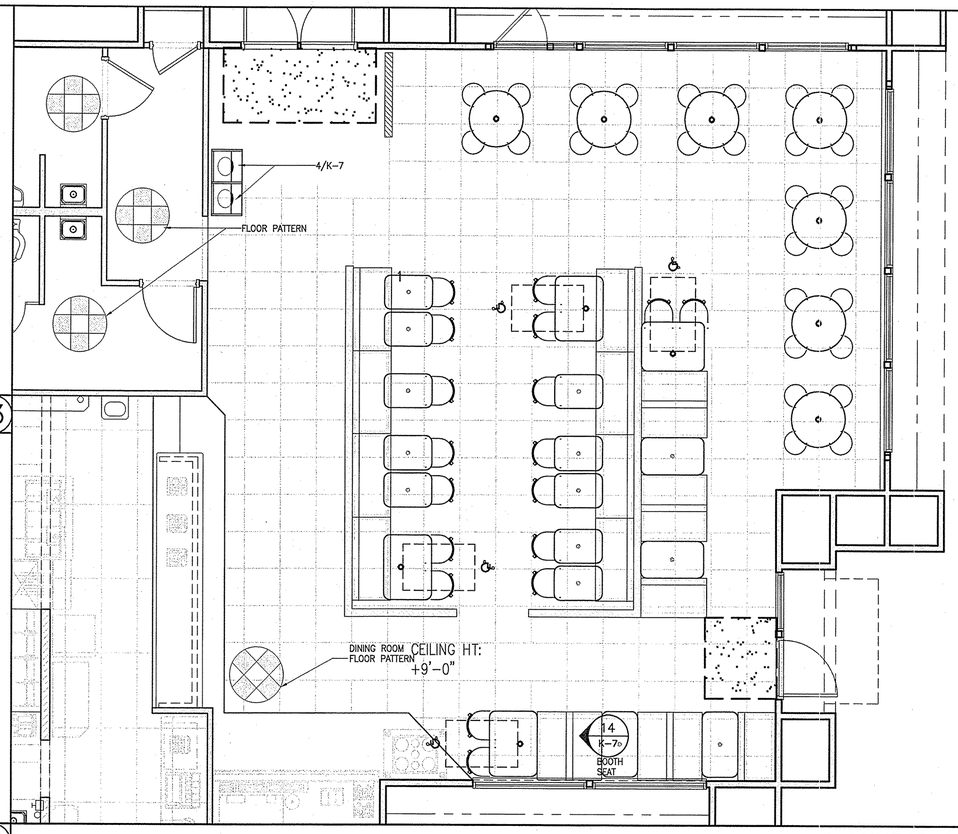

ALTERNATE: #1
ALL FIXED TABLES

- VERIFY TABLE TOP COLORS WITH S.C.
- VERIFY BOOTH TYPE TOP COLORS WITH S.C.

N

BULKHEAD LAYOUT — SCALE: 1/4"=-1'-0" — 2

NEW YORKER SETTEE BACK KEY

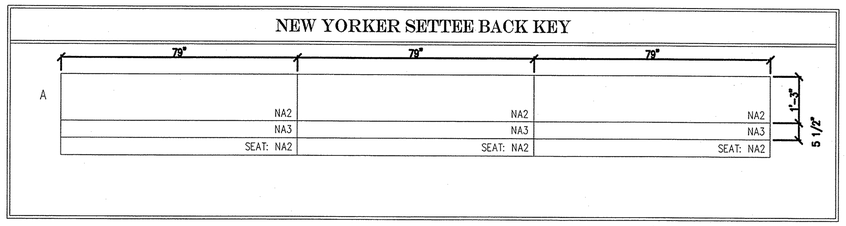

NEW YORKER SETTEE BACK KEY — SCALE: 1/2"= 1'-0" — 14

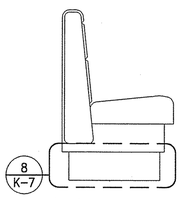

FULLY UPHOLSTERED

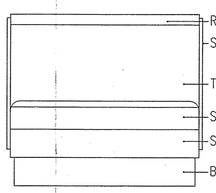

ROLLTOP / BACK PANEL: EXPRESSIONS EX258 PECAN
SIDE TRIM: EXPRESSIONS EX258 PECAN
TUFT: EXPRESSIONS EX277 BLACK
SEAT: EXPRESSIONS EX258 PECAN
SUPPORT: EXPRESSIONS EX277 BLACK
BASE FINISH: BLACK VINYL BASE

8
K-7

CAMBRIDGE BOOTH PATTERN TYPE #1
TYPE 1: STANDARD HT.

BOOTH — SCALE: 1/4"=-1'-0" — 15

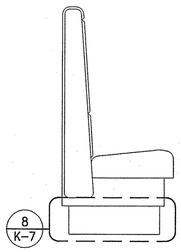

FULLY UPHOLSTERED

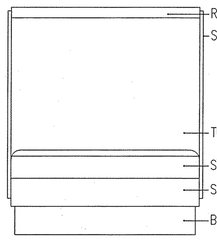

ROLLTOP / BACK PANEL: EXPRESSIONS EX258 PECAN
SIDE TRIM: EXPRESSIONS EX258 PECAN
TUFT: EXPRESSIONS EX277 BLACK
SEAT: EXPRESSIONS EX258 PECAN
SUPPORT: EXPRESSIONS EX277 BLACK
BASE FINISH: BLACK VINYL BASE

8
K-7

CAMBRIDGE BOOTH PATTERN TYPE #2
TYPE 2: CUSTOM HT 42"

BOOTH — SCALE: 1/4"=-1'-0" — 7

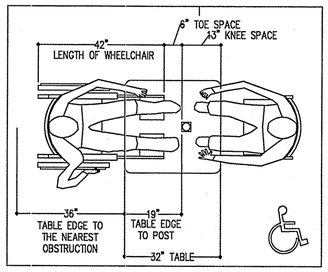

TYP. ACCESSIBLE INFO — SCALE: NONE — 3

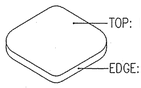

TOP: FORMICA, 839-58 STOP RED
EDGE: 3mm: BLACK

TYPE #1

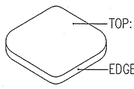

TOP: FORMICA, 689-58 STELLAR
EDGE: 3mm: BLACK

TYPE #2

TABLE TOP — SCALE: NONE — 20

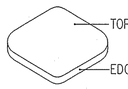

TOP: FORMICA, 3518-58 FLINT CRYSTAL
EDGE: 3mm: BLACK

TYPE #3

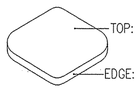

TOP: ARBORITE, 4-11-VL COPPERWOOD
EDGE: 3mm: BLACK

TYPE #4

TABLE TOP — SCALE: NONE — 16

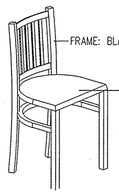

FRAME: BLACK WRINKLE
SEAT: MEDALLION ME-4 MANGANESE

LAFAYETTE CHAIR

CHAIR — SCALE: NONE — 12

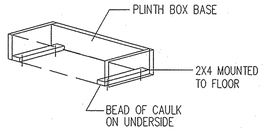

PLINTH BOX BASE
2X4 MOUNTED TO FLOOR
BEAD OF CAULK ON UNDERSIDE

BOOTH BOTTOM DESIGN

BOOTH BASE — SCALE: NONE — 8

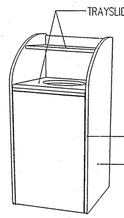

TRAYSLIDE: CORIAN, MIDNIGHT
EDGE: BLACK
UNIT: ARBORITE W-411-VL COPPERWOOD

DELTA

- VERIFY FINAL COLORS WITH S.C.

TRASH STANDS-ITEM #90 — SCALE: NONE — 4

07-19993
Clark County Dev. Services
Building Services Division
AUG 06 2007
Reviewed and Accepted
Wilidan

THIS DRAWING IS AN INSTRUMENT OF SERVICE BETWEEN THE ARCHITECT AND HIS CLIENT, BUT REMAINS THE PROPERTY OF THE ARCHITECT.
© ALL RIGHTS RESERVED 2007

architecture/engineering/site
GARY GUY WILSON
7625 Dean Martin Drive, Suite#100
Las Vegas, Nevada 89139
planning/interior design
ARCHITECTS, PC
(702)876-0668
professional corp / certified n.c.a.r.b.

CONSULTANTS:
CIVIL: CIVILWORKS, INC.
STRUCTL: WRIGHT ENGINEERS
ELEC: SH NEVADA
MECH: SH NEVADA

CARL'S JR RESTAURANT
@ RUSSELL ROAD & EASTERN AVE.
McCARRAN MARKETPLACE
FOR: S.L. INVESTMENTS, MR. STEVE LARSON
CLARK COUNTY, NEVADA

PROJ.NO.	13520701.00
PROJ.ARCH.	G.G.WILSON,AIA
PROJ.MGR	MVM
JOB CAPT	MVM
TECH'N	VAN/EMD
ARCH.CHK	GGW
PH-2/3	02FEB07
PH-4	30MAR07
PH-5	02MAY07

REVISIONS
1
2
3
4
5
6

PRINTS REQUIRE ARCHITECT'S SEAL & SIGN. FOR PROOF OF VALIDITY

GARY G. WILSON
REGISTERED
No. 545
ARCHITECT
STATE OF NEVADA
APR 19 2007

SEATING PLAN & DETAILS

SHT.NO. K-7

SCOPE OF WORK

(A)(B) NEW 42" HALO ILLUMINATED "STAR" LOGO CLOUD SIGN

(D)(E)(F) 24" HALO ILLUMINATED "CARL'S JR." CHANNEL LETTERS

(C) NEW 36" HALO ILLUMINATED "STAR" LOGO SIGN

(G) NEW 24" HALO ILLUMINATED "STAR" LOGO SIGN

(H) 18" HALO ILLUMINATED "CARL'S JR." CHANNEL LETTERS

(J)(K) NEW D/F ILLUMINATED DIRECTIONAL SIGN

OWNER PROVIDED ITEMS AND INSTALLED BY SIGN CONTRACTOR

(1) DRIVE-THRU PREVIEW BOARD

(2) ORDER CONFERENCE BOARD

(3) DRIVE-THRU MENU BOARD

(4) INTERIOR MENU BOARDS – SEE PLANS

NOTE: PROVIDE 110V/20A CIRCUITS TO EACH SIGN LOCATION

LEGEND — SCALE: 1"=50'-0" — (14)

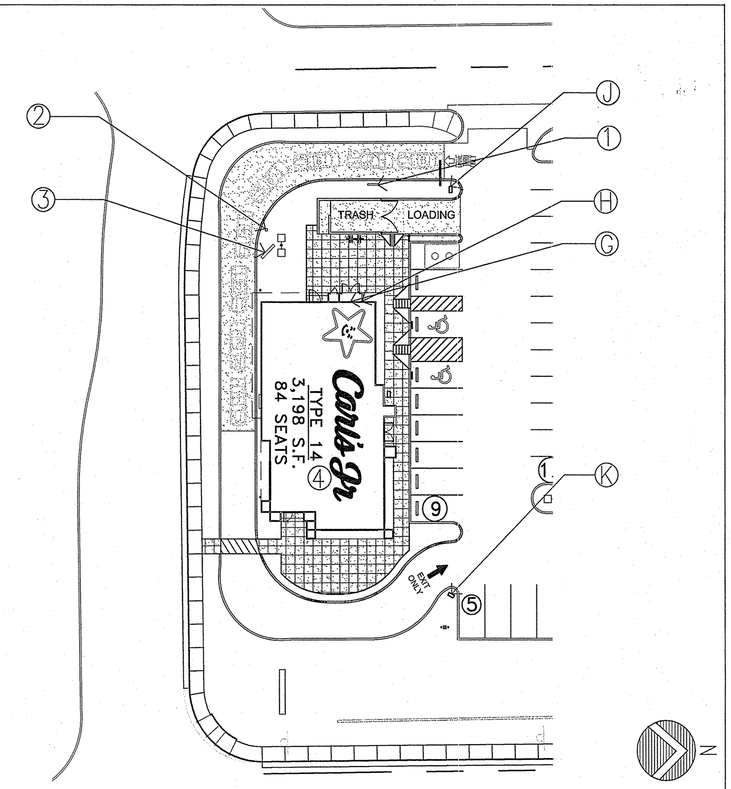

SIGNAGE SITE PLAN (FOR SIGN REFERENCE ONLY) — SCALE: 1"=25'-0" — (2)

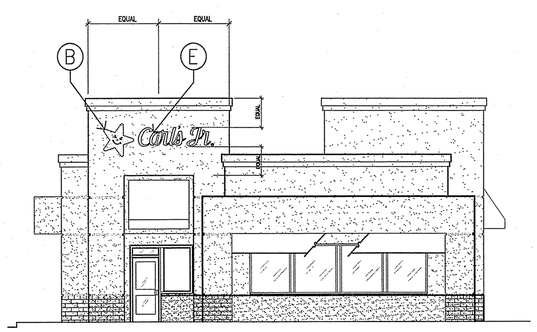

SECONDARY ENTRANCE (EAST) — SCALE: N.T.S. — (19)

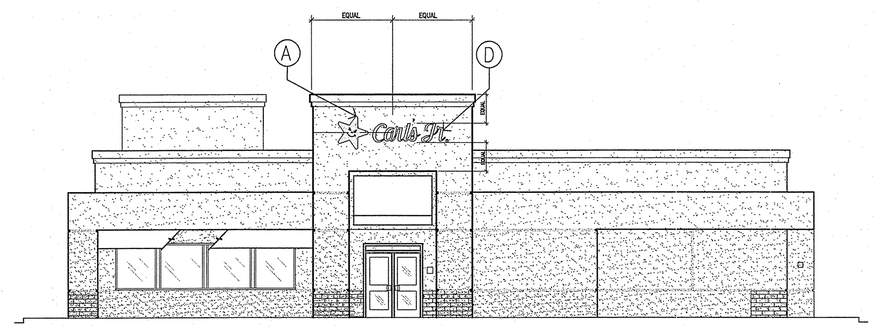

MAIN ELEVATION (NORTH) — SCALE: N.T.S. — (3)

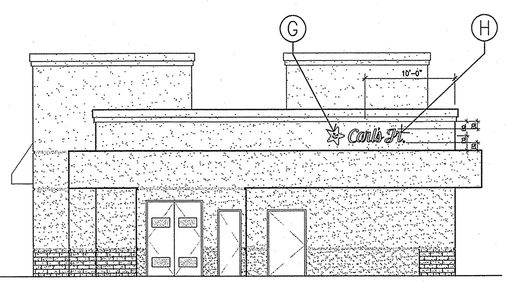

SERVICE ENRANCE ELEVATION (WEST) — SCALE: N.T.S. — (20)

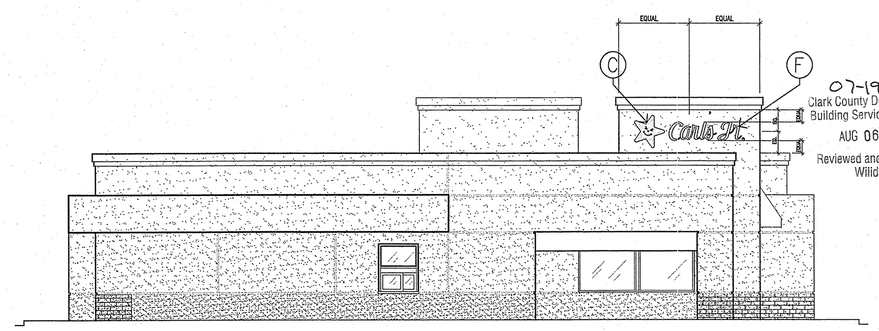

07-19993
Clark County Dev. Services
Building Services Division
AUG 06 2007 DL
Reviewed and Accepted
Wilidan

DRIVE THRU ELEVATION (SOUTH) — SCALE: N.T.S. — (4)

THIS DRAWING IS AN INSTRUMENT OF SERVICE BETWEEN THE ARCHITECT AND HIS CLIENT, BUT REMAINS THE PROPERTY OF THE ARCHITECT.
(c) ALL RIGHTS RESERVED 2006

architecture/engineering/site
GARY GUY WILSON
7625 Dean Martin Drive, Suite#100
Las Vegas, Nevada 89139

planning/interior design
ARCHITECTS,PC
(702)876-0668
professional corp / certified n.c.a.r.b.

CONSULTANTS:
CIVIL: CIVILWORKS, INC.
STRUCTL: WRIGHT ENGINEERS
ELEC: SH NEVADA
MECH: SH NEVADA

CARL'S JR RESTAURANT
@ RUSSELL ROAD & EASTERN AVE.
McCARREN MARKETPLACE
FOR: S.L. INVESTMENTS, MR. STEVE LARSON
CITY OF LAS VEGAS, NEVADA

PROJ.NO.	13520701.00
PROJ.ARCH.	G.G.WILSON,AIA
PROJ.MGR	MVM
JOB CAPT	MVM
TECH'N	EMD
ARCH.CHK	GGW
PH-2/3	02FEB07
PH-4	30MAR07
PH-5	02MAY07

REVISIONS

PRINTS REQUIRE ARCHITECT'S SEAL & SIGN. FOR PROOF OF VALIDITY.

GARY G. WILSON
REGISTERED
No. 545
ARCHITECT
STATE OF NEVADA
APR 19 2007

SHT.NO. SN-1

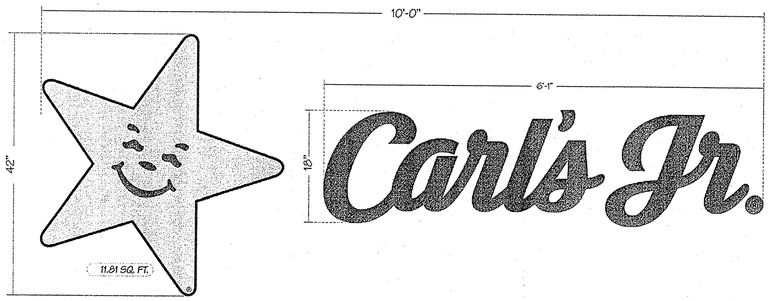

END VIEW

(C) (D) NEW 42" HALO ILLUM. "STAR" LOGO CLOUD SIGN

(E) (F) 18" HALO ILLUM. "CARL'S JR." CHANNEL LETTERS

Star Logo Specifications:

- FACE CONSTRUCTED OF .080 ALUMINUM PAINTED TO YELLOW PMS #109, WITH ROUTED OUT FEATURES AND BACKED UP WITH RED ACRYLIC # 278 AND BLACK VINYL BORDER APPLIED FIRST SURFACE.
- 5" DEEP RETAINERS CONSTRUCTED OF .063 ALUMINUM PAINTED TO MATCH CHERRY RED
- 3/16" CLEAR LEXAN BACKS
- TRADEMARK: TRANSLUCENT RED VINYL
- YELLOW LED HALO ILLUMINATION
- ALL COMPONENTS TO BE U.L. LISTED & APPROVED

PMS #109
BLACK
CHERRY RED

Channel Letter Specifications:

- FACE CONSTRUCTED OF .080 ALUMINUM PAINTED TO MATCH CHERRY RED
- 5" DEEP RETAINERS CONSTRUCTED OF .063 ALUMINUM PAINTED SHERWIN WILLIAMS "SILVERADO"
- 3/16" CLEAR LEXAN BACKS
- TRADEMARK: OPAQUE BLACK VINYL
- RED LED HALO ILLUMINATION
- ALL COMPONENTS TO BE U.L. LISTED & APPROVED

SILVERADO
BLACK
CHERRY RED

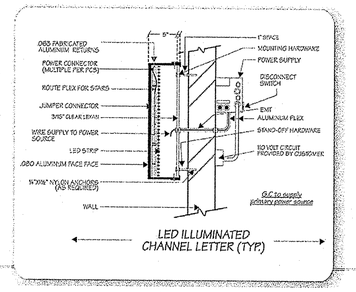

LED ILLUMINATED CHANNEL LETTER (TYP.)

42" HALO ILLUM. STAR & 18" HALO ILLUM. RED SCRIPT LED CHANNEL LETTERS

SCALE: 1" = 1'-0"

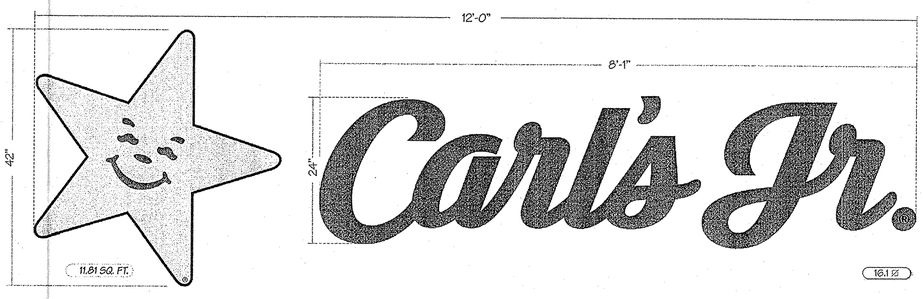

END VIEW

(A) NEW 42" HALO ILLUM. "STAR" LOGO CLOUD SIGN

(B) 24" HALO ILLUM. "CARL'S JR." CHANNEL LETTERS

Star Logo Specifications:

- FACE CONSTRUCTED OF .080 ALUMINUM PAINTED TO YELLOW PMS #109, WITH ROUTED OUT FEATURES AND BACKED UP WITH RED ACRYLIC # 278 AND BLACK VINYL BORDER APPLIED FIRST SURFACE.
- 5" DEEP RETAINERS CONSTRUCTED OF .063 ALUMINUM PAINTED TO MATCH CHERRY RED
- 3/16" CLEAR LEXAN BACKS
- TRADEMARK: TRANSLUCENT RED VINYL
- YELLOW LED HALO ILLUMINATION
- ALL COMPONENTS TO BE U.L. LISTED & APPROVED

PMS #109
BLACK
CHERRY RED

Channel Letter Specifications:

- FACE CONSTRUCTED OF .080 ALUMINUM PAINTED TO MATCH CHERRY RED
- 5" DEEP RETAINERS CONSTRUCTED OF .063 ALUMINUM PAINTED SHERWIN WILLIAMS "SILVERADO"
- 3/16" CLEAR LEXAN BACKS
- TRADEMARK: OPAQUE BLACK VINYL
- RED LED HALO ILLUMINATION
- ALL COMPONENTS TO BE U.L. LISTED & APPROVED

SILVERADO
BLACK
CHERRY RED

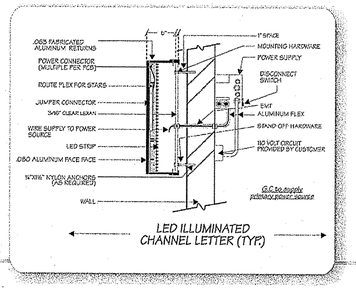

LED ILLUMINATED CHANNEL LETTER (TYP.)

42" HALO ILLUM. STAR & 24" HALO ILLUM. RED SCRIPT LED CHANNEL LETTERS

SCALE: 1" = 1'-0"

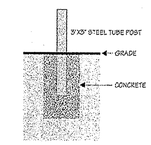

Specifications:

CABINETS:	FABRICATED ALUMINUM 9" DEEP, WITH 1½" RETAINERS TO BE PAINTED SHERWIN WILLIAMS SW 7076 "CYBERSPACE".
FACES:	WHITE PLEX/LEXAN WITH FIRST SURFACE APPLIED CUT/REVERSE CUT TRANSLUCENT VINYL GRAPHICS AS ILLUSTRATED.
POST:	3"X3" STEEL TUBE POST POWDER COATED FINISH TO MATCH "SILVERADO".
ILLUMINATION:	INTERNAL T12 CW/HO FLOURESCENT LAMPS
SWITCH:	TAMPER RESISTANT SWITCH: UL APPROVED 15A-120/277V "LEVITON" #1101-2L WITH KEYED WATERPROOF COVER.

PANTONE "CHERRY RED" / SW 6868 "TI SWEET RED"
YELLOW MONO, #2037 / SW 6908 "OG"
SILVERADO
SHERWIN WILLIAMS SW 7076 "CYBERSPACE"
BLACK
WHITE

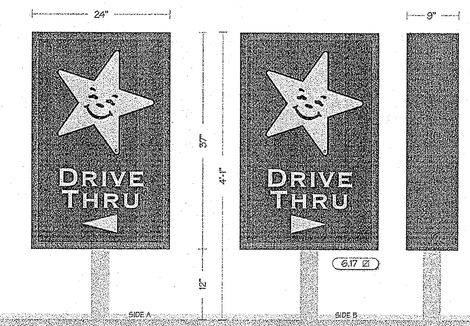

END VIEW

(G) NEW D/F ILLUM. "DRIVE THRU / DRIVE THRU" DIRECTIONAL SIGN

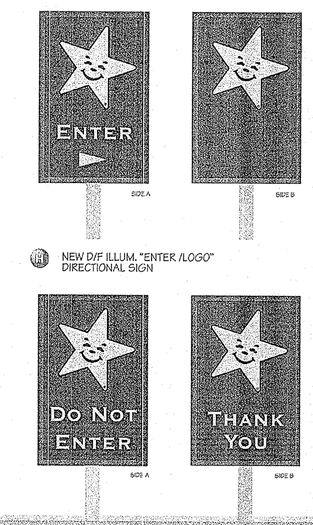

(H) NEW D/F ILLUM. "ENTER /LOGO" DIRECTIONAL SIGN

(I) NEW D/F ILLUM. "DO NOT ENTER / THANK YOU" DIRECTIONAL SIGN

CARL'S JR. - NEW D/F ILLUMINATED DIRECTIONAL SIGNS

SCALE: 1" = 1'-0"

FILE NAME:

THIS DRAWING IS AN INSTRUMENT OF SERVICE BETWEEN THE ARCHITECT AND HIS CLIENT, BUT REMAINS THE PROPERTY OF THE ARCHITECT.
© ALL RIGHTS RESERVED 2006

architecture/engineering/site
GARY GUY WILSON
7625 Dean Martin Drive, Suite #100
Las Vegas, Nevada 89139

planning/interior design
ARCHITECTS, PC
(702)876-0668
professional corp / certified n.c.a.r.b.

CONSULTANTS:
CIVIL: CIVILWORKS, INC. ELEC: SH NEVADA
STRUCTL: WRIGHT ENGINEERS MECH: SH NEVADA

CARL'S JR RESTAURANT
@ RUSSELL ROAD & EASTERN AVE.
McCARREN MARKETPLACE
FOR: S.L. INVESTMENTS, MR. STEVE LARSON
CITY OF LAS VEGAS, NEVADA

PROJ.NO.	13520701.00
PROJ.ARCH	G.G.WILSON,AIA
PROJ.MGR	MVM
JOB CAPT	MVM
TECH'N	EMD
ARCH.CHK	GGW
PH-2/3	02FEB07
PH-4	30MAR07
PH-5	02MAY07

REVISIONS
07-19993
Clark County Dev. Services
Building Services Division
AUG 06 2007
Reviewed and Accepted
Wilidan

PRINTS REQUIRE ARCHITECT'S SEAL & SIGN. FOR PROOF OF VALIDITY

GARY G. WILSON
REGISTERED
No. 545
ARCHITECT
NEVADA

APR 1 9 2007

SHT.NO. SN-2

Install Only

ORDER CONF. BOARD
(FOOTING ONLY)

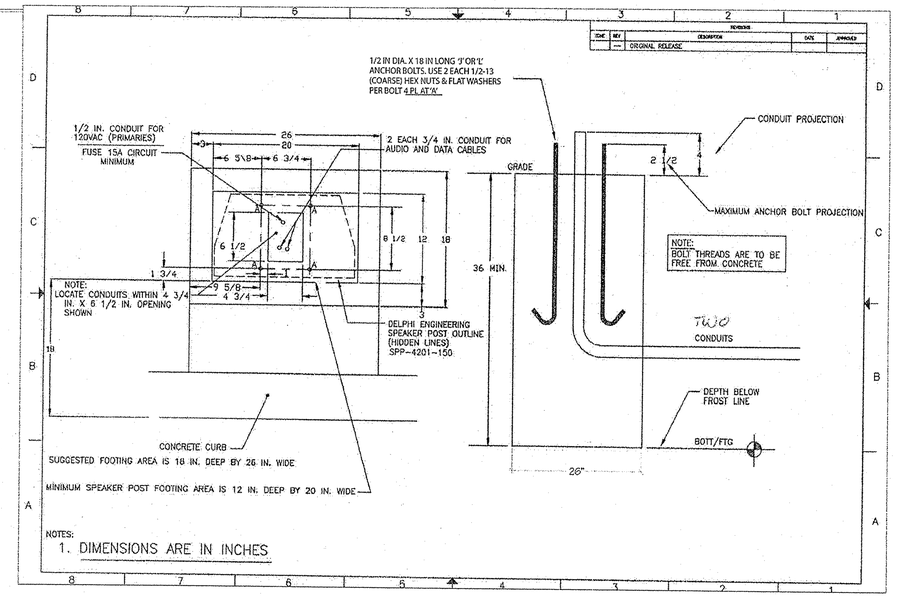

ORDER CONFIRMATION BOARD FOOTING DETAIL
SCALE: NTS

NOTE: ALL WORK TO COMPLY WITH 2001 CALIFORNIA ELECTRICAL CODE (CEC)

Install Only

DRIVE-THRU PREVIEW BOARD

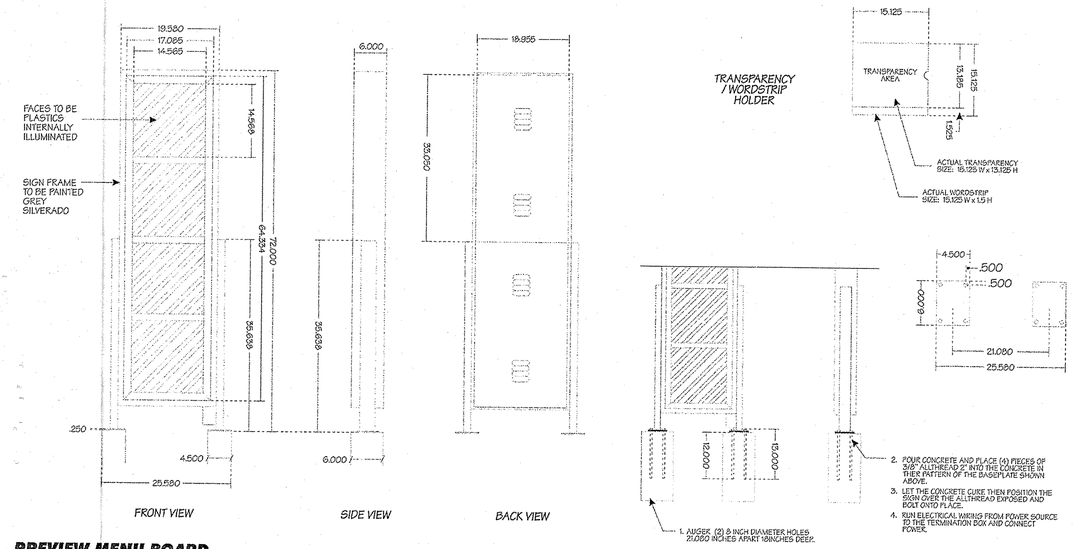

PREVIEW MENU BOARD
SCALE: NTS

Install Only

DRIVE-THRU MENU BOARD

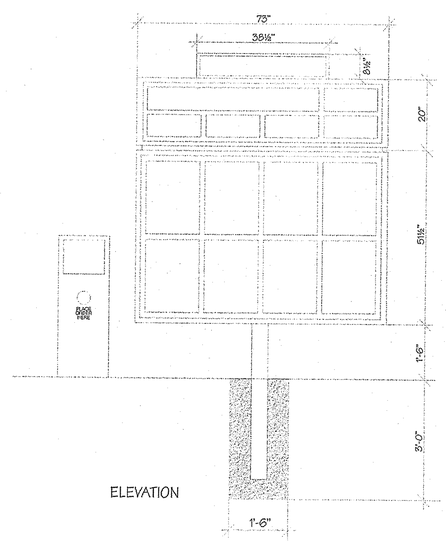

EXTERIOR MENU BOARD
SCALE: NTS

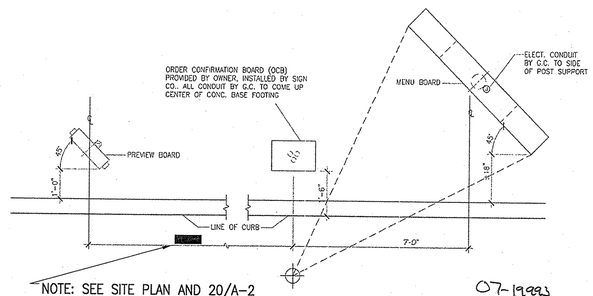

07-19993
Clark County Dev. Services
Building Services Division
AUG 06 2007
Reviewed and Accepted
Wilidan

MENU BOARD LAYOUT AT DRIVE THRU
SCALE: NTS

MENU BOARD SPECIFICATIONS

SINGLE FACED ILLUMINATED DRIVE-THRU MENU BOARD CABINET IS OF EXTRUDED ALUMINUM CONSTRUCTION WASHED AND PRIMED WITH ETCHING PRIMER AND PAINTED TO MATCH PMS COOL GRAY #4 U.N.O.

DOORS ARE TEMPERED GLASS PANELS WITH EXTRUDED ALUMINUM FRAMES MOUNTED ON PIANO HINGES. ALL DOORS TO LOCK WITH A UNIVERSAL KEY.

COPY PANELS ARE WHITE 1/8" ACRYLIC WITH PLASTIC "H" TRACK FOR 20 SLATS. COPY PANEL FRAME PAINTED DARK BLUE.

TRANSLITE PANELS ARE WHITE 1/8" ACRYLIC WITH 1/8" CLEAR OVERLAY. TRANSLITE PANEL FRAME PAINTED DARK BLUE.

FILE NAME:

THIS DRAWING IS AN INSTRUMENT OF SERVICE BETWEEN THE ARCHITECT AND HIS CLIENT, BUT REMAINS THE PROPERTY OF THE ARCHITECT.
© ALL RIGHTS RESERVED 2006

planning/interior design
GARY GUY WILSON ARCHITECTS, PC
(702)876-0668
professional corp / certified n.c.a.r.b.
architecture/engineering/site
GARY GUY WILSON
7625 Dean Martin Drive, Suite#100
Las Vegas, Nevada 89139
CONSULTANTS:
CIVIL: CIVILWORKS, INC. ELEC: SH NEVADA
STRUCTL: WRIGHT ENGINEERS MECH: SH NEVADA

CARL'S JR RESTAURANT
@ RUSSELL ROAD & EASTERN AVE.
McCARREN MARKETPLACE
FOR: S.L. INVESTMENTS, MR. STEVE LARSON
CITY OF LAS VEGAS, NEVADA

PROJ.NO.	13520701.00
PROJ.ARCH.	G.G.WILSON,AIA
PROJ.MGR	MVM
JOB CAPT	MVM
TECH'N	EMD
ARCH.CHK	GGW
PH-2/3	02FEB07
PH-4	30MAR07
PH-5	02MAY07

REVISIONS

PRINTS REQUIRE ARCHITECT'S SEAL & SIGN. FOR PROOF OF VALIDITY

GARY G. WILSON
REGISTERED
No. 345
ARCHITECT
STATE OF NEVADA
APR 19 2007

SHT.NO. SN-3

RECORDS SET

R/w/

COMM. LOG (3)

3RD SET

APPL # 07-19993

PROJECT NAME CARL'S JR.

CONTRACTOR NAME WCC CONSTRUC

JOB ADDRESS

TYPE OF WORK RESTAURANT

PHONE CONTACT: 876-0668

MAILING ADDRESS: 7625 DEAN MARTIN #100 89139

☑A ☑S ☑M ☑P ☑E

2000

Complete set

07-19993

Carls JR.

5755 So Eastern

RECORDS SET

RECORDS SET