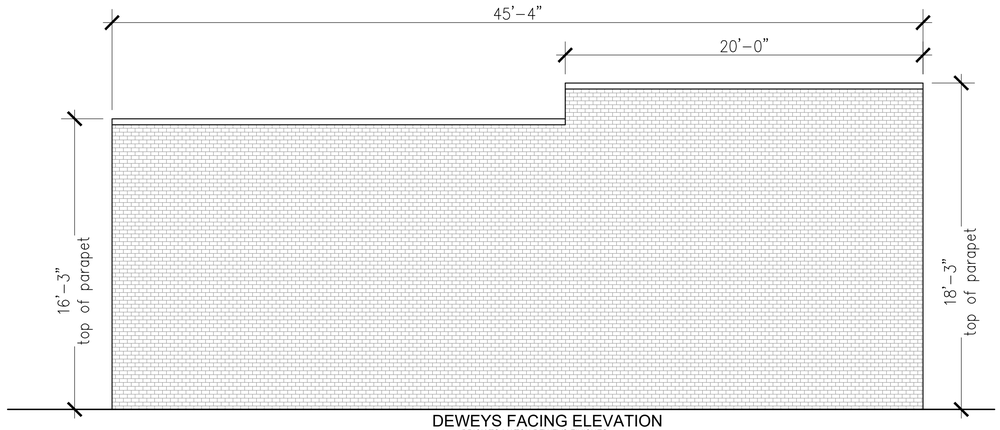

DEWEYS FACING ELEVATION
BRICK TO MATCH DEWEYS FINISHES

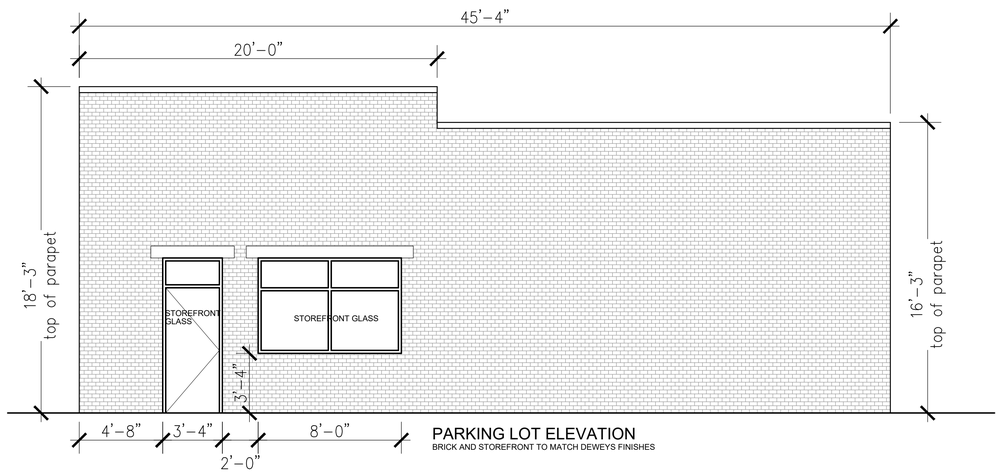

PARKING LOT ELEVATION
BRICK AND STOREFRONT TO MATCH DEWEYS FINISHES

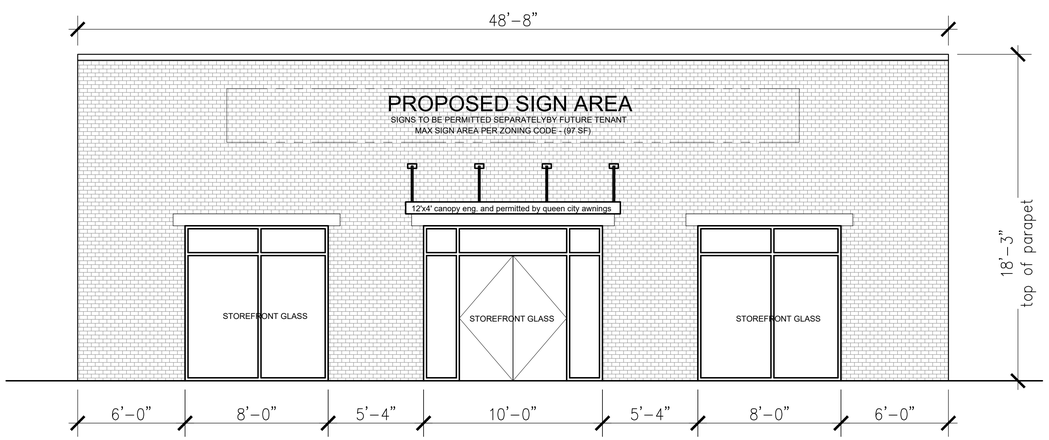

FRONT ENTRY ELEVATION
BRICK AND STOREFRONT TO MATCH DEWEYS FINISHES

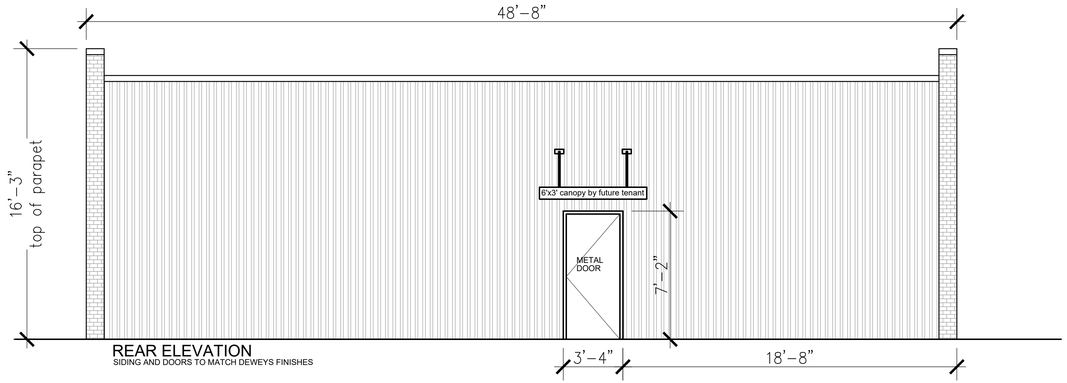
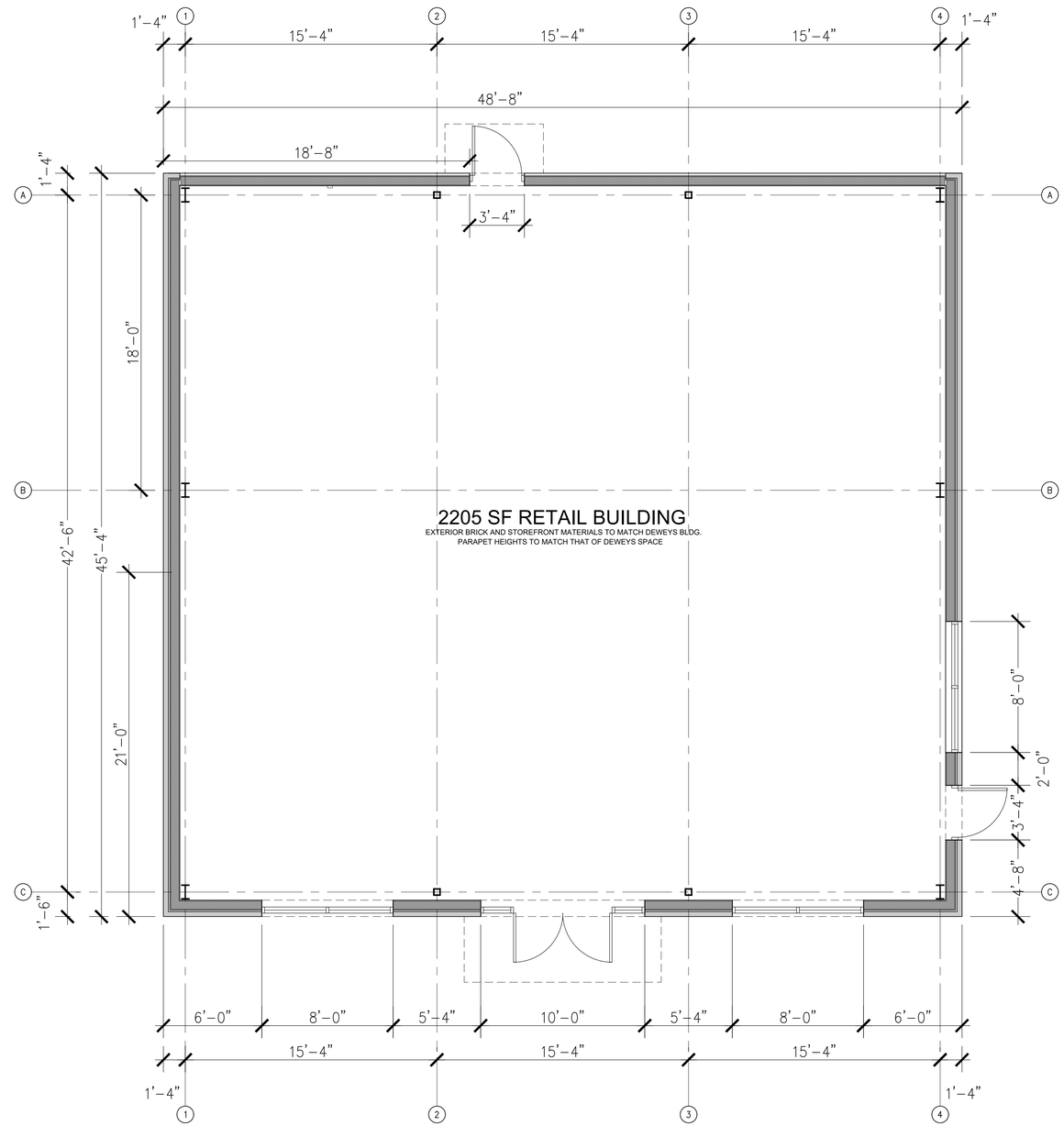
REAR ELEVATION
SIDING AND DOORS TO MATCH DEWEYS FINISHES