GARRISON CITY SPEECH

INTERIOR ALTERATIONS

51 WEBB PLACE, SUITE #310
DOVER, NH

ABBREVIATIONS

#	NUMBER
&	AND
@	AT
+/-	PLUS OR MINUS
AB	ANCHOR BOLT
ACT	ACOUSTIC TILE
AFF	ABOVE FINISH FLOOR
ALUM	ALUMINUM
APPROX	APPROXIMATE
BD	BOARD
BLDG	BUILDING
BLKG	BLOCKING
CH	CEILING HEIGHT
CJ	CONTROL JOINT
CLG	CEILING
CMU	CONCRETE MASONRY UNIT
CONC	CONCRETE
CONST	CONSTRUCTION
CONT	CONTINUOUS
DBL	DOUBLE
DIA	DIAMETER
DIM	DIMENSION
DN	DOWN
DWGS	DRAWINGS
EA	EACH
ELEV(S)	ELEVATION(S)
EL	ELEVATOR
ELECT	ELECTRICAL
EQ	EQUAL
ETC	ETCETERA
EXIST	EXISTING
EXPAN	EXPANSION
EXT	EXTERIOR
FFE	FINISH FLOOR ELEVATION
FBGL	FIBERGLASS
FIN	FINISH
FND	FOUNDATION
FT	FOOT/FEET
GALV	GALVANIZED
GWB	GYPSUM WALLBOARD
H	HIGH
HD	HAND
H.D.	HOT DIPPED
HDRM	HEADROOM
HM	HOLLOW METAL
HORIZ	HORIZONTAL
HP	HIGH POINT
HT	HEIGHT
HVAC	HEATING VENTILATING AND AIR CONDITIONING
IA	INTAKE AIR
INSUL	INSULATION
J	JAMB
JAN	JANITOR
LAM	LAMINATE
LAV	LAVATORY
LOC	LOCATION
LP	LOW POINT
MACH	MACHINE
MAS	MASONRY
MAX	MAXIMUM
MECH	MECHANICAL
MET	METAL
MISC	MISCELLANEOUS
MFR	MANUFACTURER
MIN	MINIMUM
MTG	MOUNTING
NO	NUMBER
NPS	NOMINAL PIPE SIZE
NIC	NOT IN CONTRACT
OC	ON CENTER
OPP	OPPOSITE
OH	OVERHEAD DOOR
PLAS	PLASTIC
PT	PRESSURE TREATED
RO	ROUGH OPENING
REQ'D	REQUIRED
RM	ROOM
S	SILL
SCH	SCHEDULE
SIM	SIMILAR
SP	SPACE
SQ	SQUARE
SS	STAINLESS STEEL
SPEC	SPECIFICATIONS
STL	STEEL
TO	TOP OF
TOM	TOP OF MASONRY
TOS	TOP OF STEEL
TYP	TYPICAL
UL	UNDERWRITERS LABORATORY
UH	UNIT HEATER
UTIL	UTILITY
VB	VAPOR BARRIER
VIF	VERIFY IN FIELD
W/	WITH
WH	WINDOW HEAD
WJ	WINDOW JAMB
WP	WORK POINT
WS	WINDOW SILL
WWF	WELDED WIRE FABRIC

CODE DATA

CODE DATA:

USE GROUP:	BUSINESS GROUP B
TYPE OF CONSTRUCTION:	III-B
NUMBER OF STORIES:	3
AUTO. SPRINKLER SYSTEM:	YES
ALTERED FLOOR AREA:	2,334 G.SF (THIRD FLOOR TENANT SPACE)
SCOPE OF WORK NARRATIVE:	ALTERATION LEVEL 2 (INTERIOR TENANT FIT-OUT) OF EXISTING COMMERCIAL BUILDING TENANT SPACE FOR BUSINESS GROUP B ON THIRD FLOOR

THESE DRAWINGS ARE IN CONFORMANCE WITH THE FOLLOWING:
- 2015 INTERNATIONAL BUILDING CODE WITH NH AMENDMENTS
- 2015 INTERNATIONAL EXISTING BUILDING CODE
- 2015 INTERNATIONAL ENERGY CONSERVATION CODE
- 2009 ANSI A117.1
- 2015 NFPA 101 LIFE SAFETY CODE
- RSA 155-A NEW HAMPSHIRE BUILDING CODE

USE GROUP CLASSIFICATION:

2015 IBC - CH. 10	BUSINESS GROUP B
2015 NFPA 101	NEW BUSINESS

2015 IBC CH. 10: MEANS OF EGRESS

EXIT ACCESS TRAVEL DIST.	MAXIMUM TRAVEL DISTANCE TO EXITS PERMITTED:			300 FT
	ACTUAL TRAVEL DISTANCE:			185 FT
	COMMON PATH EGRESS TRAVEL PERMITTED:			100 FT
	ACTUAL COMMON PATH EGRESS TRAVEL:			30FT
ALLOWABLE OCCUPANT LOAD	GROUND FLOOR:			
	BUSINESS AREAS (100 GSF / OCCUPANT)	2,334 SF / 100	=	24 PERSONS
	TOTAL OCCUPANT LOAD:			24 PERSONS
EGRESS WIDTH	EGRESS COMPONENTS: (.2" / OCCUPANT)	24 x .2" = 4.8" (36" MIN.)		
NO. OF EXITS		OCC. LOAD	REQ. EXITS	EXITS PROVIDED
	OCCUPANT LOAD AND REQUIRED EXITS:	<50	1	
	ACTUAL OCCUPANT LOAD AND EXITS:	24	1	2

ACCESSIBILITY:

THIS ALTERATION AND ADDITION HAS BEEN DESIGNED TO BE ACCESSIBLE IN ACCORDANCE WITH 2015 IBC CH. 11, 521 CMR, AND TITLE III OF THE AMERICANS WITH DISABILITIES ACT.

CONTRACTORS SHALL CONFORM TO ALL CODES, ORDINANCES, ETC. AND RETAIN RESPONSIBILITY FOR JURISDICTION OVER THE WORK. ALL WORK SHALL COMPLY WITH LATEST REVISIONS OF APPLICABLE CODES AND ORDINANCES

GENERAL NOTES

1. It is the responsibility of all Contractors to carefully examine all Drawings, Specifications and job conditions in order to coordinate their work with that of the other trades, through the General Contractor's Superintendent on the job, so as to avoid conflict in the placing of materials and equipment by the trades in the spaces shown.
2. Patch and match all existing materials that are damaged, disturbed, or left unfinished caused by any process of the construction under this contract.
3. Contractors to verify all dimensions and conditions in the field prior to commencing work under this contract.
4. Provide sealant at all joints of dissimilar materials.
5. All existing items that are removed and which are salvageable are the property of the Owner and are to be turned over to the Owner. Any items not wanted by the Owner are to be removed from the site by the General Contractor.
6. Furnish and install all temporary fences as required to protect the public, existing building, and new work.
7. All work is to be performed in accordance with all applicable State, Local, and National Codes, and OSHA requirements.
8. Wherever walls are to be painted it shall include all doors and frames, trim, piping, etc., that are part of, or attached to the walls. In areas of patched walls, walls shall be painted from floor to ceiling and to the nearest corner. There shall be no "patch painting".
9. Compliance with mechanical, electrical, plumbing and fire protection code to be the responsibility of the contractor.

SYMBOLS

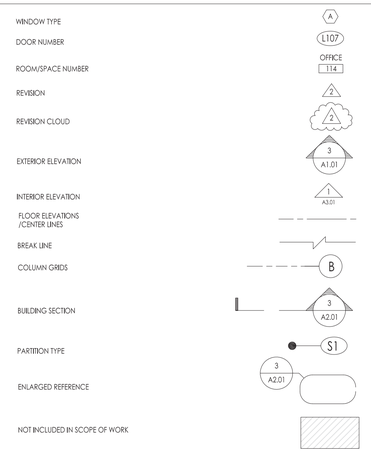

LOCATION MAP

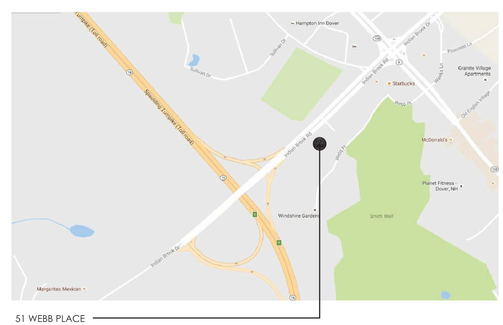

51 WEBB PLACE
UNIT 310
DOVER, NH

DRAWING LIST

COVER
A0.1 PROJECT INFORMATION
A0.2 ACCESSIBILITY DETAILS

ARCHITECTURAL
A1.1 UNIT FLOOR PLAN & WALL TYPES
A1.1A UNIT REFLECTED CEILING PLAN & SOFFIT DETAILS
A6.1 SCHEDULES, DOOR & FRAME TYPES, INTERIOR ELEVATIONS & DETAILS
F1.1 FINISH FLOOR PLAN & FINISH SCHEDULE

AS-BUILT DRAWING

CARENO CONSTRUCTION CO.

Architectural
PORTONE ARCHITECTS
959 Islington Street
Portsmouth, NH 03801
603.436.8891
info@portonearchitects.com
COPYWRIGHT © 2022 BY PORTONE ARCHITECTS, INC.
NO RELEASE WITHOUT PERMISSION

Structural

Fire Protection

Plumbing

HVAC

Electrical

Seal
LICENSED ARCHITECT WILLIAM DAVIS No. 1579 THE STATE OF NEW HAMPSHIRE

Rev. No.	Description	Date

Project
GARRISON CITY SPEECH
SUITE #310
INTERIOR FIT-UP
51 WEBB PLACE
DOVER, NH

Phase
PERMIT DOCUMENTS

Project No.

Date
AUG 24, 2022

Scale
As Noted

Drawn By: EM
Reviewed By: WD

Sheet Contents
PROJECT INFORMATION

Sheet No.
A0.1

TURNING SPACES

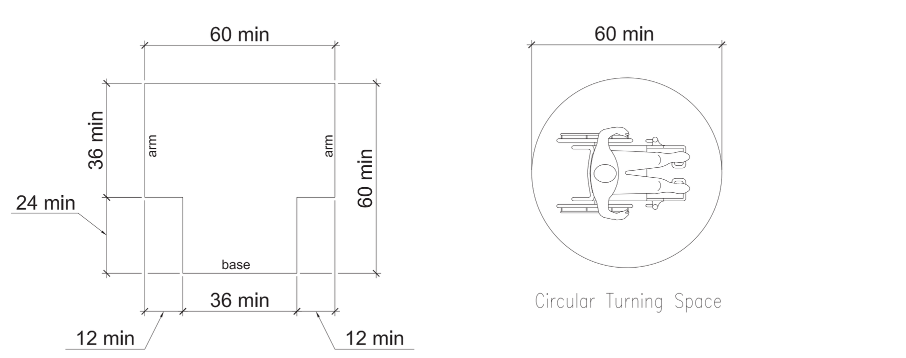

T-Shaped Turning Space

Circular Turning Space

CLEAR FLOOR SPACE

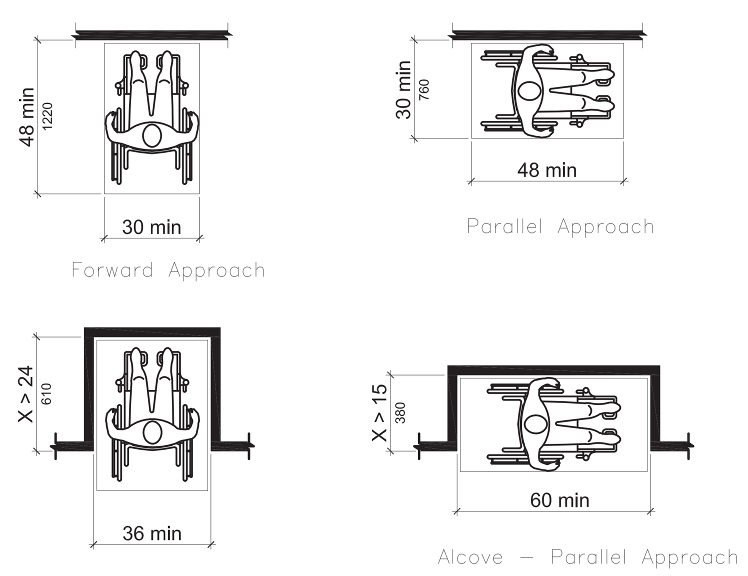

Forward Approach

Parallel Approach

Alcove – Forward Approach

Alcove – Parallel Approach

KNEE AND TOE CLEARANCE

Toe Clearance

Knee Clearance

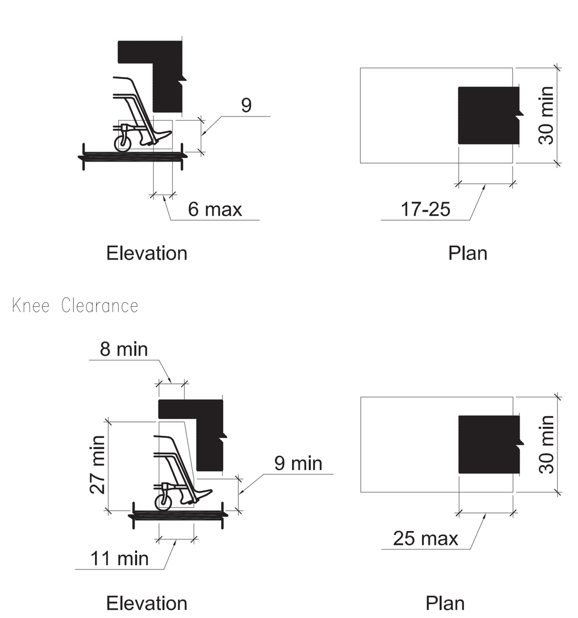

REACH RANGES

Forward Reach

Side Reach

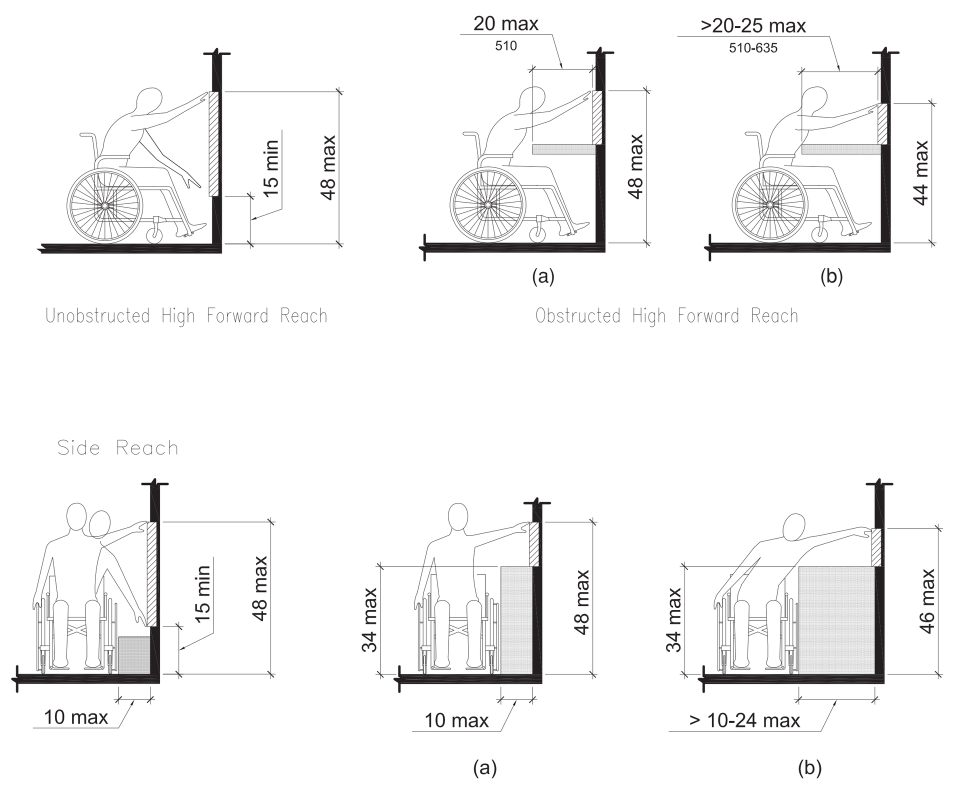

Unobstructed High Forward Reach

Obstructed High Forward Reach

Unobstructed Side Reach

Obstructed High Side Reach

ACCESSIBLE ROUTES

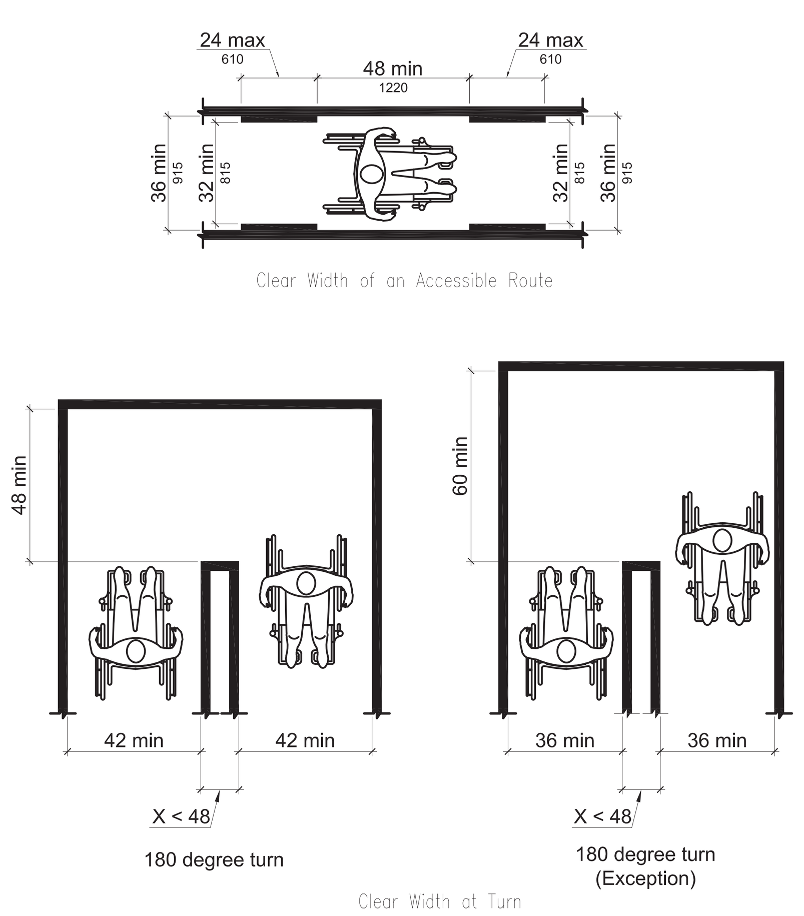

Clear Width of an Accessible Route

Clear Width at Turn

DOOR AND GATE CLEARANCES

Clear Width of Doors, Doorways, and Gates

Maneuvering Clearances at Recessed Doors and Gates

Maneuvering Clearances at Manual Swinging Doors and Gates

Doors in Series and Gates in Series

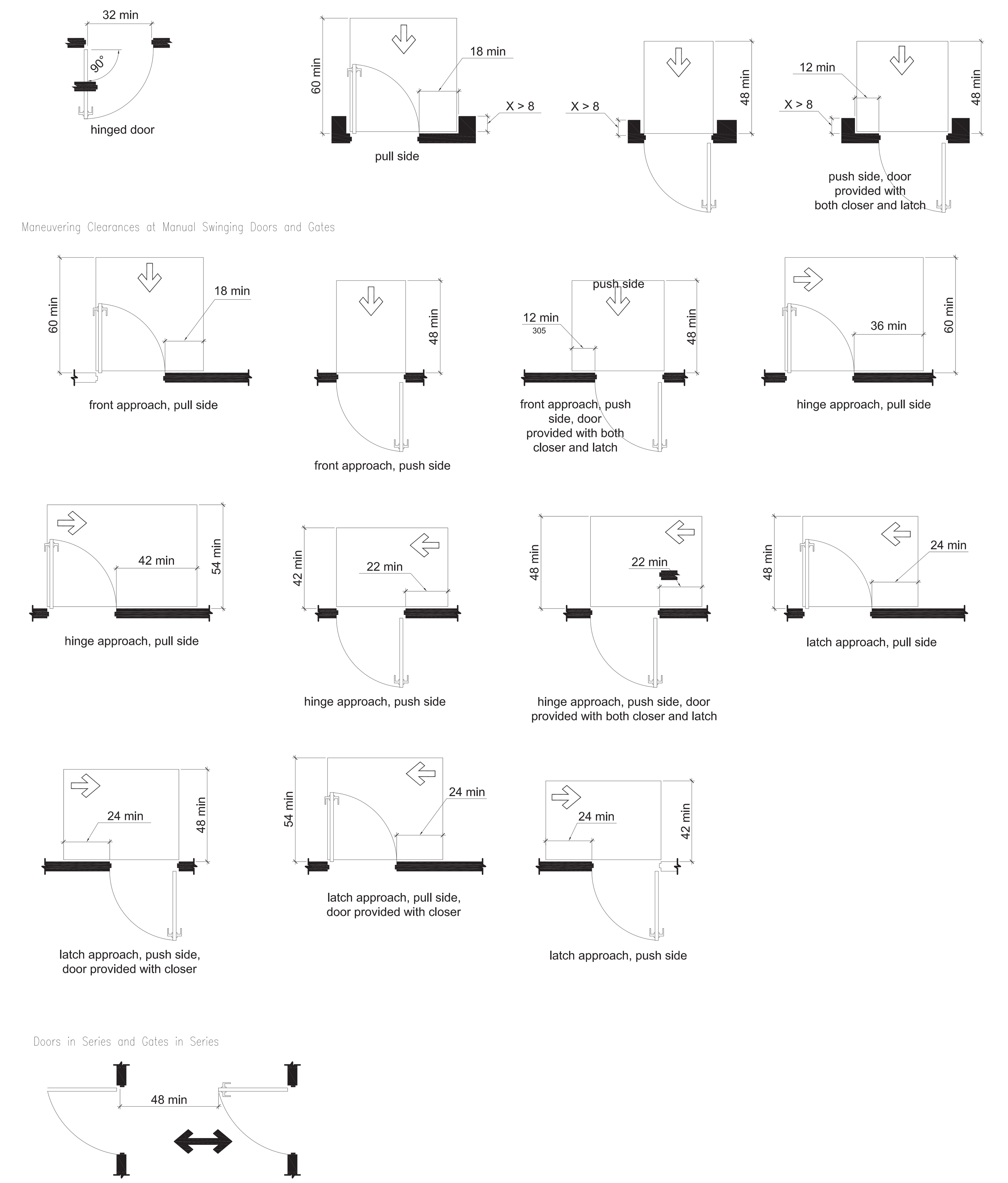

HANDRAILS AND WALKING SURFACES

Handrail Height

Handrail Clearance

Handrail Extensions

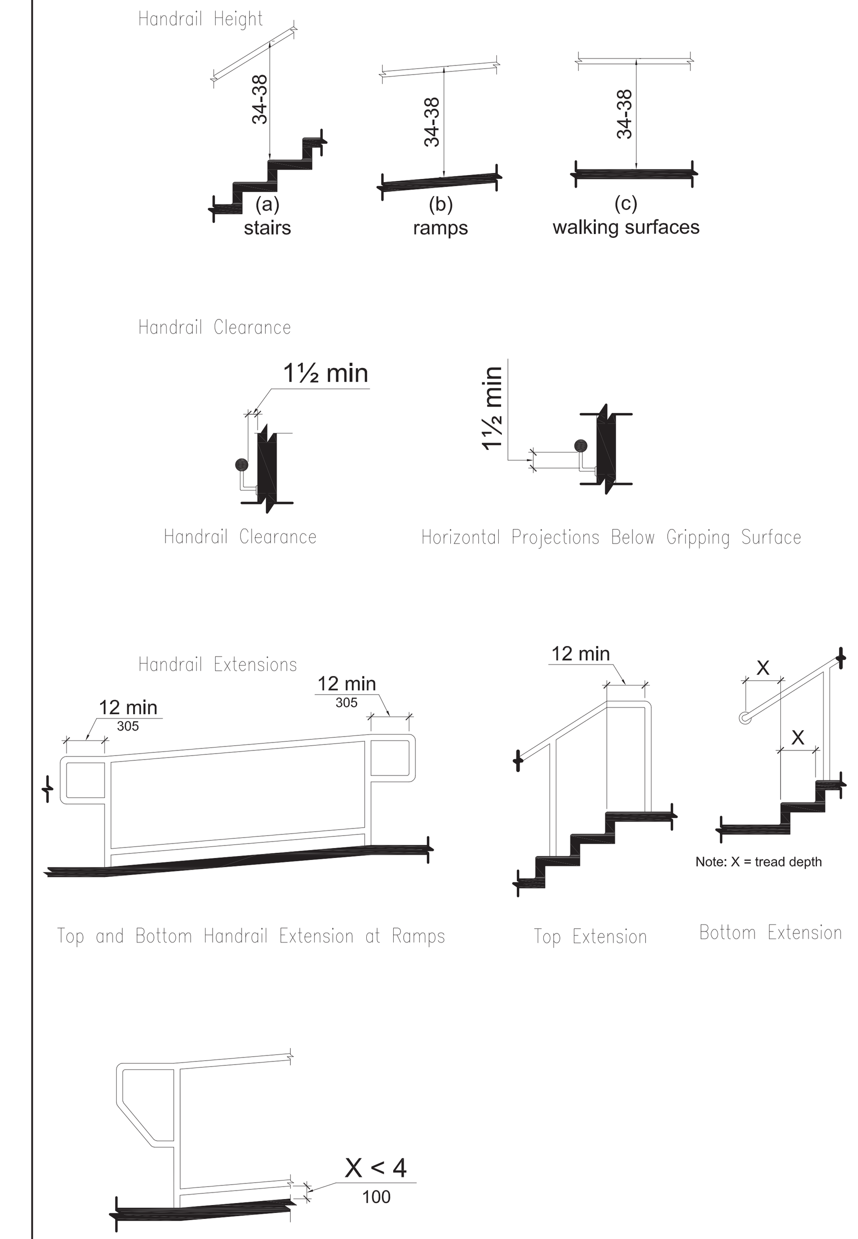

Handrail Clearance

Horizontal Projections Below Gripping Surface

Top and Bottom Handrail Extension at Ramps

Top Extension

Bottom Extension

Curb or Barrier Edge Protection

STAIRS AND HANDRAILS MUST CONFORM TO THE FOLLOWING DIMENSIONS AND REQUIREMENTS UNLESS NOTED OTHERWISE:

- MIN. CLEAR STAIR AND RAMP WIDTH = 44"
- MIN. HEADROOM 6'–8" MEASURED AT LINE CONNECTING NOSINGS
- MAX RISER = 7" / MIN. RISER = 4"
- RISERS MUST BE SOLID
- MIN. TREAD (NOSING TO NOSING) = 11"
- HANDRAIL DIAMETER = 1–1/4" – 2"
- HANDRAILS REQUIRED BOTH SIDES OF STAIRS
- MIN. 2–1/4" CLEAR BETWEEN HANDRAIL AND ADJACENT WALL
- HANDRAIL ENDS RETURNED TO WALL, POST OR CONTINUOUS

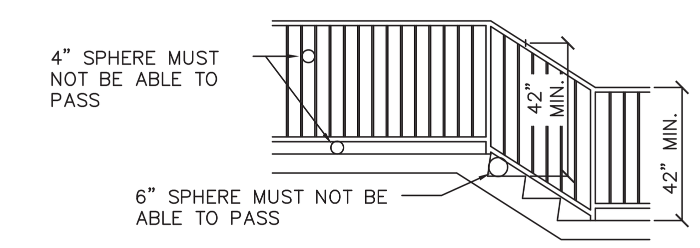

FOR STAIRS REQUIRING GUARDRAILS

GUARDS MUST CONFORM TO THE FOLLOWING DIMENSIONS AND REQUIREMENTS:

REQUIRED WHERE ADJACENT GRADE OR FLOOR IS MORE THAN 30" BELOW
MIN. HEIGHT 42" ABOVE ADJACENT FLOOR SURFACE
MIN. HEIGHT 42" ABOVE LINE CONNECTING STAIR NOSINGS

NOTE: GUARD DETAILS SHOWN ARE ILLUSTRATIVE. DESIGN FOR THIS PROJECT MAY VARY BUT MUST MEET THESE REQUIREMENTS.

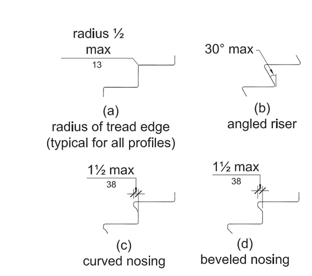

Stair Nosings

Nosings: The radius of curvature at the leading edge of the tread shall be 1/2 inch (13mm) maximum. Nosings that project beyond risers shall have the underside of the leading edge curved or beveled. Risers shall be permitted to slope under the tread at an angle of 30 degrees maximum from vertical. The permitted projection of the nosing shall extend 1 1/2 inches (38mm) maximum over the tread below.

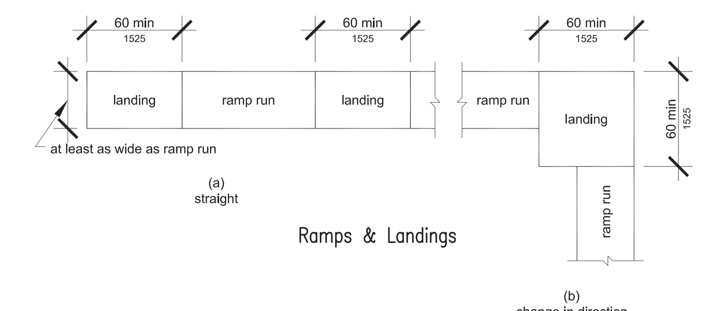

Ramps & Landings

Ramps used as part of a means of egress shall have a running slope not steeper than one unit vertical in 12 units horizontal (8% slope). The slope of other pedestrian ramps shall not be steeper than unit vertical in eight units horizontal (12.5% slope).

PROTRUDING OBJECTS

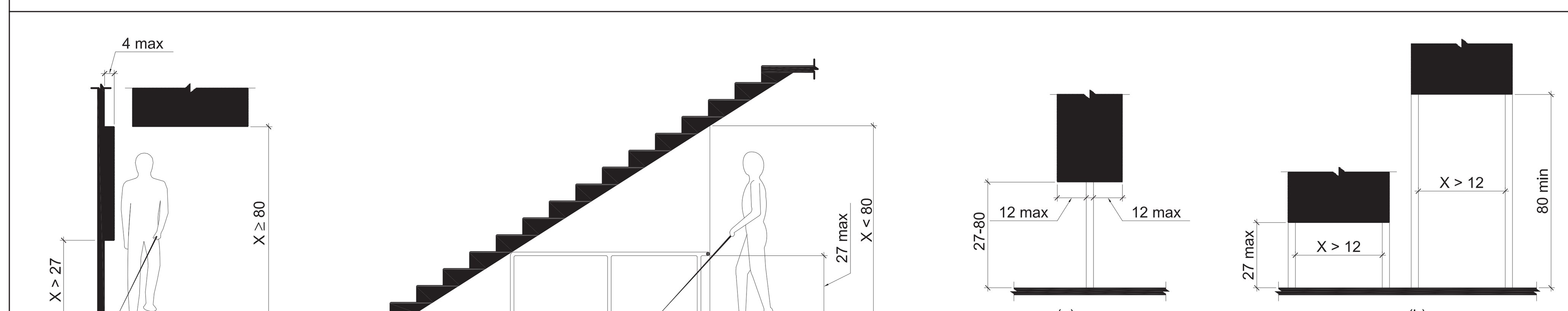

Limits of Protruding Objects

Vertical Clearance

Post–Mounted Protruding Objects

SIGNAGE

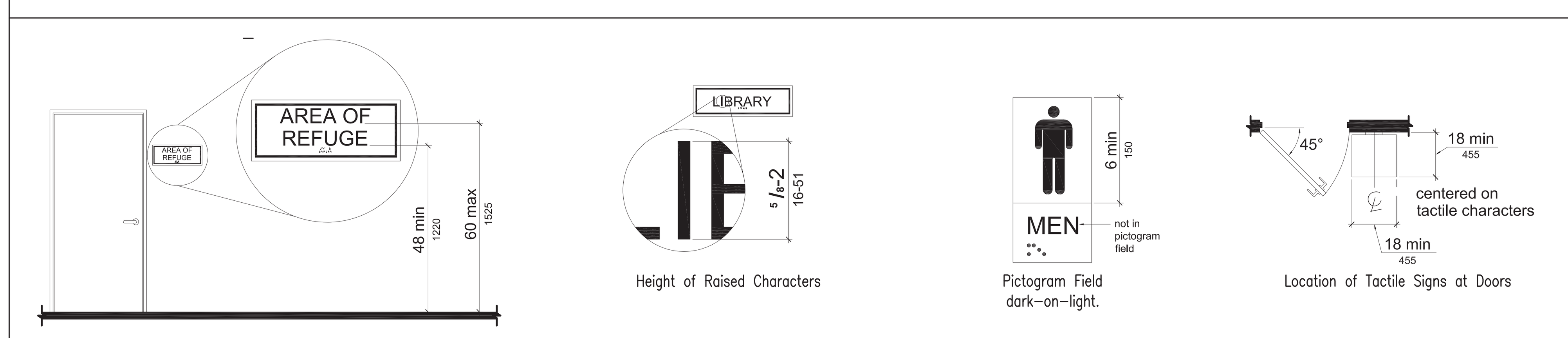

Height of Tactile Characters Above Finish Floor or Ground

Height of Raised Characters

Pictogram Field dark–on–light.

Location of Tactile Signs at Doors

TYPICAL TOILET ROOM DETAILS

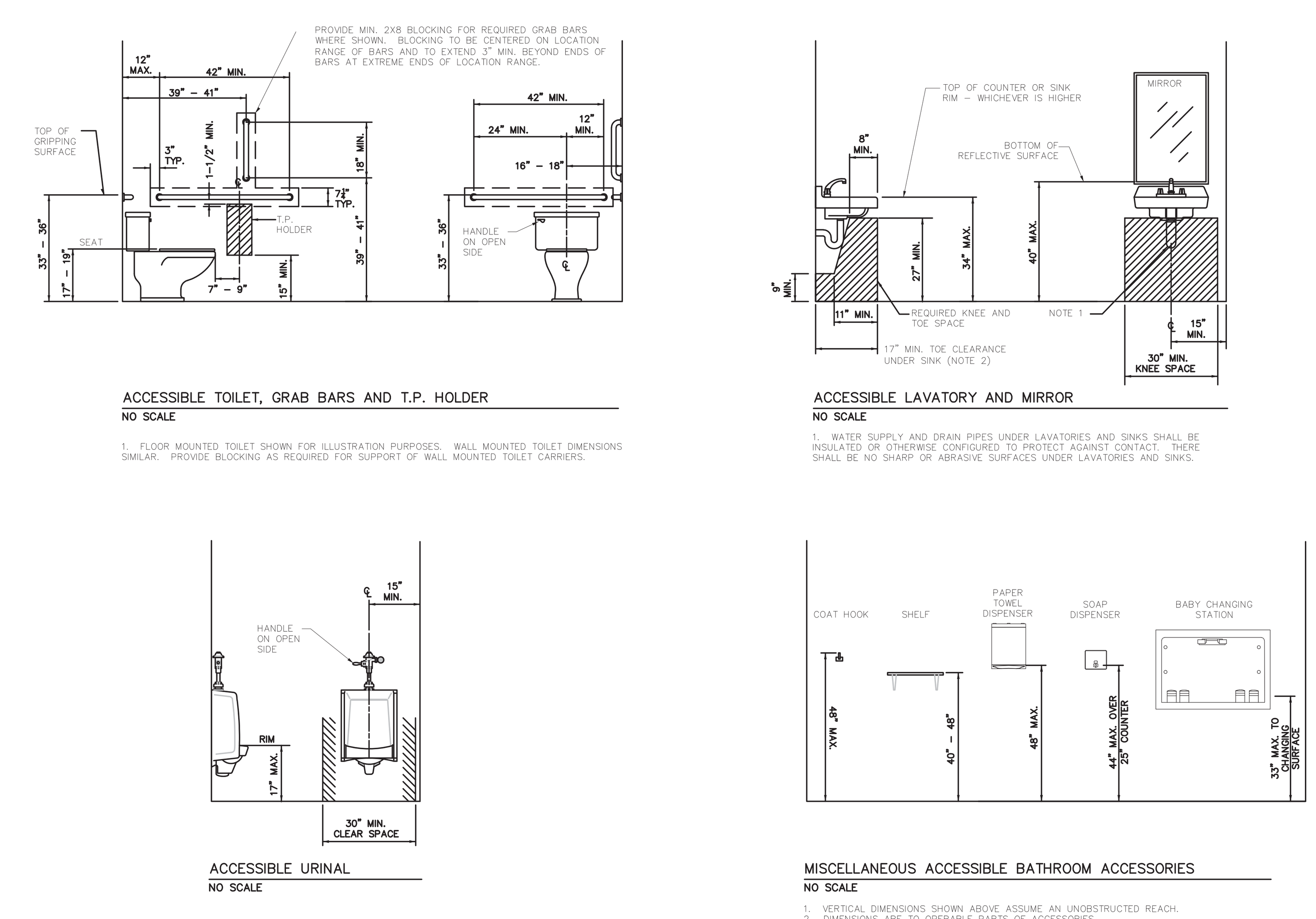

ACCESSIBLE TOILET, GRAB BARS AND T.P. HOLDER
NO SCALE

1. FLOOR MOUNTED TOILET SHOWN FOR ILLUSTRATION PURPOSES. WALL MOUNTED TOILET DIMENSIONS SIMILAR. PROVIDE BLOCKING AS REQUIRED FOR SUPPORT OF WALL MOUNTED TOILET CARRIERS.

ACCESSIBLE LAVATORY AND MIRROR
NO SCALE

1. WATER SUPPLY AND DRAIN PIPES UNDER LAVATORIES AND SINKS SHALL BE INSULATED OR OTHERWISE CONFIGURED TO PROTECT AGAINST CONTACT. THERE SHALL BE NO SHARP OR ABRASIVE SURFACES UNDER LAVATORIES AND SINKS.

ACCESSIBLE URINAL
NO SCALE

MISCELLANEOUS ACCESSIBLE BATHROOM ACCESSORIES
NO SCALE

1. VERTICAL DIMENSIONS SHOWN ABOVE ASSUME AN UNOBSTRUCTED REACH.
2. DIMENSIONS ARE TO OPERABLE PARTS OF ACCESSORIES.
3. PROVIDE BLOCKING FOR SUPPORT OF BATHROOM ACCESSORIES.

AS-BUILT DRAWING

CARENO CONSTRUCTION CO.

Architectural
PORTONE ARCHITECTS
959 Islington Street
Portsmouth, NH 03801
603.436.8891
info@portonearchitects.com
COPYWRIGHT © 2022 BY PORTONE ARCHITECTS, INC.
NO RE-USE WITHOUT PERMISSION

Structural

Fire Protection

Plumbing

HVAC

Electrical

Seal
LICENSED ARCHITECT WILLIAM N. DAVIS No. 1579 THE STATE OF NEW HAMPSHIRE

Rev. No.	Description	Date

Project
GARRISON CITY SPEECH
SUITE #310
INTERIOR FIT-UP
51 WEBB PLACE
DOVER, NH

Phase
PERMIT DOCUMENTS

Project No.	Date: AUG 24, 2022
Scale: As Noted	Drawn By: EM Reviewed By: WD

Sheet Contents
ACCESSIBILITY DETAILS

Sheet No.
A0.2

WALL TYPES:

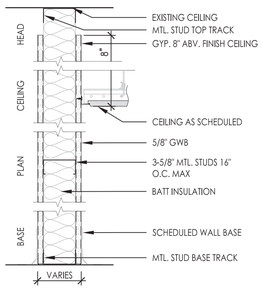

MARK	UNIT SIZE	UNIT SPACING	GWB THICKNESS	TOTAL PARTITION THICKNESS	ACOUSTIC INSULATION	TOP OF WALL	FIRE RATING/ UL DESIGN NO.
M1	3-5/8"	16"	5/8"	4-7/8"	YES	STRUCT. ABV.	
	METAL STUD - 1 LAYER GWB EACH SIDE						

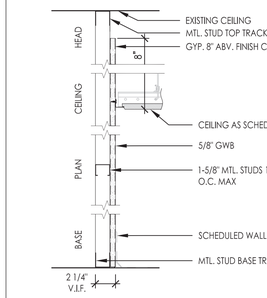

MARK	UNIT SIZE	UNIT SPACING	GWB THICKNESS	TOTAL PARTITION THICKNESS	ACOUSTIC INSULATION	TOP OF WALL	FIRE RATING/ UL DESIGN NO.
F1	1-5/8"	16"	5/8"	2-1/4"	NO	STRUCT. ABV.	
	METAL STUD - 1 LAYER GWB ONE SIDE						

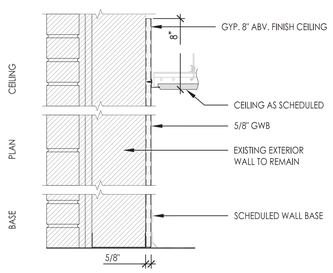

MARK	UNIT SIZE	UNIT SPACING	GWB THICKNESS	TOTAL PARTITION THICKNESS	ACOUSTIC INSULATION	TOP OF WALL	FIRE RATING/ UL DESIGN NO.
E1	-	-	5/8"	5/8"	NO	STRUCT. ABV.	
	WALL FINISH LAYER - 1 LAYER GWB ONTO EXISTING EXTERIOR WALL						

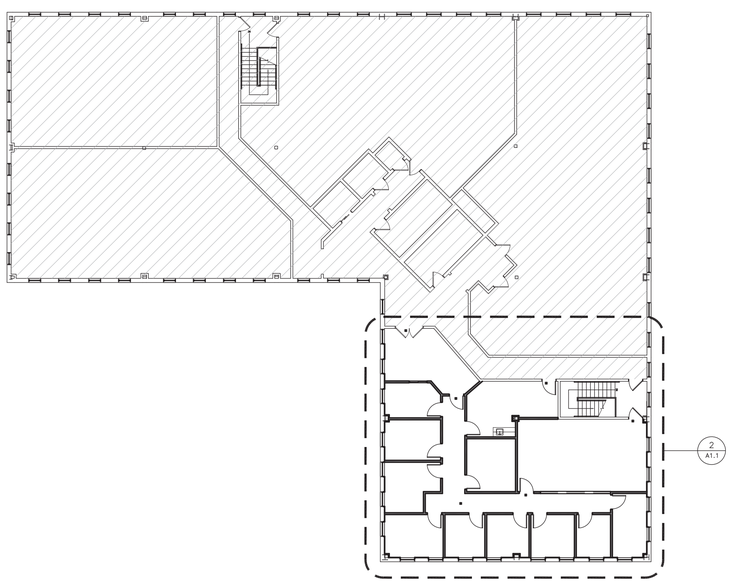

1 BUILDING KEY PLAN
SCALE: 1/16" - 1'-0"

GENERAL CONSTRUCTION NOTES:

1. PRIME ALL SURFACES TO BE PAINTED AND PROVIDE TWO FINISH COATS LOW V.O.C. INTERIOR FINISH PAINT. COLOR AS SPECIFIED OR AS APPROVED BY OWNER.
2. ALL INFILL OF DOORS/WALLS/OPENINGS SHOULD MATCH THE EXISTING CONSTRUCTION UNLESS NOTED OTHERWISE.
3. EMERGENCY LIGHTING AND SIGNAGE TO BE PROVIDED IN ACCORDANCE WITH NFPA 101, ALONG THE PATH OF EGRESS INCLUDING TO A PUBLIC WAY AT THE EXTERIOR OF THE BUILDING.
4. EMERGENCY EGRESS PATH TO BE INDICATED WITH SIGNAGE IN ACCORDANCE WITH NFPA 101.
5. ELECTRICAL REQUIREMENTS SHOWN CONCEPTUALLY AND SHOULD BE PROVIDED IN ACCORDANCE WITH APPLICABLE CODES.
6. DIMENSIONS SHOWN ON PLANS INDICATE MEASUREMENT FROM CENTER OF STUD PARTITION UNLESS OTHERWISE NOTED AS CLEAR DIMENSION FROM FINISH FACE. NOTIFY THE ARCHITECT OF VARIANCES FROM THE DIMENSIONS SHOWN.
7. ALL EXPOSED GYPSUM BOARD EDGES TO HAVE METAL EDGE BEAD.
8. CLEAN AND TEST MECHANICAL EQUIPMENT AND AIR HANDLERS. REPLACE FILTERS IN ALL AIR HANDLERS.
9. CONTRACTORS TO VERIFY ALL DIMENSIONS AND CONDITIONS IN THE FIELD PRIOR TO COMMENCING WORK UNDER THIS CONTRACT.
10. PROVIDE BLOCKING FOR ALL MILLWORK, FIXED FURNITURE, AND A/V DEVICES. ALL CONCEALED LUMBER AND BLOCKING TO BE FIRE TREATED. COORDINATE BLOCKING REQUIREMENTS WITH FURNITURE INSTALLERS AS REQUIRED FOR OFFICE LAYOUTS.
11. WHERE BLOCKING MODIFICATION IS REQUIRED TO EXISTING WALLS, CARRY ALLOWANCE TO PATCH, REPAIR, AND PAINT AS NECESSARY.
12. ALL FLOOR AND WALL PENETRATION FOR PIPING SHALL BE FULLY SEALED IN ACCORDANCE WITH THE APPLICABLE BUILDING AND FIRE CODES.
13. PROVIDE MOISTURE RESISTANT GYPSUM WALL BOARD (WET SIDE) IN LAVATORIES AND JANITORS CLOSET.

FLOOR PLAN LEGEND:

- NOT IN CONTRACT (NIC)
- EXISTING PARTITION TO REMAIN
- NEW PARTITION
- F.E. — SEMI-RECESSED FIRE EXTINGUISHER CABINET
- EXISTING DOOR TO REMAIN
- 100 — NEW DOOR, FRAME AND/OR HARDWARE

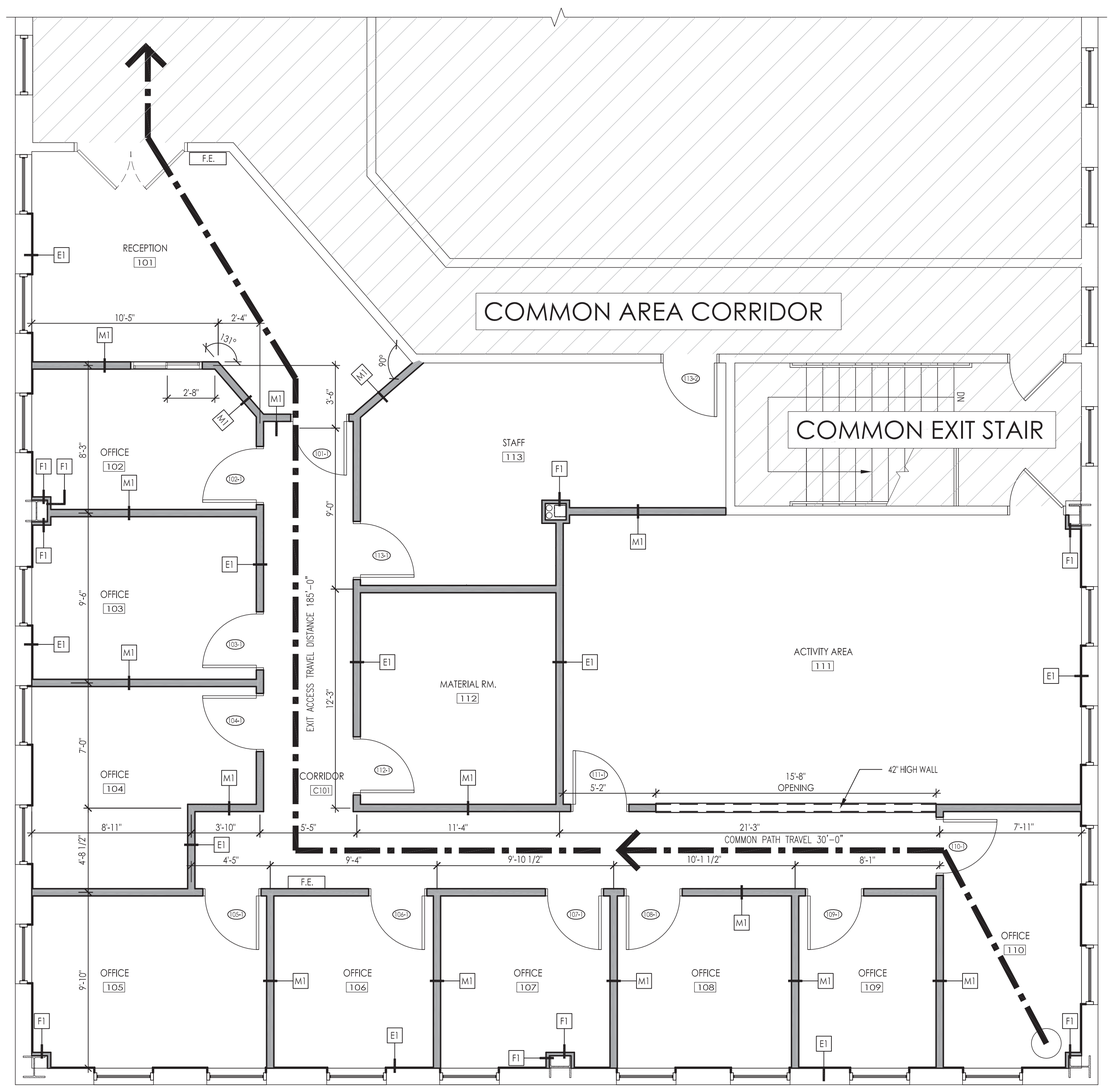

AS-BUILT DRAWING

2 UNIT FLOOR PLAN
SCALE: 1/4" - 1'-0"

CARENO CONSTRUCTION CO.

Architectural
PORTONE ARCHITECTS
959 Islington Street
Portsmouth, NH 03801
603.436.8891
info@portonearchitects.com
COPYWRIGHT © 2022 BY PORTONE ARCHITECTS, INC.
NO REUSE WITHOUT PERMISSION

Structural

Fire Protection

Plumbing

HVAC

Electrical

Seal
LICENSED ARCHITECT WILLIAM DAVIS No. 1579 STATE OF NEW HAMPSHIRE

Rev. No.	Description	Date

Project
GARRISON CITY SPEECH
SUITE #310
INTERIOR FIT-UP
51 WEBB PLACE
DOVER, NH

Phase
PERMIT DOCUMENTS

Project No.

Date
AUG 24, 2022

Scale
As Noted

Drawn By: EM
Reviewed By: WD

Sheet Contents
UNIT FLOOR PLAN & WALL TYPES

Sheet No.
A1.1

SOFFIT DETAILS:

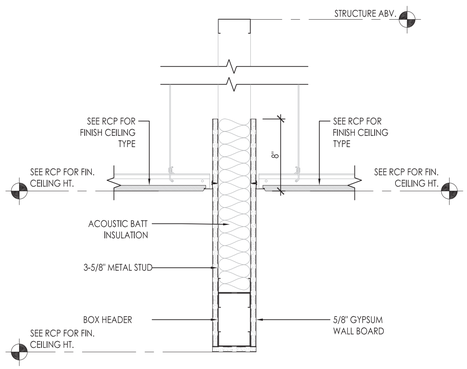

4 SOFFIT DETAIL
SCALE: 1-1/2" - 1'-0"

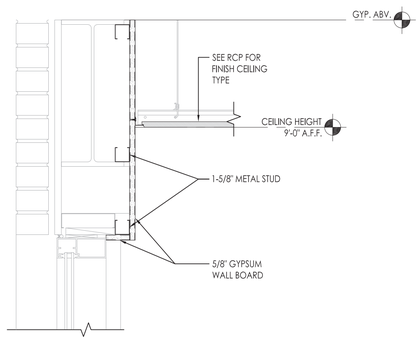

3 SOFFIT DETAIL
SCALE: 1-1/2" - 1'-0"

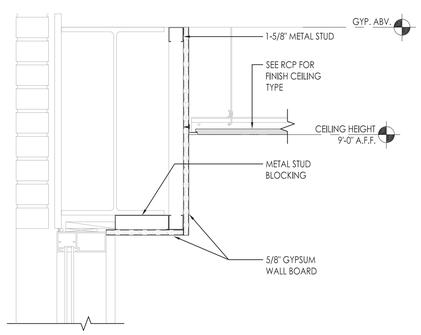

2 SOFFIT DETAIL
SCALE: 1-1/2" - 1'-0"

REFLECTED CEILING PLAN LEGEND:

GYP 7' - 5"	CEILING TYPE - TO MATCH EXISTING CEILING HEIGHT
	GYP-1: 5/8" TYPE C GYPSUM CEILING BOARD
	ACT-1: 2X2 WHITE ROCKPHON TILE WITH 7300 PRELUDE ML 15/16" GRID
TL1	2x2 TROFFER LED LIGHT FIXTURE
EBU1	EMERGENCY BATTERY UNIT WITH MOUNTING BRACKET AND VOLTMETER
	UNIVERSAL MOUNTING EXIT SIGN

CEILING GENERAL NOTES:

1. PROVIDE GYPSUM CEILING BOARD AT LOCATIONS INDICATED
2. CENTER CEILING LIGHTS IN ROOMS UNLESS OTHERWISE NOTED
3. ALL EMERGENCY LIGHTING, FIRE ALARMS, SMOKE DETECTORS, ETC. TO BE INSTALLED BY SUBCONTRACTOR IN ACCORDANCE WITH CODE REQUIREMENTS. SYMBOLS ARE SHOWN ONLY FOR INTENT.
4. PATCH AND REPAIR ANY SURFACES PRIOR TO INSTALLATION OF NEW FINISH

AS-BUILT DRAWING

1 UNIT REFLECTED CEILING PLAN
SCALE: 1/4" - 1'-0"

CARENO CONSTRUCTION CO.

Architectural
PORTONE ARCHITECTS
959 Islington Street
Portsmouth, NH 03801
603.436.8891
info@portonearchitects.com
COPYWRIGHT © 2022 BY PORTONE ARCHITECTS, INC.
NO RELEASE WITHOUT PERMISSION

Structural

Fire Protection

Plumbing

HVAC

Electrical

Seal
LICENSED ARCHITECT WILLIAM DAVIS No. 1579 THE STATE OF NEW HAMPSHIRE

Rev. No.	Description	Date

Project
GARRISON CITY SPEECH
SUITE #310
INTERIOR FIT-UP
51 WEBB PLACE
DOVER, NH

Phase
PERMIT DOCUMENTS

Project No.
Date
AUG 24, 2022
Scale
As Noted
Drawn By: EM
Reviewed By: WD

Sheet Contents
UNIT REFLECTED CEILING PLAN & SOFFIT DETAILS

Sheet No.
A1.1A

DOOR SCHEDULE:

NO.	FROM ROOM	TO ROOM	DOOR					FRAME		HDWR	NOTES
			WIDTH	HEIGHT	THICK.	MATL.	TYPE	MATL.	TYPE		
101-1	RECEPTION 101	CORRIDOR C101	3'-0"	7'-0"	1-3/4"	WD.	A	HM	1	SET 1	PAINT - TBD
102-1	CORRIDOR C101	OFFICE 102	3'-0"	7'-0"	1-3/4"	WD.	A	HM	1	SET 2	PAINT PT-2 / PROVIDE GASKET ON FRAME
103-1	CORRIDOR C101	OFFICE 103	3'-0"	7'-0"	1-3/4"	WD.	A	HM	1	SET 2	PAINT PT-2 / PROVIDE GASKET ON FRAME
104-1	CORRIDOR C101	OFFICE 104	3'-0"	7'-0"	1-3/4"	WD.	A	HM	1	SET 2	PAINT PT-2 / PROVIDE GASKET ON FRAME
105-1	CORRIDOR C101	OFFICE 105	3'-0"	7'-0"	1-3/4"	WD.	A	HM	1	SET 2	PAINT PT-2 / PROVIDE GASKET ON FRAME
106-1	CORRIDOR C101	OFFICE 106	3'-0"	7'-0"	1-3/4"	WD.	A	HM	1	SET 2	PAINT PT-2 / PROVIDE GASKET ON FRAME
107-1	CORRIDOR C101	OFFICE 107	3'-0"	7'-0"	1-3/4"	WD.	A	HM	1	SET 2	PAINT PT-2 / PROVIDE GASKET ON FRAME
108-1	CORRIDOR C101	OFFICE 108	3'-0"	7'-0"	1-3/4"	WD.	A	HM	1	SET 2	PAINT PT-2 / PROVIDE GASKET ON FRAME
109-1	CORRIDOR C101	OFFICE 109	3'-0"	7'-0"	1-3/4"	WD.	A	HM	1	SET 2	PAINT PT-2 / PROVIDE GASKET ON FRAME
110-1	CORRIDOR C101	OFFICE 110	3'-0"	7'-0"	1-3/4"	WD.	A	HM	1	SET 2	PAINT PT-2 / PROVIDE GASKET ON FRAME
111-1	CORRIDOR C101	ACTIVITY 111	3'-0"	7'-0"	1-3/4"	WD.	A	HM	1	SET 2	PAINT PT-2
112-1	CORRIDOR C101	MATERIALS RM. 112	3'-0"	7'-0"	1-3/4"	WD.	A	HM	1	SET 3	PAINT PT-2
113-1	CORRIDOR C101	STAFF 113	3'-0"	7'-0"	1-3/4"	WD.	A	HM	2	SET 1	PAINT PT-2
113-2	COMMON CORRIDOR	STAFF 113	3'-0"	7'-0"	1-3/4"	WD.	A	HM	4	SET 4	20 MIN RATED DOOR/FRAME ASSEMBLY

DOOR TYPES:

DOOR TYPE A
FLUSH WOOD VENEER DOOR
UNFINISHED (PAINT/STAIN GRADE)

FRAME TYPES:

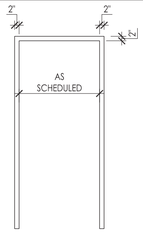

FRAME TYPE 1
HOLLOW METAL DOOR FRAME

HARDWARE SCHEDULE:

SET #	QTY.	FUNCTION	MANUFACTURER	MODEL	FINISH
SET 1	3	HINGES	HAGER	BB1279 4 1/2" x 4 1/2"	622
	1	PASSAGE LATCH	SCHLAGE	AL10S-JUP	622
	1	ANSI STRIKE - STANDARD	SCHLAGE	10-025	622
	1	FLOOR STOP	HAGER	241F	622
	3	SILENCER	HAGER	307D	GRAY
	1	CLOSER	YALE	4420	622
SET 2	3	HINGES	HAGER	BB1279 4 1/2" x 4 1/2"	622
	1	OFFICE LOCK	SCHLAGE	AL50-JUP	622
	1	ANSI STRIKE - STANDARD	SCHLAGE	10-025	622
	1	FLOOR STOP	HAGER	241F	622
	3	SILENCER	HAGER	307D	GRAY
SET 3	3	HINGE	HAGER	BB1279 4 1/2" x 4 1/2"	622
	1	STORE ROOM LOCKSET	SCHLAGE	AL80PD-JUP	622
	1	ANSI STRIKE - STANDARD	SCHLAGE	10-025	622
	1	FLOOR STOP	HAGER	241F	622
	3	SILENCER	HAGER	307D	GRAY
SET4	3	HINGE	HAGER	BB1279 4 1/2" x 4 1/2"	622
	1	ENTRY LOCKSET	MATCH EXIST	MATCH EXIST	MATCH EXIST
	1	ANSI STRIKE - STANDARD	SCHLAGE	10-025	622
	3	SILENCER	HAGER	307D	GRAY
	1	CLOSER	YALE	4420	622

DOOR & HARDWARE GENERAL NOTES:

1. PROVIDE SHOP DRAWINGS FOR ARCHITECT'S REVIEW PRIOR TO DOOR ORDER.
2. PROVIDE JAMB EXTENSIONS AS REQUIRED.
3. ALL KEYING SHALL BE BY GENERAL CONTRACTOR. VERIFY THE NUMBER OF KEYS REQUIRED FOR THIS PROJECT WITH THE OWNER.
4. ALL DOOR SWINGS AND OPERATIONS SHALL BE SHOWN ON PLANS AND ELEVATIONS.
5. AT HOLLOW METAL FRAMES, CAULK THE JOINT BETWEEN THE FRAME AND WALL, ALL SIDES, WITH PAINTABLE WHITE LATEX CAULK.
6. G.C. TO PROTECT PREFINISHED DOORS AND FRAMES THROUGH THE CONSTRUCTION PERIOD. DOORS THAT ARE DAMAGED AS A RESULT OF THE G.C. OR THEIR SUBCONTRACTOR'S WORK DURING THIS PERIOD SHALL BE REPAIRED OR REPLACED BY THE G.C.
7. ALL DOOR HARDWARE SHALL BE A.D.A. ACCESSIBLE. ALL DOORS SHALL COMPLY WITH THE ICC/ANSI 404 AND SHALL HAVE LEVER OR EQUAL HARDWARE.
8. HARDWARE SCHEDULE PROVIDED AS BASIS OF DESIGN ONLY. FINAL HARDWARE SETS SHALL BE APPROVED BY ARCHITECT THROUGH SHOP DRAWINGS.
9. ALL H.M. DOORS AND FRAMES PAINTED TO MATCH PT-2, U.N.O.
10. PROVIDE GASKETING AROUND FRAME ON OFFICE DOORS.

PLUMBING FIXTURE SCHEDULE:

TYPE	MFR.	MODEL	DESIGNATION	MOUNT	NOTES
SINK	MOEN (OR EQUAL)	GS18191	PF-1	UNDER-MOUNT	
SINK FAUCET	MOEN	7585SRS	PF-2	SINGLE HOLE	SPOT RESISTANT STAINLESS FINISH

INTERIOR ELEVATIONS

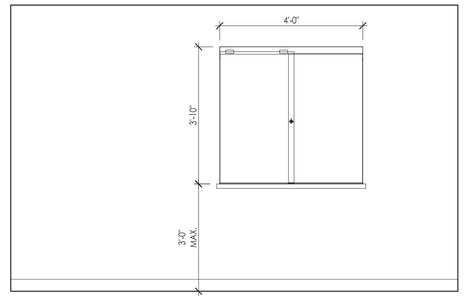

1 INT. ELEVATION @ OFFICE 102
SCALE: 1/2" - 1'-0"

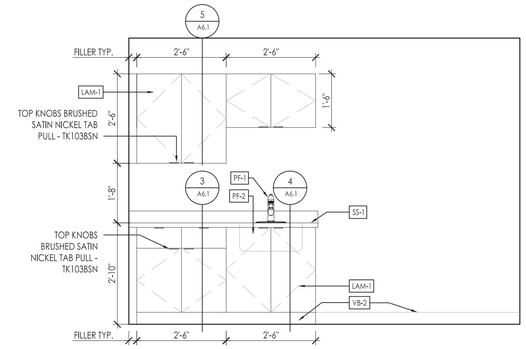

2 INT. ELEVATION @ STAFF 113
SCALE: 1/2" - 1'-0"

DETAILS:

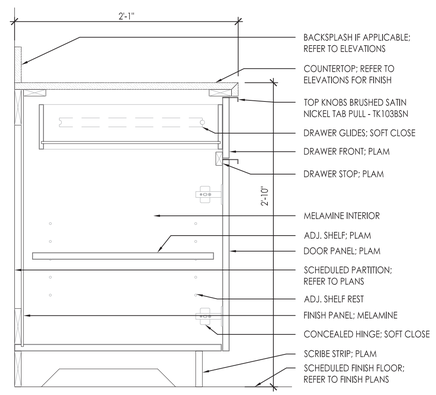

3 TYP. MILLWORK DETAIL
SCALE: 1-1/2" - 1'-0"

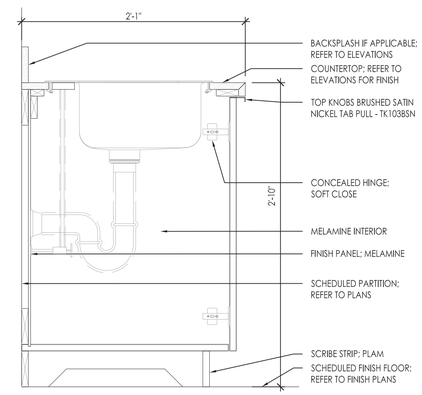

4 TYP. MILLWORK DETAIL
SCALE: 1-1/2" - 1'-0"

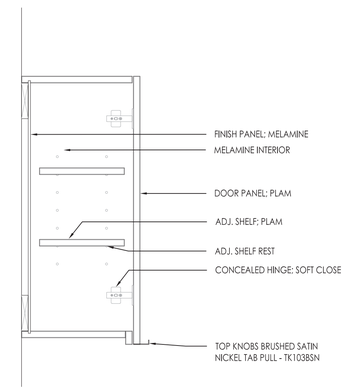

5 TYP. MILLWORK DETAIL
SCALE: 1-1/2" - 1'-0"

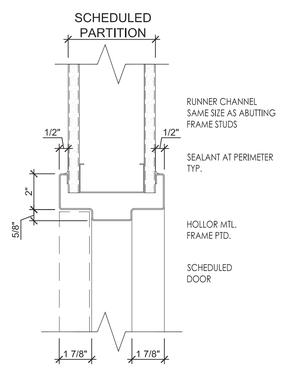

6 TYP. DOOR HEAD DETAIL
SCALE: 3" - 1'-0"

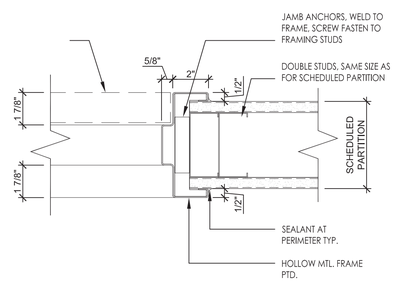

7 TYP. DOOR JAMB DETAIL
SCALE: 3" - 1'-0"

AS-BUILT DRAWING

CARENO CONSTRUCTION CO.

Architectural
PORTONE ARCHITECTS
959 Islington Street
Portsmouth, NH 03801
603.436.8891
info@portonearchitects.com
COPYWRIGHT © 2022 BY PORTONE ARCHITECTS, INC.
NO REUSE WITHOUT PERMISSION

Structural

Fire Protection

Plumbing

HVAC

Electrical

Seal
LICENSED ARCHITECT WILLIAM DAVIS No. 1579 THE STATE OF NEW HAMPSHIRE

Rev. No.	Description	Date

Project
GARRISON CITY SPEECH
SUITE #310
INTERIOR FIT-UP
51 WEBB PLACE
DOVER, NH

Phase
PERMIT DOCUMENTS

Project No.

Date
AUG 24, 2022

Scale
As Noted

Drawn By: EM
Reviewed By: WD

Sheet Contents
SCHEDULES, DOOR & FRAME TYPES, INTERIOR ELEVATIONS & DETAILS

Sheet No.
A6.1

GENERAL FINISH NOTES:

1. REVIEW ALL DRAWINGS, NOTES, AND SCHEDULES WITH OWNER PRIOR TO COMMENCING WORK. ANY SURFACE TO RECEIVE NEW FINISHES AS SCHEDULED MUST BE ADEQUATELY PREPARED, INCLUDING ANY DEMOLITION AND REMOVAL OF EXISTING FINISHES (CARPET, WALL COVERINGS, ETC.)
2. ALL PAINTED SURFACES ARE TO RECEIVE A PRIME COAT AND A MINIMUM OF TWO COATS FINAL COLOR.
3. INSTALL ALL FINISH MATERIALS IN ACCORDANCE WITH THE MANUFACTURER'S RECOMMENDED SPECIFICATIONS, SURFACE PREPARATION, ADHESIVES AND BACKINGS.
4. THE CONTRACTOR SHALL REPAIR ALL SUB-FLOOR UNEVENNESS SUITABLE FOR PROPER FLOOR COVERING INSTALLATION.
5. PROVIDE TRANSITION STRIPS AT ALL FLOORING MATERIAL CHANGES
6. BASE TO BE STRAIGHT FOR CARPET AND COVE FOR LVT.
7. ALL FLOOR FINISH TRANSITIONS ARE TO OCCUR AT THE MIDDLE OF DOORS UNLESS OTHERWISE NOTED.
8. NOTIFY ARCHITECT OF ANY EXISTING FINISHES THAT ARE UNAVAILABLE OR DISCONTINUED.
9. ALL WALLS TO RECEIVE PT-1 UNLESS OTHERWISE NOTED.
10. ALL SURFACES SHALL BE PREPARED TO RECEIVE THE SPECIFIED FINISH. ALL GYPSUM BOARD PARTITIONS SHALL BE TAPED AND SANDED SMOOTH AND PREPARED TO RECEIVE THE SPECIFIED FINISH. PAINT GRADE WOODWORK SHALL BE HAND SANDED BETWEEN COATS AND DUSTED CLEAN.
11. ALL CRACKS AND IMPERFECTIONS IN EXISTING WALLS, PARTITIONS OR GYPSUM BOARD SHALL BE FILLED AND SMOOTHED TO MATCH ADJOINING SURFACES.
12. EXAMINE ALL FINISH SURFACES AFTER COMPLETION OF WORK INCLUDING MILLWORK INSTALLATION AND PROCEED WITH "TOUCH-UP" AS REQUIRED.
13. ELECTRICAL SWITCH AND OUTLET COVER PLATES, SURFACE HARDWARE, ETC. SHALL BE INSTALLED AFTER PAINTING AND/OR APPLICATION OF WALL COVERINGS AND SPECIFIED CARPET.
14. CONTRACTOR SHALL BE RESPONSIBLE FOR ALLOWING FOR DELIVERY LEAD TIME FOR ALL FINISHES WITHIN THE CONSTRUCTION SCHEDULE. ALL DELIVERY TIMES MUST BE CONFIRMED AND ANY EXCESSIVE LEAD TIME MUST BE BROUGHT TO THE ARCHITECT'S ATTENTION TO ALLOW FOR RE-SPECIFICATION IF NECESSARY.
15. SEE FINISH PLAN, ELEVATIONS AND DETAILS FOR CLARIFICATION OF EXTENT OF FINISH MATERIALS.
16. STAINED AND PAINTED SURFACES SHALL BE FINISHED SUCH THAT JOINTS ARE NOT VISIBLE WHEN VIEWED FROM ANY REASONABLE ANGLE.
17. CONTRACTOR SHALL NOTIFY ARCHITECT IMMEDIATELY OF ANY DISCREPANCIES IN THE FIELD.
18. CARPET ENDS SHALL BE SEALED WHERE A CHANGE IN CARPET FINISH OCCURS (WHERE TWO DIFFERENT CARPETS MEET).
19. ALL WALLS SHALL BE PAINTED WITH A LATEX BASE EGGSHELL FINISH, UON.
20. ALL DOORS AND FRAMES SHALL BE PAINTED PT-2 WITH A LATEX BASE SEMI-GLOSS FINISH, UON.
21. GYPSUM BOARD CEILINGS SCHEDULED TO RECEIVE PAINT SHALL HAVE A FLAT FINISH, UON.
22. CONTRACTOR SHALL THOROUGHLY VACUUM CLEAN ALL CARPETED AREAS AFTER TECH INSTALLATION IS COMPLETE AND SHALL MAINTAIN THOSE CONDITIONS UNTIL OCCUPANCY.

FINISH TYPES:

MARK	MATERIAL	MANUFACTURER	MODEL	SIZE	NOTES
LVT-1	LVT	MILLIKEN	NATURAL / PIKE/ COLOR - CLOUD PIK144 INSTALLATION - PLANK	9" x 59.7"	
CPT-1	CARPET	MILLIKEN	FREEFLOW / CLOTH / COLOR - STREAM CTH264 INSTALLATION - MONOLITHIC	19.7" x 19.7"	
CPT-2	CARPET	MILLIKEN	FREEFLOW / CLOTH / COLOR - STREAM CTH264 INSTALLATION - MONOLITHIC	19.7" x 19.7"	
VB-1	4" VINYL WALL BASE - STRAIGHT	TARKETT	TRADITIONAL / COLOR - PLATINUM 21	-	STRAIGHT AT CARPET
VB-2	4" VINYL WALL BASE - COVE	TARKETT	TRADITIONAL / COLOR - PLATINUM 21	-	COVE AT LVT
WB-1	4" WOOD WALL BASE	-	PRE-PRIMED PINE	-	IN COMMON AREAS ONLY
PT-1	FIELD PAINT	BENJAMIN MOORE	SHORELINE 1471 (EGGSHELL)	-	COORDINATE W/ OWNER
PT-2	TRIM PAINT	BENJAMIN MOORE	DECORATORS WHITE PM-3	-	COORDINATE W/ OWNER
PT-3	ACCENT PAINT	BENJAMIN MOORE	HUDSON BAY 1680 (EGGSHELL)	-	COORDINATE W/ OWNER
PT-4	ACCENT PAINT	BENJAMIN MOORE	COVENTRY GRAY HC 169	-	COORDINATE W/ OWNER
TS-2	TRANSITION STRIP	TARKETT	METALEDGE / ME001 / COLOR: 179 STEEL	-	PROVIDE AT CHANGE IN FLOOR FINISH LVT-1 TO CPT
ACT-1	ACOUSTIC CEILING TILE	ROCKPHON	SQUARE LAY-IN TILES IN 15/16" GRID	24" x 24"	-
SS-1	SOLID SURFACE	QUARTZ	-	-	-

FINISH LEGEND:

CPT-1

CPT-2

LVT-1

FLOORING ORIENTATION

TS-1 TRANSITION STRIP

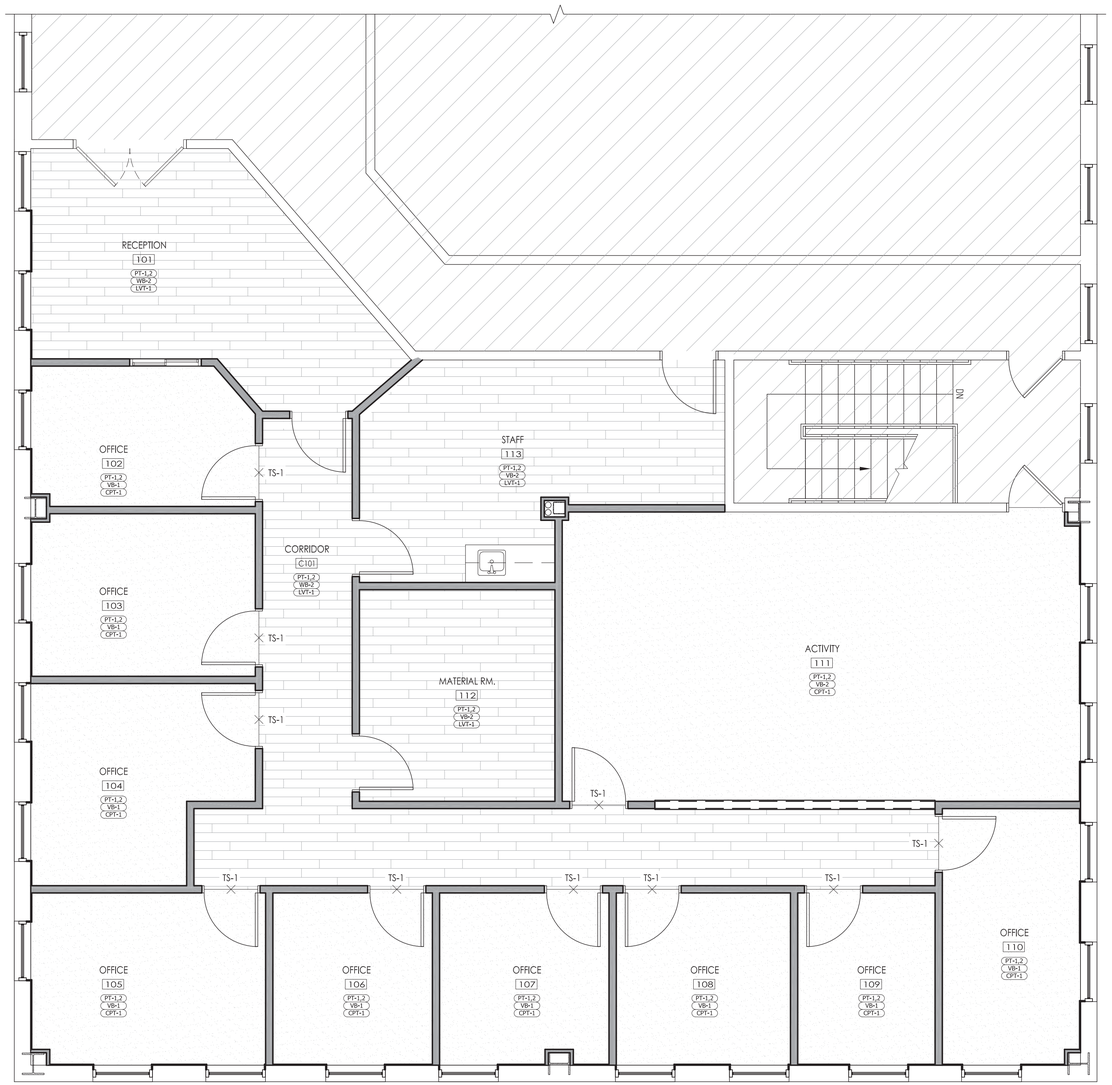

AS-BUILT DRAWING

1 UNIT FINISH FLOOR PLAN
SCALE: 1/4" - 1'-0"

CARENO CONSTRUCTION CO.

Architectural
PORTONE ARCHITECTS
959 Islington Street
Portsmouth, NH 03801
603.436.8891
info@portonearchitects.com
COPYWRIGHT © 2022 BY PORTONE ARCHITECTS, INC.
NO RELEASE WITHOUT PERMISSION

Structural

Fire Protection

Plumbing

HVAC

Electrical

Seal
LICENSED ARCHITECT WILLIAM DAVIS No. 1579 THE STATE OF NEW HAMPSHIRE

Rev. No.	Description	Date

Project
GARRISON CITY SPEECH
SUITE #310
INTERIOR FIT-UP
51 WEBB PLACE
DOVER, NH

Phase
PERMIT DOCUMENTS

Project No.

Date
AUG 24, 2022

Scale
As Noted

Drawn By: EM
Reviewed By: WD

Sheet Contents
UNIT FINISH FLOOR PLAN

Sheet No.
F1.1

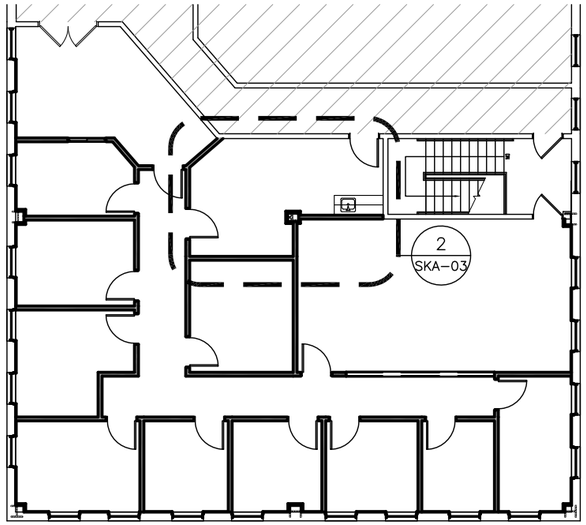

1 BUILDING KEY PLAN
SCALE: 1/16" - 1'-0"

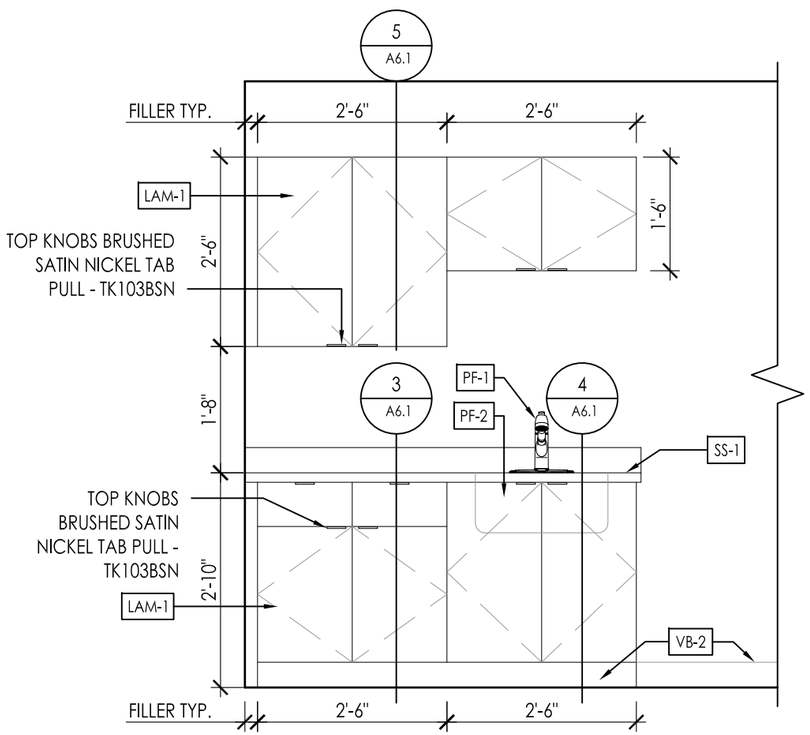

2 INTERIOR ELEVATION
SCALE: 1/2" - 1'-0"

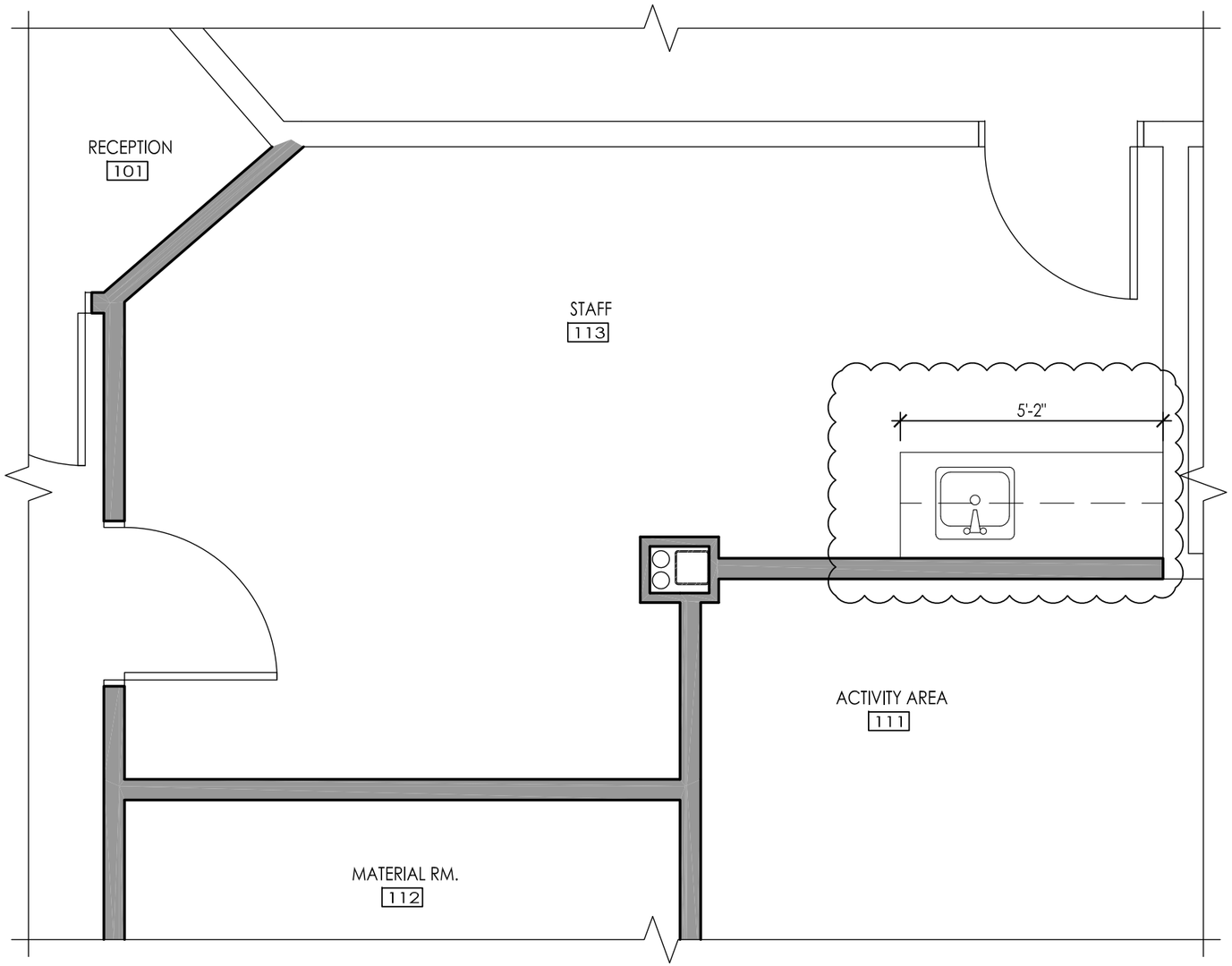

3 ENLARGED FLOOR PLAN @ STAFF 113
SCALE: 3/8" - 1'-0"

AS-BUILT DRAWING

CARENO CONSTRUCTION CO.

PORTONE ARCHITECTS
959 Islington Street
Portsmouth, NH 03801
603.436.8891
info@portonearchitects.com

GARRISON CITY
SPEECH
SUITE #310
INTERIOR FIT-UP

51 WEBB PLACE
DOVER, NH

KITCHENETTE
RELOCATION

SCALE: AS NOTED
DATE: 10/05/2022

SKA-01

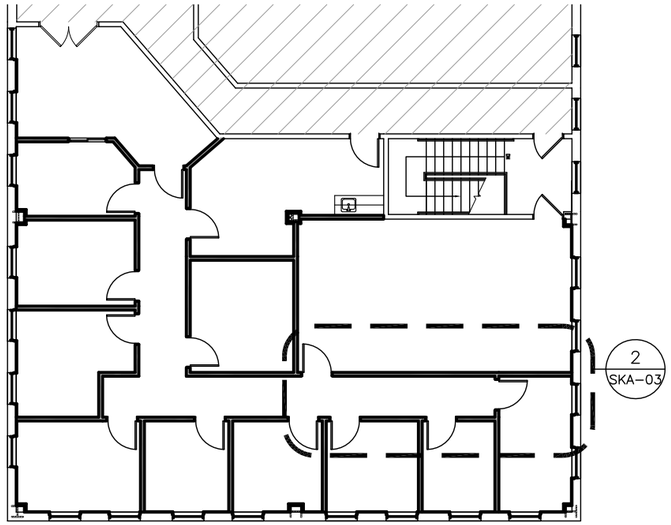

1 BUILDING KEY PLAN
SCALE: 1/16" - 1'-0"

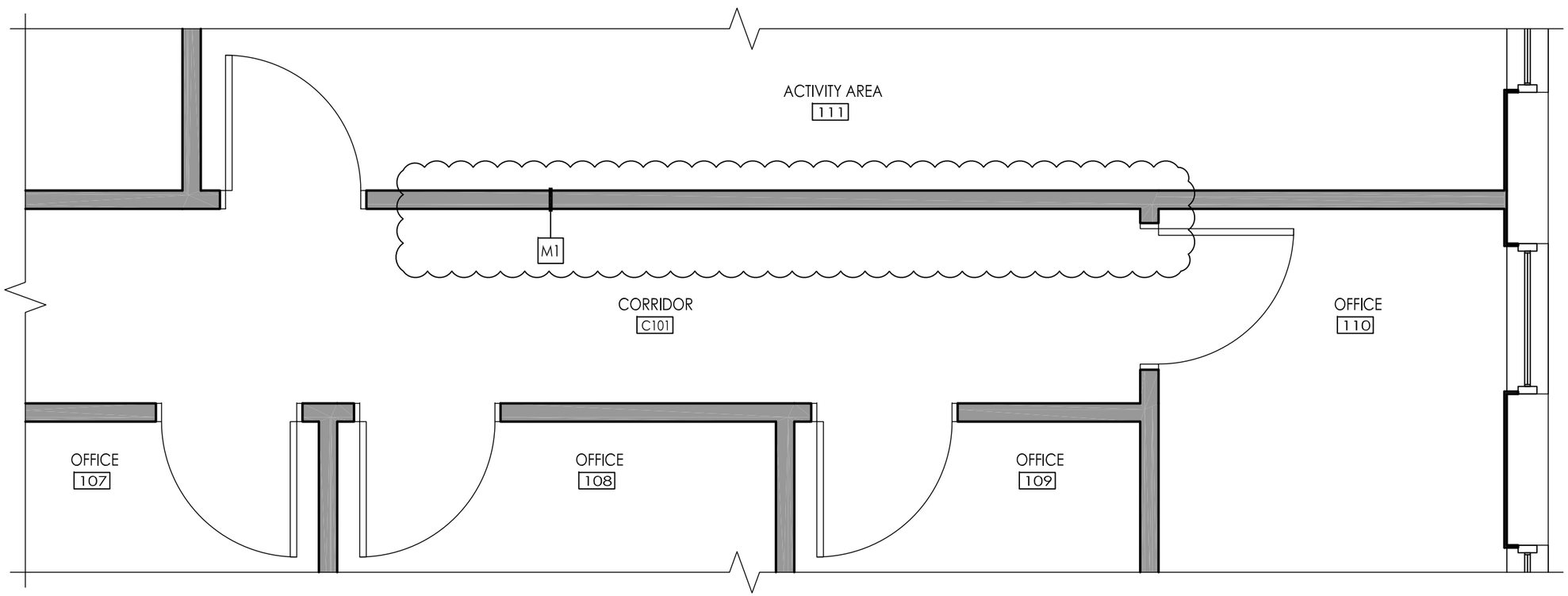

2 ENLARGED FLOOR PLAN @ ACTIVITY 111
SCALE: 3/8" - 1'-0"

AS-BUILT DRAWING

CARENO CONSTRUCTION CO.

PORTONE ARCHITECTS
959 Islington Street
Portsmouth, NH 03801
603.436.8891
info@portonearchitects.com

GARRISON CITY
SPEECH
SUITE #310
INTERIOR FIT-UP

51 WEBB PLACE
DOVER, NH

REMOVAL OF
HALF-WALL @
ACTIVITY 111 AND
CORRIDOR C101

SCALE: AS NOTED
DATE: 10/05/2022

SKA-02

AS-BUILT DRAWING

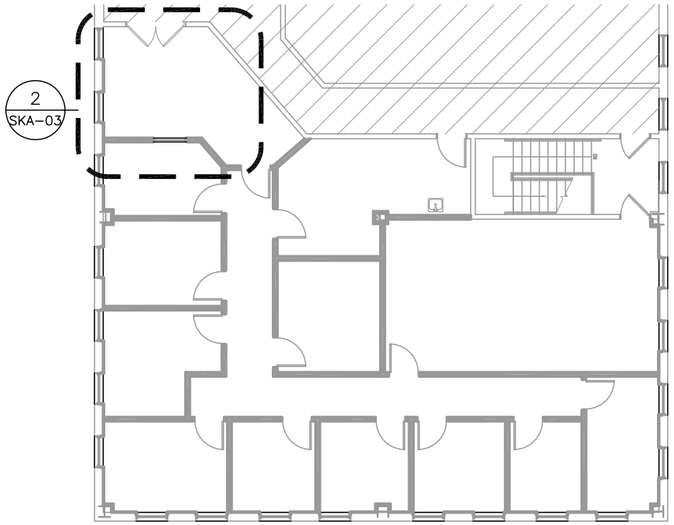

1 BUILDING KEY PLAN
SCALE: 1/16" - 1'-0"

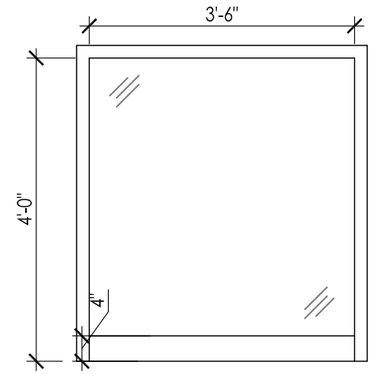

RECEPTION WINDOW - TYPE A
3-SIDED HOLLOW METAL FRAMED
SERVICE WINDOW

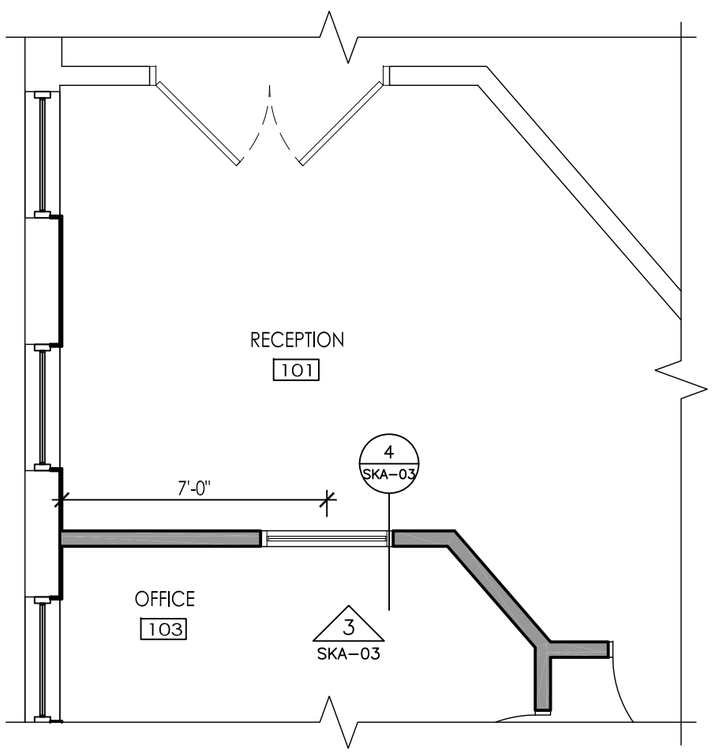

2 ENLARGED FLOOR PLAN @ ACTIVITY 111
SCALE: 1/4" - 1'-0"

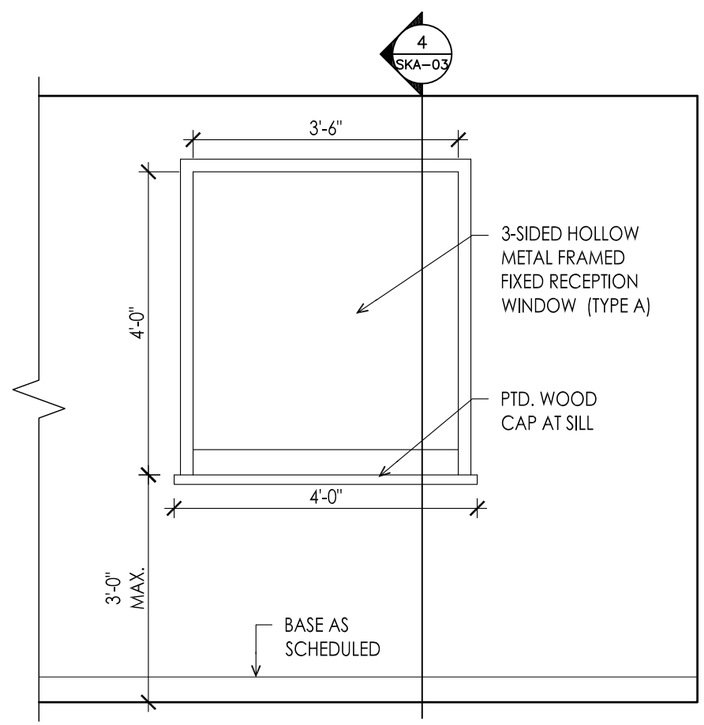

3 INTERIOR ELEVATION
SCALE: 1/2" - 1'-0"

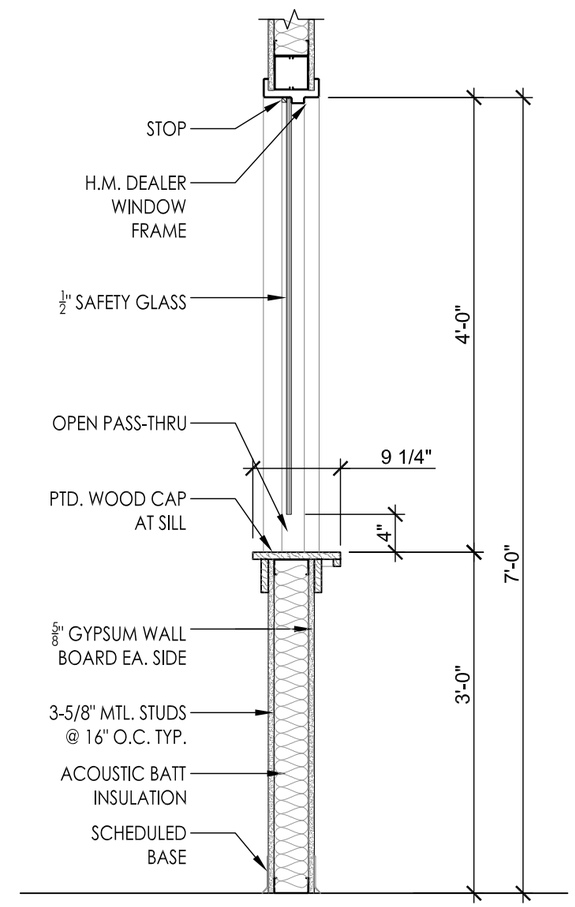

4 SERVICE WINDOW SECTION
SCALE: 3/4" - 1'-0"

CARENO CONSTRUCTION CO.

PORTONE ARCHITECTS
959 Islington Street
Portsmouth, NH 03801
603.436.8891
info@portonearchitects.com

GARRISON CITY
SPEECH
SUITE #310
INTERIOR FIT-UP

51 WEBB PLACE
DOVER, NH

RECEPTION 101
WINDOW

SCALE: AS NOTED
DATE: 10/05/2022

SKA-03

AS-BUILT DRAWING

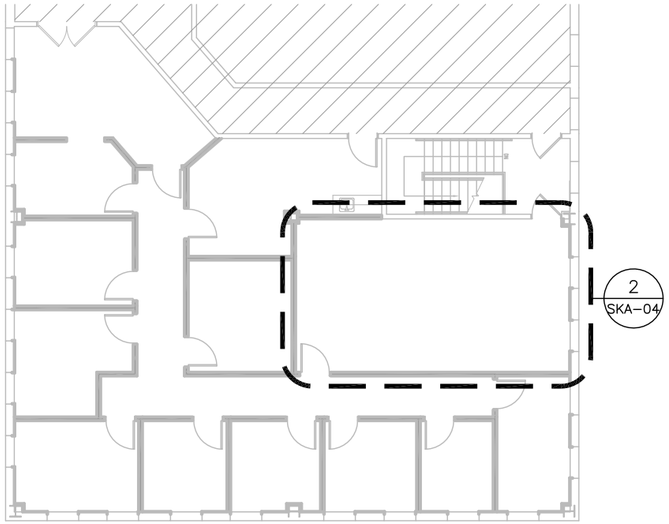

1 BUILDING KEY PLAN
SCALE: 1/16" - 1'-0"

REFLECTED CEILING LEGEND:

GYP 7' - 5"	CEILING TYPE - TO MATCH EXISTING CEILING HEIGHT
	GYP-1: 5/8" TYPE C GYPSUM CEILING BOARD
	ACT-1: 2X2 WHITE ROCKPHON TILE WITH 7300 PRELUDE ML 15/16" GRID
TL1	2x2 TROFFER LED LIGHT FIXTURE
SF1	LITHONIA BLWP4 SUSPENDED WRAP-AROUND LIGHT FIXTURE
EBU1	EMERGENCY BATTERY UNIT WITH MOUNTING BRACKET AND VOLTMETER
	UNIVERSAL MOUNTING EXIT SIGN

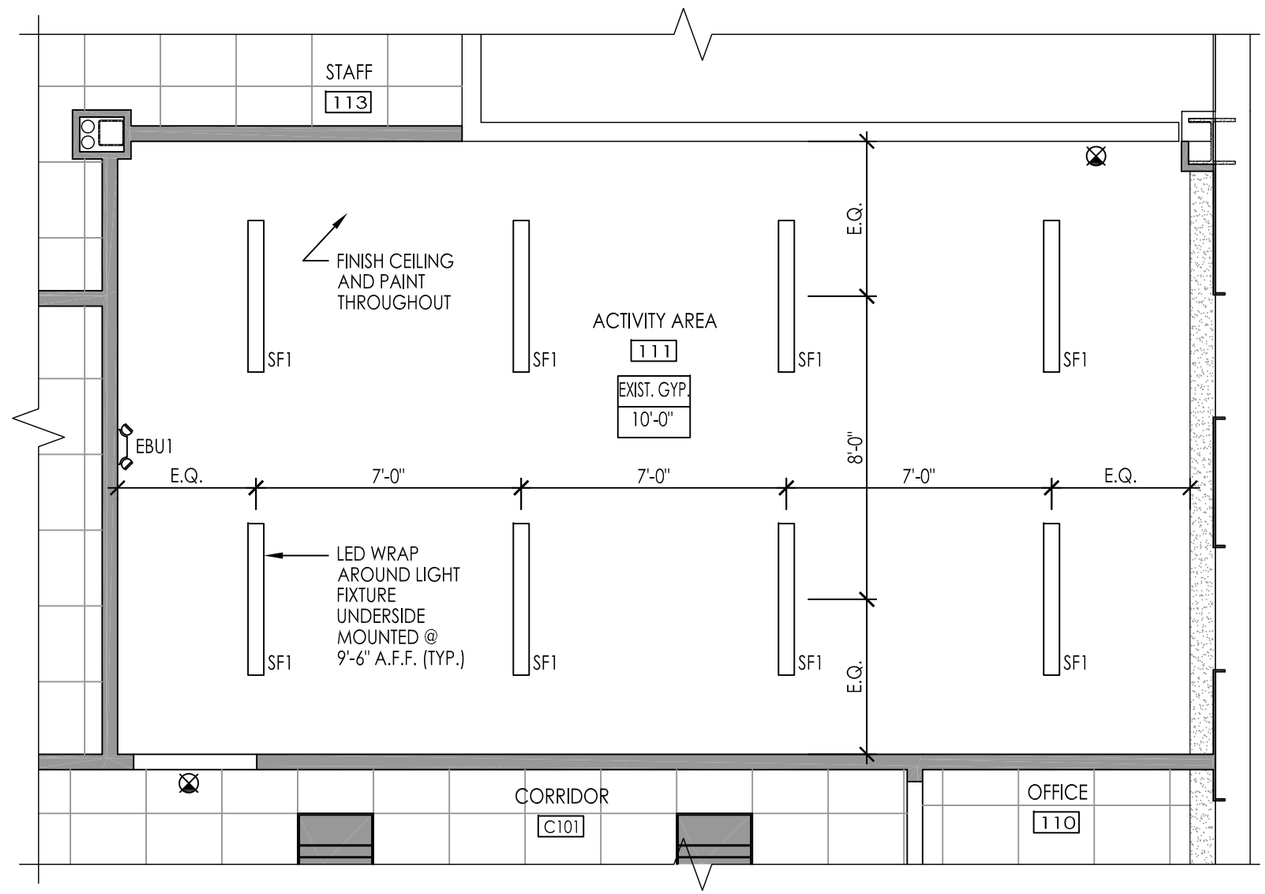

2 ENLARGED REFLECTED CEILING PLAN @ ACTIVITY AREA 111
SCALE: 1/4" - 1'-0"

CARENO CONSTRUCTION CO.

PORTONE ARCHITECTS
959 Islington Street
Portsmouth, NH 03801
603.436.8891
info@portonearchitects.com

GARRISON CITY
SPEECH
SUITE #310
INTERIOR FIT-UP

51 WEBB PLACE
DOVER, NH

ACTIVITY AREA 111
CEILING & LIGHTING
ADJUSTMENT

SCALE: AS NOTED
DATE: 10/05/2022

SKA-04

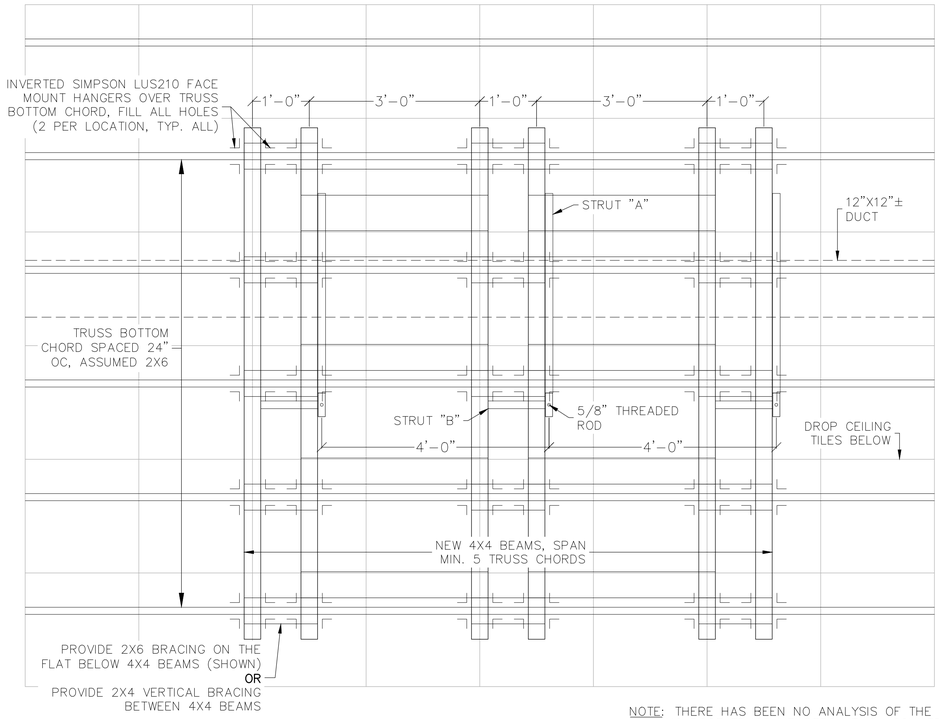

SOUTHPAW SWING FRAMING CONNECTION

1 1/2" = 1'-0"

NOTE: THERE HAS BEEN NO ANALYSIS OF THE EXISTING ROOF TRUSS MEMBERS. IT IS ASSUMED THAT THE EXISTING TRUSSES HAVE THE CAPACITY TO SUPPORT THE ADDITIONAL 500LB WORKING LOAD FROM EACH CEILING SWING.

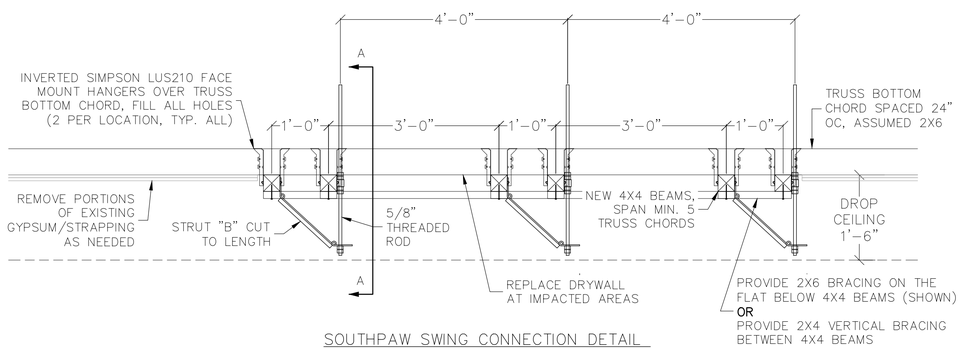

SOUTHPAW SWING CONNECTION DETAIL

1 1/2" = 1'-0"

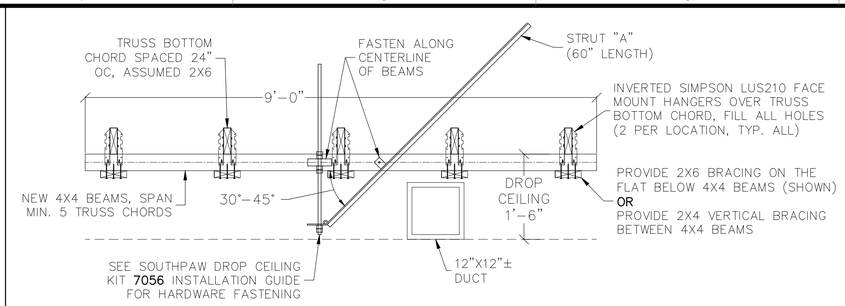

SOUTHPAW SWING SECTION A-A

1 1/2" = 1'-0"

NOTE: STRUT "A" MUST BE ANGLED BETWEEN 30° AND 45°. FINAL PLACEMENT WILL BE BASED ON ACTUAL DROP CEILING DISTANCE. 45° POSITION SHOWN. CONTRACTOR TO POSITION STRUT AS NEEDED FOLLOWING SOUTHPAW INSTALLATION REQUIREMENTS.

NOTE: SIMPSON LUS210 FMH APPLIES TO 2X6 TRUSS BOTTOM CHORD MEMBERS. CONTRACTOR TO VERIFY. CONTACT CIVIL CONSULTANTS IF TRUSS CHORD DIFFERS.

SCOPE OF WORK:

THE INTENT OF THIS PLAN IS TO SHOW THE REQUIRED FRAMING FOR THREE NEW SOUTHPAW CEILING SWING KITS 7056, LOCATED AT GARRISON CITY SPEECH, SUITE #310, 51 WEBB PLACE, DOVER, NH.

GENERAL:

1. LAYOUT SHOWN ON THESE PLANS IS BASED ON INFORMATION PROVIDED BY CARENO CONSTRUCTION AND SOUTHPAW WOOD JOIST 2-1/2 FT. DROP CEILING KIT 7056 PRODUCT INFORMATION.
2. STRUCTURAL WORK SHALL CONFORM TO THE REQUIREMENTS OF THE INTERNATIONAL BUILDING CODE, 2015 EDITION.
3. EXAMINE OTHER TRADE DRAWINGS FOR VERIFICATION OF LOCATION AND DIMENSIONS OF CHASES, INSERTS, OPENINGS, SLEEVES, WASHES, DRIPS, REVEALS, DEPRESSIONS, AND OTHER PROJECT REQUIREMENTS NOT SHOWN ON STRUCTURAL DRAWINGS.
4. THE GENERAL CONTRACTOR SHALL VERIFY ALL EXISTING CONDITIONS AND DIMENSIONS AND SHALL REPORT ANY DISCREPANCIES TO THE ENGINEER IN WRITING. THE GENERAL CONTRACTOR SHALL PROCEED WITH THE WORK ONLY AFTER THE DISCREPANCY HAS BEEN RESOLVED TO THE SATISFACTION OF THE OWNER AND THE ENGINEER.
5. SHOP DRAWINGS FOR REINFORCING STEEL, CONCRETE MIX AND POUR SCHEDULES SHALL BE SUBMITTED TO THE ENGINEER AND A STAMPED APPROVAL RECEIVED BEFORE FABRICATION CAN PROCEED. CONSTRUCTION SHALL BE FROM APPROVED SHOP DRAWINGS ONLY.
6. DETAILS SHOWN ON ANY DRAWINGS ARE TO BE CONSIDERED TYPICAL FOR ALL SIMILAR CONDITIONS, UNLESS OTHERWISE NOTED.
7. WORK FROM GIVEN DIMENSIONS ONLY. SCALE IS INDICATED ON THE DRAWINGS FOR CONVENIENCE ONLY. IT IS NOT INTENDED THAT INFORMATION BE DETERMINED BY SCALING THE DRAWING, SOME ITEMS MAY NOT BE TO THE SCALE SHOWN DUE TO CHANGES.

LIGHT FRAME WOOD CONSTRUCTION NOTES:

1. STRUCTURAL WORK SHALL CONFORM TO THE REQUIREMENTS OF THE INTERNATIONAL BUILDING CODE, 2015 EDITION. A CONTINUOUS LOAD PATH SHALL BE PROVIDED FOR ALL ELEMENTS OF THE FRAMING MEMBERS.
2. DO NOT MIX HOT DIPPED GALVANIZED METAL WITH STAINLESS STEEL.
3. ALL ENGINEERED LUMBER SHALL BE AS SPECIFIED ON THE STRUCTURAL DRAWINGS. ANY DEVIATION WILL REQUIRE REVIEW BY CIVIL CONSULTANTS
4. MINIMUM WALL SHEATHING THICKNESS SHALL BE 1/2" UNLESS INDICATED ON THE STRUCTURAL DRAWINGS.
5. MINIMUM NAILING REQUIREMENTS ARE GIVEN IN 2015 IBC TABLE 2304.10.1.
6. MECHANICAL ANCHORAGE FASTENERS SHALL BE THOSE REQUIRED BY THE MANUFACTURER. DO NOT SUBSTITUTE OTHER FASTENERS UNLESS AUTHORIZED. CARE MUST BE MADE TO VERIFY THE CORRECT NAIL LENGTH AND THICKNESS.
7. CIVIL CONSULTANTS SHALL VISIT SITE AT THE REQUEST OF THE CONTRACTOR PRIOR TO INSTALLATION OF INSULATION AND OR DRYWALL TO INSPECT THE FOLLOWING:
   - INSTALLATION OF ANCHOR / SILL BOLTS
   - INSTALLATION OF MECHANICAL TIE DOWNS AND CONNECTORS SUCH AS STRAPS, JOIST HANGERS, HURRICANE TIES.
   - INSTALLATION OF BRACED WALLS AND STRUCTURAL MEMBERS
8. DEFECTIVE WORK NOT MEETING THE MINIMUM STANDARDS OF THE CODE OR STRUCTURAL DRAWINGS SHALL BE REMOVED AND OR RETROFIT AT THE CONTRACTORS EXPENSE.
9. SIMPSON STRONG TIE CONNECTORS ARE SPECIFICALLY REQUIRED TO MEET THE STRUCTURAL LOAD REQUIREMENTS. PRIOR TO SUBMITTING ANOTHER BRAND, VERIFY LOAD CAPACITY AND USE. PROVIDE CIVIL CONSULTANTS THIS INFORMATION. IF SUBSTITUTION IS GRANTED, CIVIL CONSULTANTS WILL PROVIDE WRITTEN APPROVAL OF SUBSTITUTION.

DESIGN LOADS (PER ASCE 7-10):

DROP CEILING KIT HAS 500 LB WORKING LOAD

AS-BUILT DRAWING

STATE OF NEW HAMPSHIRE
GEOFFREY R. ALENA
No. 14420
LICENSED
PROFESSIONAL ENGINEER
01/05/2023

© CIVIL CONSULTANTS

CIVIL CONSULTANTS
Engineers
Planners
Surveyors
P.O. Box 100
South Berwick
Maine
03908
207-384-2550
www.civcon.com

NO.	REVISIONS	INT.	DATE

RECORD OWNER:

OWNER ADDRESS:

STRUCTURAL PLANS
GARRISON CITY SPEECH
51 WEBB PLACE, SUITE #310
DOVER, NEW HAMPSHIRE

PREPARED FOR:
TODD HARRINGTON
270 WEST ROAD, PORTSMOUTH, NH 03801

CLIENT ADDRESS:

SCALE AS NOTED
0" 1"

DATE: 01/05/2023
DRAWN BY: DRC
CHECKED BY: GRA
APPROVED BY: GRA

CEILING FRAMING DETAILS

PROJECT NO: 22-293.00

SR1

SHEET: 1 OF 1

CADD FILE: J:\aaa\2022\2229300\CARLSON\ENG\DWG\2229300 - SR.dwg

PLOT DATE: 1/5/2023

As-Built
1/19/23

FLOOR PLAN LEGEND

- NOT IN CONTRACT (NIC)
- EXISTING PARTITION TO REMAIN
- NEW PARTITION
- EXISTING DOOR TO REMAIN
- NEW DOOR, FRAME AND/OR HARDWARE

GARRISON

1	OFFICE 4/5 OUTLETS	2	COUNTER GFCI OUTLET
3	OFFICE 6/7 + HALL OUTLETS	4	FRIDGE OUTLET
5	OFFICE 2/3 OUTLETS	6	GYM OUTLETS
7	OFFICE 8/9 OUTLETS	8	STAFF RM + MENS RM OUTLETS
9	RECEPTION OFFICE #1	10	LIGHTS
11	LIGHTS	12	AIR HANDLER
13	LIGHTS	14	
15	HALL + LOBBY OUTLETS	16	PANEL GFCI OUTLET
17	PANEL OUTLET	18	SPACE
19	SPACE	20	SPACE
21	SPACE	22	SPACE
23	SPACE	24	SPACE
25	SPACE	26	SPACE
27	SPACE	28	SPACE
29	SPACE	30	SPACE
31	SPACE	32	SPACE

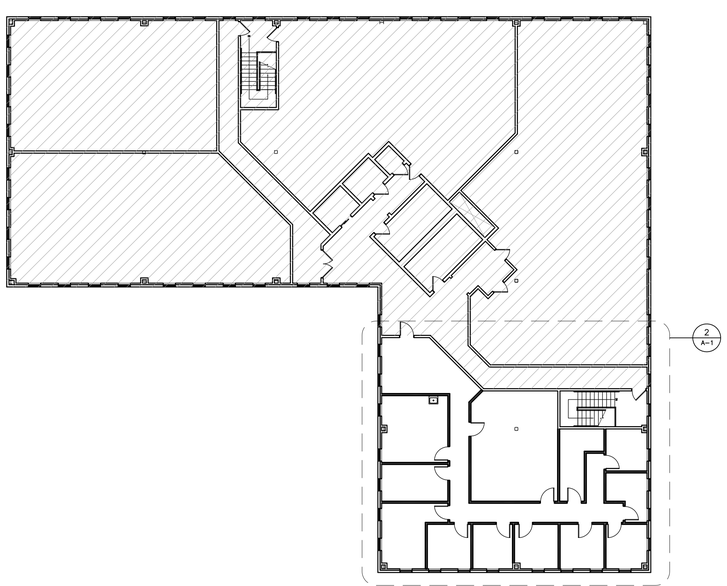

1 THIRD FLOOR KEY PLAN
1/16" = 1'-0"

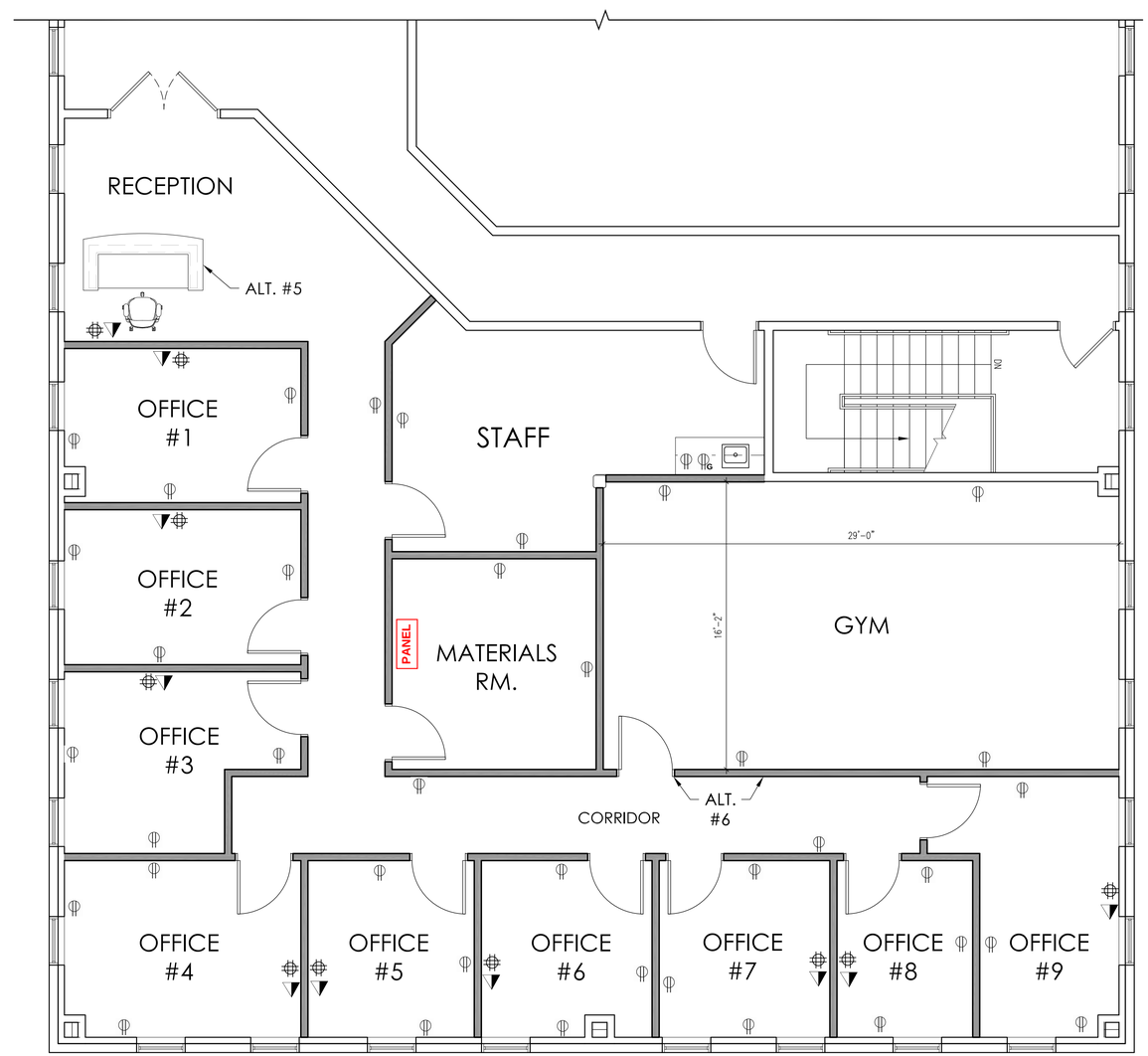

2 THIRD FLOOR PLAN (SUITE 310)
1/4" = 1'-0"

CARENO CONSTRUCTION CO.

Architectural
PORTONE ARCHITECTS
959 Islington Street
Portsmouth, NH 03801
603.436.8891
info@portonearchitects.com
COPYWRIGHT © 2016 BY PORTONE ARCHITECTS, INC.
NO RELEASE WITHOUT PERMISSION

Structural

Fire Protection

Plumbing

HVAC

Electrical

Seal

Rev. No.	Description	Date

Project
GARRISON CITY SPEECH
INTERIOR FIT-UP
51 WEBB PLACE
DOVER, NH

Phase
CONCEPT DESIGN

Project No.
Date

Scale
As Noted

Drawn By: EM
Reviewed By: WD

Sheet Contents
OVERALL FLOOR PLAN & ENLARGED UNIT 310 PLAN

Sheet No.
OPT. B

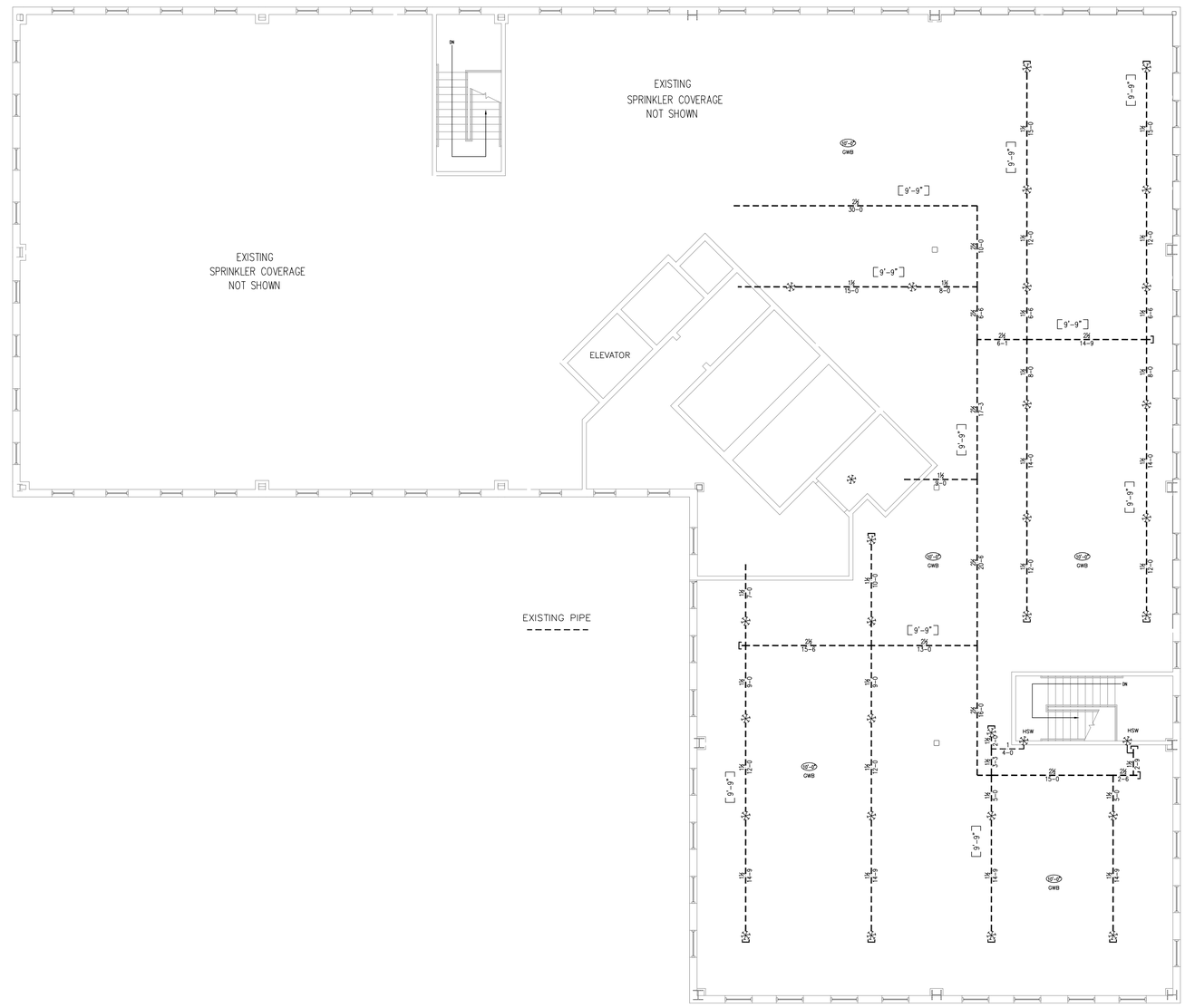

3RD FLOOR EXISTING

SCALE 1/8"=1'-0"

AS-BUILT DRAWING

BRIAN CARTER
DESIGNER
NICET #127646
AUTOMATIC SPRINKLER DESIGN, LEVEL IV

N

JOHN L. CARTER SPRINKLER CO. INC.

9 DUNKLEE ROAD
BOW, NH 03304
(603) 224-5438

General Notes

1. All Pipe Locations are to be Field Measured Prior to Fabrication and Installation by Sprinkler Contractor.
2. All Dimensions Shown are Center to Center.
3. High Temperature Heads are to be Field Located Where Required.
4. All Pipes and Hangers are to be Installed per NFPA #13.
5. Hangers are to be U.L. Listed and F.M. Approved.

Symbols

Symbol	Description
	Hydraulic Reference Points
BTS 8ft	Elev. Below Top of Steel
{ 8-6	Elev. Above Finished Floor
+ (TOS 20-0)	Elev. of Top of Steel
10'-0"	Ceiling Height
	Denotes Hanger Location
o	Rise up or down

Number of Sprinklers

Total This Sheet XX | Total This Job 51

Symbol	Description
	EXISTING QR PENDENT SPRINKLER CHROME

		Revisions:	Date:
Drawing Title	SPRINKLER PLAN 3RD FLOOR EXISTING		
Contract No.	22044		
Drawn By	BC		
Scale	1/8" = 1-0		
Date	10-04-2022		
Approval By			

Job:
51 WEBB PLACE
51 WEBB PLACE
DOVER, NH

Contractor:
CARENO CONST. CO
270 WEST RD SUITE 4
PORTSMOUTH, NH

SHEET 1 OF 2

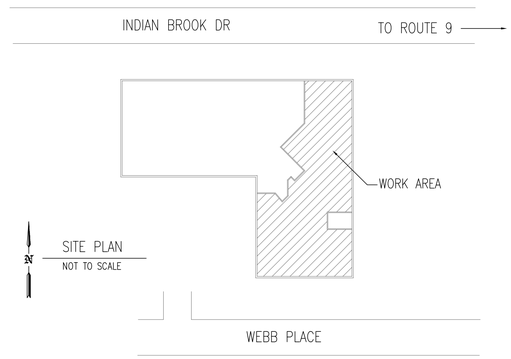

SITE PLAN
NOT TO SCALE

SYSTEM DESIGN

SCOPE OF WORK TO INCLUDE:

* MODIFICATION OF EXISTING WET SPRINKLER SYSTEM.
* ADD/RELOCATE SPRINKLER COVERAGE IN FIT UP AREA TO ACCOMODATE NEW FLOOR AND CEILING PLAN.
* INSTALL NEW PENDENT SPRINKLERS W/ SEMI RECESSED ESCUTCHEONS CENTERED IN 2X2 CEILING GRID.
* INSTALL NEW VIC-FLEX AH2 THD BRAIDED HOSE FIITTIGS.
* NEW WET SYSTEM SPRINKLER PROTECTION BASED ON NFPA 13 2016 LIGHT HAZARD CRITERIA.

GENERAL NOTES

1. NEW PIPING TO BE SCHEDULE 40 BLACK STEEL WITH CAST IRON FITTINGS.
2. PLANS ARE SUBJECT TO MINOR DEVIATIONS ARISING FROM FIELD CONDITIONS AND/OR COORDINATION, MINOR DEVIATIONS WILL NOT AFFECT CODE COMPLIANCE OR SCOPE OF WORK.

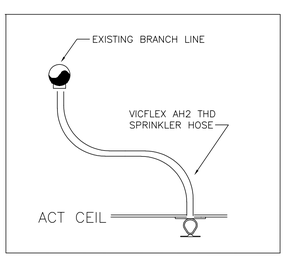

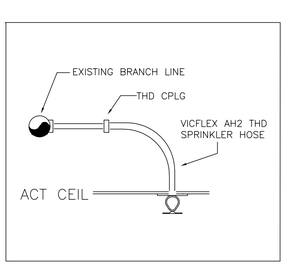

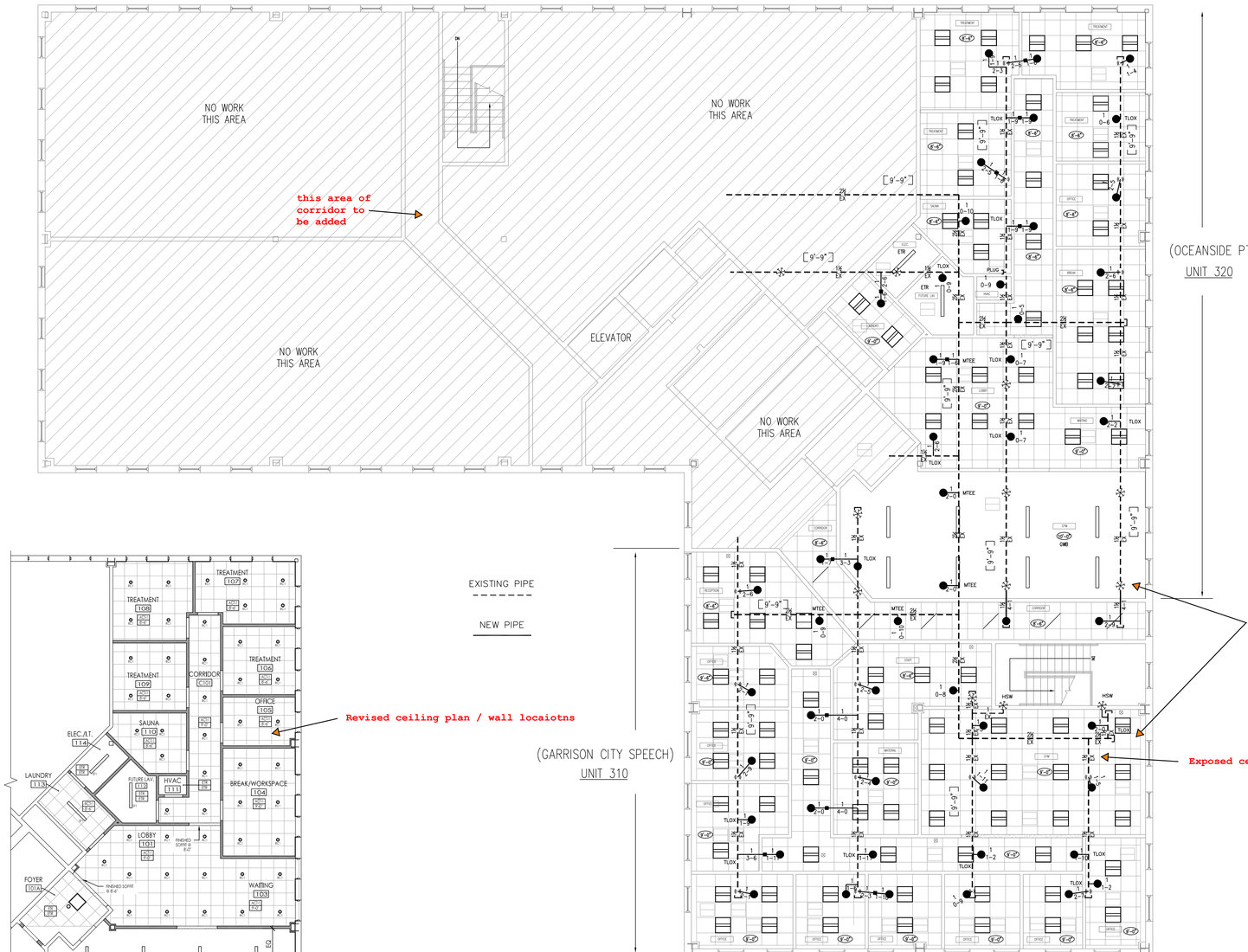

3RD FLOOR FIT UP
SCALE 1/8"=1'-0"

AS-BUILT DRAWING

BRIAN CARTER
DESIGNER
NICET #127646
AUTOMATIC SPRINKLER DESIGN, LEVEL IV

N

JOHN L. CARTER SPRINKLER CO. INC.
9 DUNKLEE ROAD
BOW, NH 03304
(603) 224-5438

General Notes

1. All Pipe Locations are to be Field Measured Prior to Fabrication and Installation by Sprinkler Contractor.
2. All Dimensions Shown are Center to Center.
3. High Temperature Heads are to be Field Located Where Required.
4. All Pipes and Hangers are to be Installed per NFPA #13.
5. Hangers are to be U.L. Listed and F.M. Approved.

Symbols

Symbol	Description
	Hydraulic Reference Points
[375 Elev]	Elev. Below Top of Steel
[8-6]	Elev. Above Finished Floor
+ (TOS 20-0)	Elev. of Top of Steel
(10'-0")	Ceiling Height
	Denotes Hanger Location
o	Rise up or down

Number of Sprinklers

Total This Sheet 51 | Total This Job 51

Symbol	Description
● 51	(1/2",K=5.6) VICTAULIC V2708 QR PEND CHR 200
	EXISTING QR PENDENT SPRINKLER CHROME

Drawing Title	SPRINKLER PLAN 3RD FLOOR FIT UP
Contract No.	22044
Drawn By	BC
Scale	1/8" = 1-0
Date	10-04-2022
Approval By	

Revisions:	Date:

Job:
51 WEBB PLACE
51 WEBB PLACE
DOVER, NH

Contractor:
CARENO CONST. CO
270 WEST RD SUITE 4
PORTSMOUTH, NH

SHEET 2 OF 2